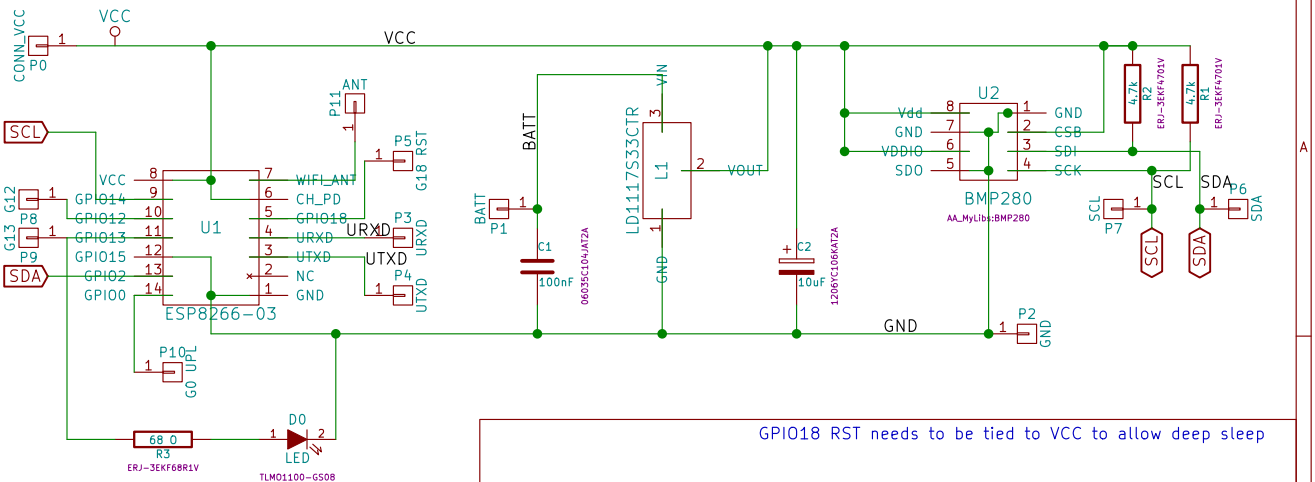
CONN_VCC
P0
VCC
SCL
G12
P8
G13
P9
SDA
VCC
GPIO14
GPIO12
GPIO13
GPIO15
GPIO2
GPIO0
U1
ESP8266-03
WIFI_ANT
CH_PD
GPIO18
URXD
UTXD
NC
GND
ANT
P11
P5
G18 RST
P3
URXD
P4
UTXD
P10
G0 UPL
68 0
R3
ERJ-3EKF68R1V
D0
LED
TLMO1100-GS08
BATT
P1
C1
100nF
06035C104JAT2A
LD1117S33CTR
L1
VIN
VOUT
GND
C2
10uF
1206YC105KAT2A
U2
BMP280
AA_MyLibs:BMP280
Vdd
GND
VDDIO
SDO
CSB
SDI
SCK
R2
4.7k
ERJ-3EKF4701V
R1
4.7k
ERJ-3EKF4701V
SCL
SDA
P7
P6
P2
GND
GPIO18 RST needs to be tied to VCC to allow deep sleep
oxlfe
Sheet: /
File: board.sch
Title: ESP8266 ESP-03 Barometric / Temp Wifi Sensor
Size: User
Date:
Rev: 1
KiCad E.D.A. kicad 0.201412171901+532419ubuntu14.04.1-product
Id: 1/1