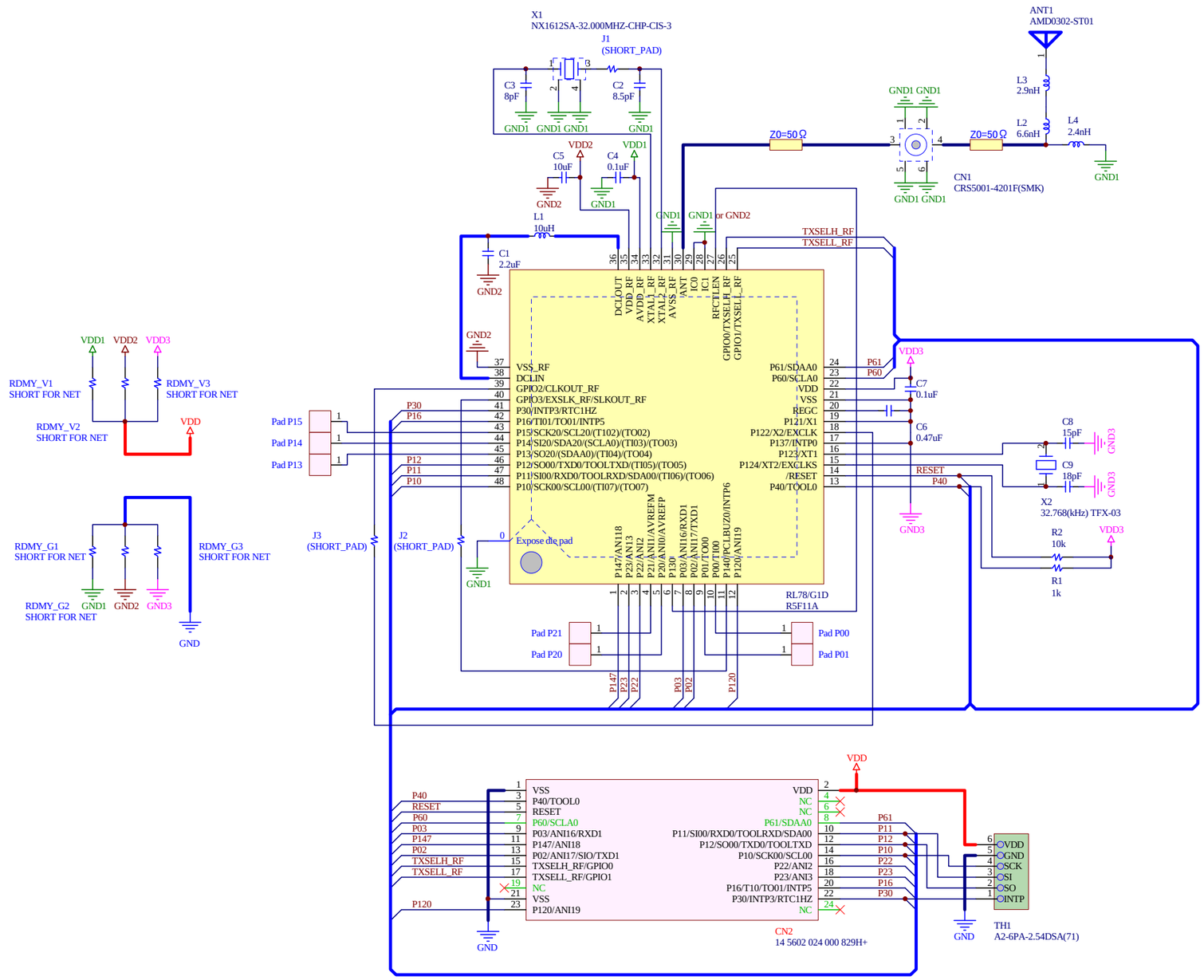

Title	RL78/G1D(R5F11A) Reference Circuit (Target)	
Size A3	Number M504705	Revision VER .1
Date: 17-Mar-2015	Sheet of	
File: C:\Program Files\Design Explorer 99 SE\Library\Pcb\ ‹\"à"¡"d ½BLE.DDB	Drawn by:	