I cannot guarantee correctness, please tell me if there are mistakes and ask if you have questions.

Last updates: 2026-04-17 21:17:40-07:00

Contents

1 Exam 2025 **3**

Solution for Q1-1 . . . 3
Solution for Q1-2 . . . 3
Solution for Q1-3 . . . 4
Solution for Q1-3? . . . 4
Solution for Q1-4 . . . 5
Solution for Q1-5 . . . 6
Solution for Q1-6 . . . 7
Solution for Q1-7 . . . 7
Solution for Q1-8 . . . 8
Solution for Q1-9 . . . 8
Solution for Q2-1 . . . 10
Solution for Q2-2 . . . 11
Solution for Q2-3 . . . 12
Solution for Q2-4 . . . 12
Solution for Q2-4 alternatively . . . 13
Solution for Q2-4? . . . 13

2 Exam 2024 **15**

Solution for Q1-1 . . . 15
Solution for Q1-2 . . . 15
Solution for Q1-3 . . . 16
Solution for Q1-4 . . . 17
Solution for Q1-5 . . . 18
Solution for Q1-6 . . . 18
Solution for Q1-7 . . . 19
Solution for Q1-8 . . . 19
Solution for Q1-9 . . . 19
Solution for Q2-1 . . . 20
Solution for Q2-2 . . . 20
Solution for Q2-3 . . . 20
Solution for Q2-4 . . . 20
Solution for Q2-5 . . . 20

3 Exam 2023 **21**
Solution for Q1-1 . . . 21
Solution for Q1-2-i . . . 22
Solution for Q1-2-ii . . . 22
Solution for Q1-2-iii . . . 22
Solution for Q1-3 . . . 22
Solution for Q1-4 . . . 23
Solution for Q1-5 . . . 23
Solution for Q1-6 . . . 23
Solution for Q1-7 . . . 24
Solution for Q1-8 . . . 24
Solution for Q1-9 . . . 24
Solution for Q1-10 . . . 25
Solution for Q2-1 . . . 26
Solution for Q2-2 . . . 27
Solution for Q2-3 . . . 28
Solution for Q2-4 . . . 28

4 Exam 2022 **29**
Solution for Q1-1 . . . 29
Solution for Q1-2-i . . . 29
Solution for Q1-2-ii . . . 29
Solution for Q1-3 . . . 30
Solution for Q1-4 . . . 30
Solution for Q1-5 . . . 30
Solution for Q1-6 . . . 31
Solution for Q1-7 . . . 32
Solution for Q1-8 . . . 32
Solution for Q1-9 . . . 33
Solution for Q1-10 . . . 33
Solution for Q2-1 . . . 35
Solution for Q2-2 . . . 35
Solution for Q3-1 . . . 36
Solution for Q3-2 . . . 36

1 Exam 2025

Solution for Q1-1

7 axes of rotation so 7 degrees of freedom.
When first joint lines up with the third, it is an arm singularity.
When fifth joint lines up with the 7th joint, it is a wrist singularity.

Solution for Q1-2

$$
\begin{aligned}
{}^0s &= \frac{1}{3}\begin{bmatrix}1\\2\\2\end{bmatrix} \\
{}^0A &= e^{\frac{\pi}{4}{}^0s\times} \\
&= e^{\frac{\pi}{4}\left(\frac{1}{3}\begin{bmatrix}1\\2\\2\end{bmatrix}\right)\times} \\
&= e^{\frac{\pi}{12}\begin{bmatrix}0 & -2 & 2\\2 & 0 & -1\\-2 & 1 & 0\end{bmatrix}}
\end{aligned}
$$

Expand with Rodrigues if there is extra time.:

$$
\begin{aligned}
{}^0A &= e^{\frac{\pi}{12}\begin{bmatrix} 0 & -2 & 2 \\ 2 & 0 & -1 \\ -2 & 1 & 0 \end{bmatrix}} \\
&= I + \sin(\pi/4)\frac{1}{3}\begin{bmatrix} 0 & -2 & 2 \\ 2 & 0 & -1 \\ -2 & 1 & 0 \end{bmatrix} + (1-\cos(\pi/4))\frac{1}{9}\begin{bmatrix} -8 & 2 & 2 \\ 2 & -5 & 4 \\ 2 & 4 & -5 \end{bmatrix} \\
&= I + \frac{\sqrt{2}}{2}\frac{1}{9}\begin{bmatrix} 0 & -6 & 6 \\ 6 & 0 & -3 \\ -6 & 3 & 0 \end{bmatrix} + (1-\frac{\sqrt{2}}{2})\frac{1}{9}\begin{bmatrix} -8 & 2 & 2 \\ 2 & -5 & 4 \\ 2 & 4 & -5 \end{bmatrix} \\
&= \begin{bmatrix} 1+(1-\frac{\sqrt{2}}{2})(\frac{-8}{9}) & \frac{\sqrt{2}}{2}\cdot(\frac{-6}{9})+(1-\frac{\sqrt{2}}{2})(\frac{2}{9}) & \frac{\sqrt{2}}{2}\cdot(\frac{6}{9})+(1-\frac{\sqrt{2}}{2})(\frac{2}{9}) \\ \frac{\sqrt{2}}{2}\cdot(\frac{6}{9})+(1-\frac{\sqrt{2}}{2})(\frac{2}{9}) & 1+(1-\frac{\sqrt{2}}{2})(\frac{-5}{9}) & \frac{\sqrt{2}}{2}\cdot(-3/9)+(1-\frac{\sqrt{2}}{2})(\frac{4}{9}) \\ \frac{\sqrt{2}}{2}\cdot(\frac{-6}{9})+(1-\frac{\sqrt{2}}{2})(\frac{2}{9}) & \frac{\sqrt{2}}{2}\cdot(3/9)+(1-\frac{\sqrt{2}}{2})(\frac{4}{9}) & 1+(1-\frac{\sqrt{2}}{2})(\frac{-5}{9}) \end{bmatrix} \\
&= \begin{bmatrix} \frac{1}{9}+\frac{\sqrt{2}}{2}\cdot\frac{8}{9} & \frac{2}{9}+\frac{\sqrt{2}}{2}\cdot\frac{-8}{9} & \frac{2}{9}+\frac{\sqrt{2}}{2}\cdot\frac{4}{9} \\ \frac{2}{9}+\frac{\sqrt{2}}{2}\cdot\frac{4}{9} & \frac{4}{9}+\frac{\sqrt{2}}{2}\cdot\frac{5}{9} & \frac{4}{9}+\frac{\sqrt{2}}{2}\cdot\frac{-7}{9} \\ \frac{2}{9}+\frac{\sqrt{2}}{2}\cdot\frac{-8}{9} & \frac{4}{9}+\frac{\sqrt{2}}{2}\cdot\frac{-1}{9} & \frac{4}{9}+\frac{\sqrt{2}}{2}\cdot\frac{5}{9} \end{bmatrix}
\end{aligned}
$$

Solution for Q1-3

$$
\begin{aligned}
{}^1C_0 &= \begin{bmatrix} \cos(\pi/4) & \sin(\pi/4) & 0 \\ -\sin(\pi/4) & \cos(\pi/4) & 0 \\ 0 & 0 & 1 \end{bmatrix} \\
{}^1A &= e^{\frac{\pi}{4}{}^1s\times} \\
&= e^{\frac{\pi}{4}({}^1C_0{}^0s)\times} \\
&= \left({}^1C_0\right) e^{\frac{\pi}{4}{}^0s\times} \left({}^0C_1\right) \\
&= \left({}^1C_0\right) \left({}^0A\right) \left({}^1C_0\right)^T
\end{aligned}
$$

Solution for Q1-3?

The question is missing a few words, I'm going to assume that it is given the initial and final, position, velocity and acceleration. And that t goes from 0 to 1.

$$
\begin{aligned}
P(t) &= A + Bt + Ct^2 + Dt^3 + Et^4 + Ft^5 \\
V(t) &= B + 2Ct + 3Dt^2 + 4Et^3 + 5Ft^4 \\
A(t) &= 2C + 6Dt + 12Et^2 + 20Ft^3
\end{aligned}
$$

$$
\begin{bmatrix} P(0) \\ V(0) \\ A(0) \\ P(1) \\ V(1) \\ A(1) \end{bmatrix} = \begin{bmatrix} 1 & 0 & 0 & 0 & 0 & 0 \\ 0 & 1 & 0 & 0 & 0 & 0 \\ 0 & 0 & 2 & 0 & 0 & 0 \\ 1 & 1 & 1 & 1 & 1 & 1 \\ 0 & 1 & 2 & 3 & 4 & 5 \\ 0 & 0 & 2 & 6 & 12 & 20 \end{bmatrix} \begin{bmatrix} A \\ B \\ C \\ D \\ E \\ F \end{bmatrix}
$$

$$
\begin{bmatrix} A \\ B \\ C \\ D \\ E \\ F \end{bmatrix} = \begin{bmatrix} 1 & 0 & 0 & 0 & 0 & 0 \\ 0 & 1 & 0 & 0 & 0 & 0 \\ 0 & 0 & 2 & 0 & 0 & 0 \\ 1 & 1 & 1 & 1 & 1 & 1 \\ 0 & 1 & 2 & 3 & 4 & 5 \\ 0 & 0 & 2 & 6 & 12 & 20 \end{bmatrix}^{-1} \begin{bmatrix} P(0) \\ V(0) \\ A(0) \\ P(1) \\ V(1) \\ A(1) \end{bmatrix}
$$

Solve this for each of the axis separately and coefficient would be shown.

Solution for Q1-4

$$
\begin{aligned}
T &= \frac{1}{2}m\left(\dot{d}_1 - l\sin(\theta_2)\dot{\theta}_2\right)^2 + \frac{1}{2}m\left(l\cos(\theta_2)\dot{\theta}_2\right)^2 + \frac{1}{2}M\dot{d}_1{}^2 \\
&= \frac{1}{2}m\left(\dot{d}_1{}^2 - 2\dot{d}_1 l\sin(\theta_2)\dot{\theta}_2 + l^2\sin^2(\theta_2)\dot{\theta}_2{}^2 + l^2\cos^2(\theta_2)\dot{\theta}_2{}^2\right) + \frac{1}{2}M\dot{d}_1{}^2 \\
&= \frac{1}{2}m\left(\dot{d}_1{}^2 - 2\dot{d}_1 l\sin(\theta_2)\dot{\theta}_2 + l^2\dot{\theta}_2{}^2\right) + \frac{1}{2}M\dot{d}_1{}^2 \\
V &= mgl\sin(\theta_2)
\end{aligned}
$$

$$
\begin{aligned}
L &= T - V \\
L &= \frac{1}{2}m\left(\dot{d}_1{}^2 - 2\dot{d}_1 l\sin(\theta_2)\dot{\theta}_2 + l^2\dot{\theta}_2{}^2\right) + \frac{1}{2}M\dot{d}_1{}^2 - mgl\sin(\theta_2)
\end{aligned}
$$

$$
\begin{aligned}
\frac{d}{dt}\left(\frac{\partial L}{\partial \dot{d}_1}\right) - \frac{\partial L}{\partial d_1} &= f_1 \\
\frac{d}{dt}\left(m\dot{d}_1 - ml\sin(\theta_2)\dot{\theta}_2 + M\dot{d}_1\right) &= f_1 \\
m\ddot{d}_1 - (ml\sin(\theta_2)\ddot{\theta}_2 + ml\cos(\theta_2)\dot{\theta}_2{}^2) + M\ddot{d}_1 &= f_1 \\
m\ddot{d}_1 + M\ddot{d}_1 - ml\sin(\theta_2)\ddot{\theta}_2 - ml\cos(\theta_2)\dot{\theta}_2{}^2 &= f_1 \\
(M+m)\ddot{d}_1 - ml\ddot{\theta}_2\sin(\theta_2) - ml\dot{\theta}_2{}^2\cos(\theta_2) &= f_1
\end{aligned}
$$

$$
\begin{aligned}
\frac{d}{dt}\left(\frac{\partial L}{\partial \dot{\theta}_2}\right) - \frac{\partial L}{\partial \theta_2} &= \tau_2 \\
\frac{d}{dt}\left(-ml\dot{d}_1\sin(\theta_2) + ml^2\dot{\theta}_2\right) - \left(-ml\dot{d}_1\cos(\theta_2)\dot{\theta}_2 - mgl\cos(\theta_2)\right) &= \tau_2 \\
-ml\dot{d}_1\cos(\theta_2)\dot{\theta}_2 - ml\ddot{d}_1\sin(\theta_2) + ml^2\ddot{\theta}_2 + ml\dot{d}_1\cos(\theta_2)\dot{\theta}_2 + mgl\cos(\theta_2) &= \tau_2 \\
-ml\ddot{d}_1\sin(\theta_2) + ml^2\ddot{\theta}_2 + mgl\cos(\theta_2) &= \tau_2 \\
ml^2\ddot{\theta}_2 - ml\ddot{d}_1\sin(\theta_2) + mgl\cos(\theta_2) &= \tau_2
\end{aligned}
$$

Solution for Q1-5

G term is the terms that only dependent on position

$$
G(q) = \begin{bmatrix} 0 \\ mgl\cos(\theta_2) \end{bmatrix}
$$

From the process of Lagrangian, terms that multiply with double derivative of position must only be multiplied with terms with no derivative. Just find their factors.

$$
D(q) = \begin{bmatrix} (M+m) & -ml\sin(\theta_2) \\ -ml\sin(\theta_2) & ml^2 \end{bmatrix}
$$

Solution for Q1-6

$$
\begin{aligned}
d_0(t) &= 0 \\
\dot{d}_0(t) &= 0 \\
\ddot{d}_0(t) &= 0 \\
\theta_0(t) &= -\frac{\pi}{2}\cos\left(\frac{\pi}{T}T\right) \\
\dot{\theta}_0(t) &= \frac{\pi^2}{2T}\sin\left(\frac{\pi}{T}T\right) \\
\ddot{\theta}_0(t) &= \frac{\pi^3}{2T^2}\cos\left(\frac{\pi}{T}T\right)
\end{aligned}
$$

$$
\begin{aligned}
f_1 &= (M+m)\ddot{d}_1 - ml\ddot{\theta}_2\sin(\theta_2) - ml\dot{\theta}_2{}^2\cos(\theta_2) \\
f(t) &= -ml\ddot{\theta}_0(t)\sin(\theta_0(t)) - ml\left(\dot{\theta}_0(t)\right)^2\cos(\theta_0(t))
\end{aligned}
$$

$$
\begin{aligned}
\tau_1 &= ml^2\ddot{\theta}_2 - ml\ddot{d}_1\sin(\theta_2) + mgl\cos(\theta_2) \\
\tau(t) &= ml^2\ddot{\theta}_0(t) + mgl\cos(\theta_0(t))
\end{aligned}
$$

Expansion would take too long, I'm just going to leave it as is.

Solution for Q1-7

PD plus gravity is in joint space.
Given desired q_r and desired $\dot{q}_r$. $e_q = q_r - q$. $e_{qd} = \dot{q}_r - \dot{q}$. Get gravity term from the term on top, call it u_g (this calculated from measured q). $u = kp \cdot e_q + kv \cdot e_{qd} + u_g$
PD plus feedforward is the following.
Given desired q_r and desired $\dot{q}_r$. $e_q = q_r - q$. $e_{qd} = \dot{q}_r - \dot{q}$. Get all the torques from the equations of motion and call that u_{ff}. (this uses desire q, desired $\dot{q}$, and desired $\ddot{q}$)
$u = kp \cdot e_q + kv \cdot e_{qd} + u_{ff}$
PD control is just joint space PD control.
Task space stiffness control is task space pd control.

Computed torque control moves the equations of motion into the loop, but input is still joint space. (the process of moving it in also changes the calculation to go from the desired to measured. Why? Because measured is the correct option and the desired is just a good approximation that can be precomputed outside the loop.)
Resolved acceleration is one step above that and the input is in task space.

Solution for Q1-8

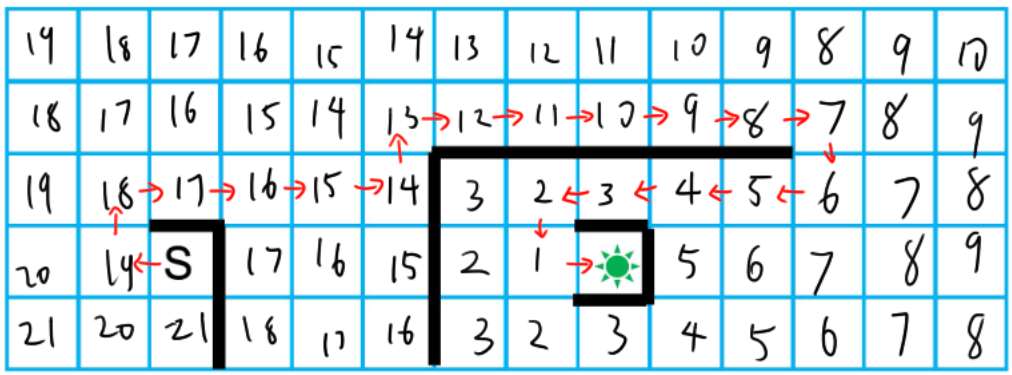

Solution for Q1-9

(i)
Cameras have different parameters, without calibrating, it is hard to know precisely how a pixel gets mapped to a line in 3d space.
Extrinsic parameters are like the displacement and orientation of the camera with respect to some references coordinate frame.
Intrinsic parameters are like the focal length, principal point, field of view, and lens distortion of the camera.
Single simple projective transform ignores lens distortion.
(ii)
Hough transform is an algorithm to process images to identify circle in the image. It is done by transforming each pixel into a circle and added to an accumulator. Then the points in accumulator with high number are likely center of circles. This algorithm can also be used to identify lines. For that, the pixels don't contribute to circles in parameter space but rather inside. Each point in parameter space is a line. Vertical axis is how far the line is from the center and horizontal axis is the angle of the line.
(iii)
Corners are pixels in an image that have some saliency or recognizability. a different description is that it is points with large intensity change in multiple directions.
Binary string descriptors is just the result of brightness comparisons done concatenated

into a binary number. It is used in brief to identify image by going over a patch and checking relative brightness changes between some optimized pairs of pixels.
(iv)
Closing is first dilating then eroding. Since the dilating process expands the white areas, some small black regions may be completely filled out. Then, in the eroding process expands the back regions back out. But since some black regions are completely erased, they won't come back after eroding. The combined effect is as if the black holes in the image are "closed". Opening works exactly oppositely by First making the black regions larger which erases the small white regions. Then, dilating back returns black region to it previous size, but small white regions in the black regions have been erased or "opened". Alternatively, closing removes pepper and opening removes salt.
(v)
A and C can be used as such.
B is not true, but it can help since it averages out the salt and pepper noise in a sense.
D is completely false.

Solution for Q2-1

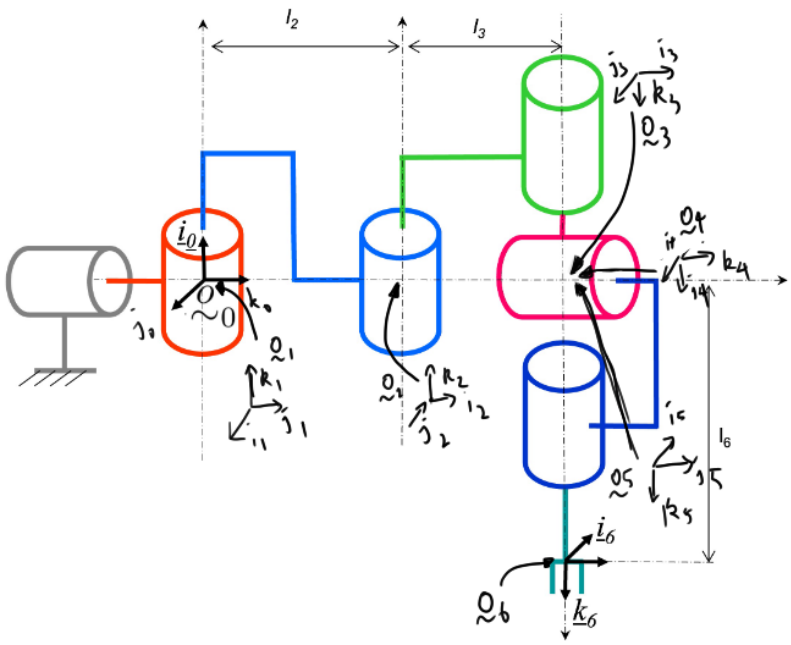

Link	θ	d	a	α
1	$\pi/2+\theta_1$	0	0	$\pi/2$
2	$\pi/2+\theta_2$	0	l_2	0
3	θ_3	0	l_3	π
4	$-\pi/2+\theta_4$	0	0	$\pi/2$
5	$\pi+\theta_5$	0	0	$\pi/2$
6	θ_6	l_6	0	0

Note link 1 is from gray to red.

$$
\begin{aligned}
{}^0T_1 &= \begin{bmatrix} [e^{(\pi/2+\theta_1)k\times}] & [0] \\ [0] & 1 \end{bmatrix} \begin{bmatrix} [e^{(\pi/2)i\times}] & [0] \\ [0] & 1 \end{bmatrix} \\
&= \begin{bmatrix} [e^{(\pi/2+\theta_1)k\times} e^{(\pi/2)i\times}] & [0] \\ [0] & 1 \end{bmatrix}
\end{aligned}
$$

$$
\begin{aligned}
{}^1T_2 &= \begin{bmatrix} [e^{(\pi/2+\theta_2)k\times}] & [0] \\ [0] & 1 \end{bmatrix} \begin{bmatrix} [I_3] & [l_2 i] \\ [0] & 1 \end{bmatrix} \\
&= \begin{bmatrix} [e^{(\pi/2+\theta_2)k\times}] & [e^{(\pi/2+\theta_2)k\times} l_2 i] \\ [0] & 1 \end{bmatrix}
\end{aligned}
$$

$$
\begin{aligned}
{}^2T_3 &= \begin{bmatrix} [e^{(\theta_3)k\times}] & [0] \\ [0] & 1 \end{bmatrix} \begin{bmatrix} [e^{(\pi)i\times}] & [l_2 i] \\ [0] & 1 \end{bmatrix} \\
&= \begin{bmatrix} [e^{(\theta_3)k\times} e^{(\pi)i\times}] & [e^{(\theta_3)k\times} l_2 i] \\ [0] & 1 \end{bmatrix}
\end{aligned}
$$

$$
\begin{aligned}
{}^3T_4 &= \begin{bmatrix} [e^{(-\pi/2+\theta_4)k\times}] & [0] \\ [0] & 1 \end{bmatrix} \begin{bmatrix} [e^{(\pi/2)i\times}] & [0] \\ [0] & 1 \end{bmatrix} \\
&= \begin{bmatrix} [e^{(-\pi/2+\theta_4)k\times} e^{(\pi/2)i\times}] & [0] \\ [0] & 1 \end{bmatrix}
\end{aligned}
$$

$$
\begin{aligned}
{}^4T_5 &= \begin{bmatrix} [e^{(\pi+\theta_5)k\times}] & [0] \\ [0] & 1 \end{bmatrix} \begin{bmatrix} [e^{(\pi/2)i\times}] & [0] \\ [0] & 1 \end{bmatrix} \\
&= \begin{bmatrix} [e^{(\pi+\theta_5)k\times} e^{(\pi/2)i\times}] & [0] \\ [0] & 1 \end{bmatrix}
\end{aligned}
$$

$$
{}^5T_6 = \begin{bmatrix} [e^{(\theta_6)k\times}] & [l_6 k] \\ [0] & 1 \end{bmatrix}
$$

Solution for Q2-2

$$
J = \begin{bmatrix} \underline{k}_0 \times (\underset{\sim}{o}_6 - \underset{\sim}{o}_0) & \underline{k}_1 \times (\underset{\sim}{o}_6 - \underset{\sim}{o}_1) & \underline{k}_2 \times (\underset{\sim}{o}_6 - \underset{\sim}{o}_2) & \underline{k}_3 \times (\underset{\sim}{o}_6 - \underset{\sim}{o}_3) & \underline{k}_4 \times (\underset{\sim}{o}_6 - \underset{\sim}{o}_4) & \underline{k}_5 \times (\underset{\sim}{o}_6 - \underset{\sim}{o}_5) \\ \underline{k}_0 & \underline{k}_1 & \underline{k}_2 & \underline{k}_3 & \underline{k}_4 & \underline{k}_5 \end{bmatrix}
$$

Since $\underset{\sim}{o}_3 = \underset{\sim}{o}_4 = \underset{\sim}{o}_5$, left multiply with

$$
\begin{bmatrix} I & (\underset{\sim}{o}_6 - \underset{\sim}{o}_3)\times \\ 0 & I \end{bmatrix} J = \begin{bmatrix} \underline{k}_0 \times (\underset{\sim}{o}_3 - \underset{\sim}{o}_0) & \underline{k}_1 \times (\underset{\sim}{o}_3 - \underset{\sim}{o}_1) & \underline{k}_2 \times (\underset{\sim}{o}_3 - \underset{\sim}{o}_2) & 0 & 0 & 0 \\ \underline{k}_0 & \underline{k}_1 & \underline{k}_2 & \underline{k}_3 & \underline{k}_4 & \underline{k}_5 \end{bmatrix}
$$

Then the system can be analyzed with arm and wrist singularity separately.
Arm singularity arise when o3 is in the line formed by o0 and k0.
Wrist singularity when k3 and k5 are inline of $\theta_4 = 0$

Solution for Q2-3

Since q0 and q1 can reach point i2 in any direction and the rest can extend l2+l3+l6 away from o0. Then the reachable workspace must have an outer bound of a sphere with radius l2+l3+l6 centered at o0.
The inner radius of the sphere would be the longest arm minus the two smaller arms and if that is negative, the minimum radius is 0. Expressed mathematically:
$\max(\max(l2, l3, l6) - (l2 + l3 + l6 - \max(l2, l3, l6)), 0) = \max(2\max(l2, l3, l6) - l2 - l3 - l6, 0)$

Solution for Q2-4

Due to the spherical wrist, the geometry of the arm and that of the wrist can be analyzed independently.
There are going to be 8 solutions and I will be referring to them as binaries encoding since they are natural.
Wrist center is at $\underset{\sim}{o}_6 - l6\underline{k}_6$.
For o3 to be there, there are four solutions to the arm.
First project $\underset{\sim}{o}_3 - \underset{\sim}{o}_0$ onto the vector $\underline{k}_0$ to get $(\underset{\sim}{o}_3 - \underset{\sim}{o}_0) \parallel \underline{k}_0 = (\underset{\sim}{o}_3 - \underset{\sim}{o}_0) \cdot \underline{k}_0$.
Then subtract it off from $\underset{\sim}{o}_3 - \underset{\sim}{o}_0$ to get $(\underset{\sim}{o}_3 - \underset{\sim}{o}_0) \perp \underline{k}_0 = (\underset{\sim}{o}_3 - \underset{\sim}{o}_0) - (\underset{\sim}{o}_3 - \underset{\sim}{o}_0) \cdot \underline{k}_0\underline{k}_0$
Then use Kahan p1 with $s = j0$ and $t = (\underset{\sim}{o}_3 - \underset{\sim}{o}_0) \perp \underline{k}_0$. Let the result be $|\theta_{0-v0}|$ This give the absolute value of the angle of θ_0 for half of the solutions.
The sign of θ_{0-v0} is the same as $-(\underset{\sim}{o}_3 - \underset{\sim}{o}_0) \cdot \underline{i}_0$.
The other version of the solution, θ_{0-v0} is $\theta_{0-v0} + \pi$
For each solution, calculate the mean angle for θ_2 which is by removing the component of $(\underset{\sim}{o}_3 - \underset{\sim}{o}_0)$ that is perpendicular to $\underline{k}_1$ and using Kahan P1 between that and $\underline{j}_1$ to find the absolute value of angle to move by. Then use dot product between $(\underset{\sim}{o}_3 - \underset{\sim}{o}_0)$ and $-\underline{i}_1$ to determine the sign. This mean angle changes with which solution is being used for $theta_1$
The delta from the mean is $\pi -$ Kahan P4$(a = |\underset{\sim}{o}_3 - \underset{\sim}{o}_0|, b = l_2, c = l_3)$.
Then, using Kahan p4 with a=l2, b=l3, and c $= |\underset{\sim}{o}_3 - \underset{\sim}{o}_0|$, the absolute value of theta 3 can be found.
The first solution is then $\theta_2 = \text{mean} + \text{delta}$ and $\theta_3 = -|\theta_3|$. And the second solution is $\theta_2 = \text{mean} - \text{delta}$ and $\theta_3 = |\theta_3|$
Lastly is the wrist orientation. For any given combination of theta 1, 2, and 3, $\underset{\sim}{o}_3$ and $\underline{C}_3$ are set.
Project k5 onto i3 and j3, calculate the angle formed between j_3 and the projection gives $theta_4$. There are two solutions π apart.
Use Kahan p2, u is k3, w is k5, s is k4, solves for theta 4.
Use Kahan p2, u is i5, w is i6, s is k5 or k6, solves for theta 5.

Solution for Q2-4 alternatively

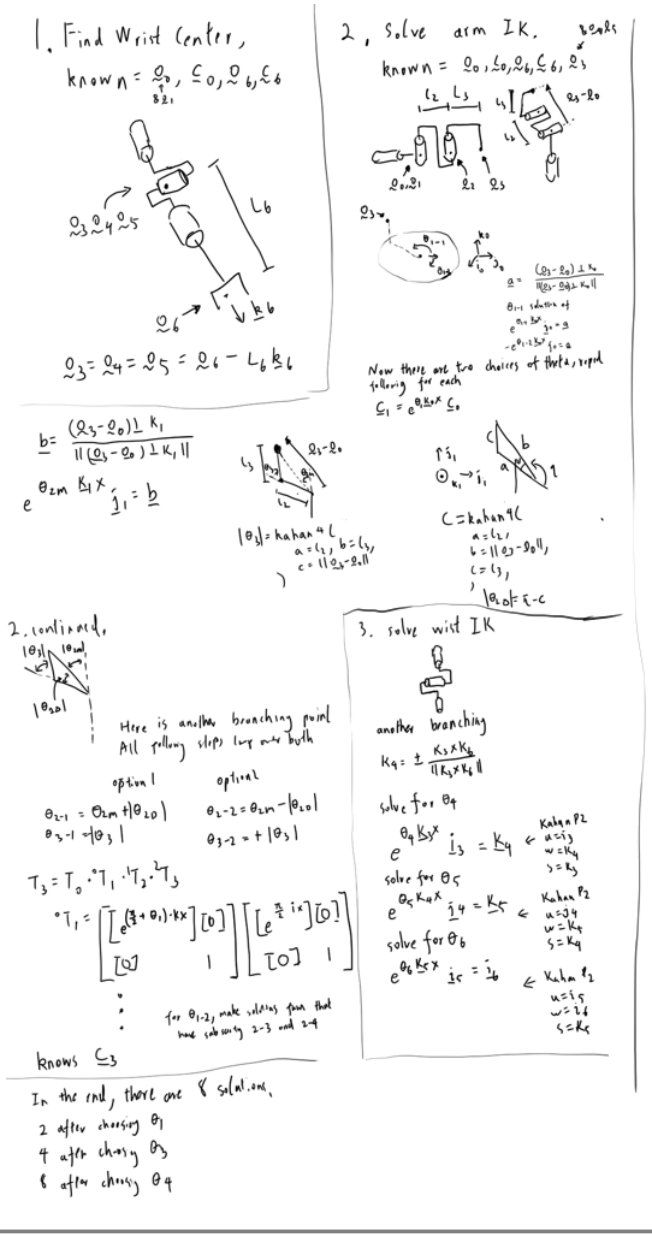

Solution for Q2-4?

This is a task space stiffness controller.

$$
\begin{aligned}
{}^{0}\delta_x &= x_r - x \\
{}^{0}F &= {}^{0}K_p \, {}^{0}\delta x \\
\tau &= J^T \, {}^{0}F
\end{aligned}
$$

$$
\begin{aligned}
{}^{0}\delta_x &= x_r - x \\
{}^{s}\delta x &= {}^{s}C_0 \, {}^{0}\delta x \\
{}^{s}F &= {}^{s}K_p \, {}^{s}\delta x \\
{}^{0}F &= {}^{0}C_s \, {}^{s}F \\
\tau &= J^T \, {}^{0}F
\end{aligned}
$$

2 Exam 2024

Solution for Q1-1

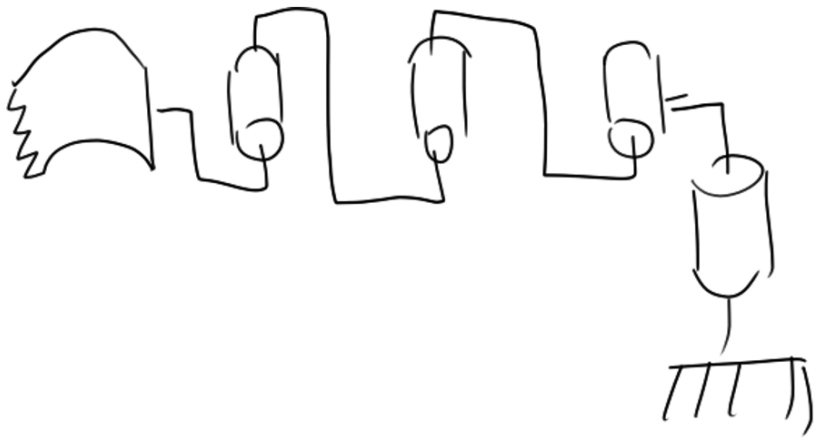

Solution for Q1-2

$$
\begin{aligned}
{}^{5}\omega_{6,5} &= \dot{\theta}_6 k \\
\underline{\omega}_{6,5} &= \underline{C}_5 \dot{\theta}_6 k \\
\underline{\omega}_{6,5} &= \underline{C}_4 e^{\theta_5 k \times} e^{-\psi i \times} \dot{\theta}_6 k \\
\underline{\omega}_{6,5} &= \underline{C}_3 e^{\theta_4 k \times} e^{\psi i \times} e^{\theta_5 k \times} e^{-\psi i \times} \dot{\theta}_6 k \\
{}^{3}\underline{\omega}_{6,5} &= e^{\theta_4 k \times} e^{\psi i \times} e^{\theta_5 k \times} e^{-\psi i \times} \dot{\theta}_6 k
\end{aligned}
$$

$$
\begin{aligned}
{}^4\omega_{5,4} &= \dot{\theta}_5 k \\
\underline{\omega}_{5,4} &= \underline{C}_4 \dot{\theta}_5 k \\
\underline{\omega}_{5,4} &= \underline{C}_3 e^{\theta_4 k \times} e^{\psi i \times} \dot{\theta}_5 k \\
{}^3\underline{\omega}_{5,4} &= e^{\theta_4 k \times} e^{\psi i \times} \dot{\theta}_5 k
\end{aligned}
$$

$$
{}^3\omega_{4,3} = \dot{\theta}_3 k
$$

$$
\begin{aligned}
{}^3\omega_{6,3} &= {}^3\omega_{6,5} + {}^3\omega_{5,4} + {}^3\omega_{4,3} \\
{}^3\omega_{6,3} &= \dot{\theta}_3 k + e^{\theta_4 k \times} e^{\psi i \times} (\dot{\theta}_5 k + e^{\theta_5 k \times} e^{-\psi i \times} \dot{\theta}_6 k)
\end{aligned}
$$

Solution for Q1-3

The question is identical to that in Exam 2025.
I think there is still value so i redid it with different working.
First find the direction to move the end effector to move from $\underset{\sim}{\varrho}_a$ to $\underset{\sim}{\varrho}_b$ which is $(\underset{\sim}{\varrho}_b - \underset{\sim}{\varrho}_a)$.
Second find the axis and angle to rotate such that the effector rotates from $\underline{C}_a$ to $\underline{C}_b$.
Third, decide the profile to move by. This is the step where quintic polynomial comes in as it is the minimum number of degrees such that the initial and final position, velocity, and acceleration can be independently set.
Forth, at every time step, compute the inverse kinematics from for the position and orientation at that time stamps.
The first three steps can be written as the following.

$$
\begin{aligned}
\underset{\sim}{\varrho}_t &= \underset{\sim}{\varrho}_a + s(t)(\underset{\sim}{\varrho}_b - \underset{\sim}{\varrho}_a) \\
\underline{C}_t &= Rot(\underline{C}_a, \hat{u}, s(t)\theta)
\end{aligned}
$$

Where $\underline{C}_b = e^{\theta \hat{u}} \underline{C}_a$, and $s(t) = 0$ at $t = 0$ and $s(t) = 1$ at $t = t_f$.

Solution for Q1-4

The following should be identical to that in Exam 2025.
I think there is still value so i redid it.

$$
\begin{aligned}
T &= \frac{1}{2}M\dot{d_1}^2 + \frac{1}{2}m(\dot{d_1} - l\dot{\theta}_2\sin(\theta_2))^2 + \frac{1}{2}m(l\dot{\theta}_2\cos(\theta_2))^2 \\
&= \frac{1}{2}M\dot{d_1}^2 + \frac{1}{2}m\left((\dot{d_1})^2 - 2l\dot{d_1}\dot{\theta}_2\sin(\theta_2) + (l\dot{\theta}_2\sin(\theta_2))^2 + (l\dot{\theta}_2\cos(\theta_2))^2\right) \\
&= \frac{1}{2}M\dot{d_1}^2 + \frac{1}{2}m\left((\dot{d_1})^2 - 2l\dot{d_1}\dot{\theta}_2\sin(\theta_2) + (l\dot{\theta}_2)^2\right) \\
&= \frac{1}{2}(M+m)\dot{d_1}^2 + \frac{1}{2}m\left(-2l\dot{d_1}\dot{\theta}_2\sin(\theta_2) + (l\dot{\theta}_2)^2\right) \\
V &= mgl\sin(\theta_2)
\end{aligned}
$$

$$
\begin{aligned}
L &= T - V \\
&= \frac{1}{2}(M+m)\dot{d_1}^2 + \frac{1}{2}m\left(-2l\dot{d_1}\dot{\theta}_2\sin(\theta_2) + (l\dot{\theta}_2)^2\right) - mgl\sin(\theta_2)
\end{aligned}
$$

$$
\begin{aligned}
\frac{d}{dt}\left(\frac{\partial L}{\partial \dot{d_1}}\right) - \frac{\partial L}{\partial d_1} &= f_1 \\
\frac{d}{dt}\left((M+m)\dot{d_1} - ml\dot{\theta}_2\sin(\theta_2)\right) - 0 &= f_1 \\
(M+m)\ddot{d_1} - ml\ddot{\theta}_2\sin(\theta_2) - ml\dot{\theta}_2^{\,2}\cos(\theta_2) &= f_1
\end{aligned}
$$

$$
\begin{aligned}
\frac{d}{dt}\left(\frac{\partial L}{\partial \dot{\theta}_2}\right) - \frac{\partial L}{\partial \theta_2} &= \tau_2 \\
\frac{d}{dt}\left(-ml\dot{d_1}\sin(\theta_2) + ml^2\dot{\theta}_2\right) - (-ml\dot{d_1}\dot{\theta}_2\cos(\theta_2) - mgl\cos(\theta_2)) &= \tau_2 \\
-ml\ddot{d_1}\sin(\theta_2) - ml\dot{d_1}\dot{\theta}_2\cos(\theta_2) + ml^2\ddot{\theta}_2 + ml\dot{d_1}\dot{\theta}_2\cos(\theta_2) + mgl\cos(\theta_2) &= \tau_2 \\
ml^2\ddot{\theta}_2 - ml\ddot{d_1}\sin(\theta_2) + mgl\cos(\theta_2) &= \tau_2
\end{aligned}
$$

Solution for Q1-5

The following should be identical to that in Exam 2025.
I think there is still value so i redid it.

$$G(q) = \begin{bmatrix} 0 \\ mgl\cos(\theta_2) \end{bmatrix}$$

$$D(q) = \begin{bmatrix} M+m & -ml\sin(\theta_2) \\ -ml\sin(\theta_2) & ml^2 \end{bmatrix}$$

Solution for Q1-6

The following should be identical to that in Exam 2025.
I think there is still value so i redid it.

$$\begin{aligned} d_0(t) &= 0 \\ \dot{d}_0(t) &= 0 \\ \ddot{d}_0(t) &= 0 \\ \theta_0(t) &= \frac{-\pi}{2}\cos(\frac{\pi}{T}t) \\ \dot{\theta}_0(t) &= \frac{\pi^2}{2T}\sin(\frac{\pi}{T}t) \\ \ddot{\theta}_0(t) &= \frac{\pi^3}{2T^2}\cos(\frac{\pi}{T}t) \end{aligned}$$

$$\begin{aligned} \tau_2 &= ml^2\ddot{\theta}_2 - ml\ddot{d}_1\sin(\theta_2) + mgl\cos(\theta_2) \\ \tau_2 &= ml^2\left[\frac{\pi^3}{2T^2}\cos(\frac{\pi}{T}t)\right] + mgl\cos(\left[\frac{-\pi}{2}\cos(\frac{\pi}{T}t)\right]) \\ f_1 &= (M+m)\ddot{d}_1 - ml\ddot{\theta}_2\sin(\theta_2) - ml\dot{\theta}_2{}^2\cos(\theta_2) \\ f_1 &= -ml\left[\frac{\pi^3}{2T^2}\cos(\frac{\pi}{T}t)\right]\sin(\left[\frac{-\pi}{2}\cos(\frac{\pi}{T}t)\right]) - ml\left[\frac{\pi^2}{2T}\sin(\frac{\pi}{T}t)\right]^2\cos(\left[\frac{-\pi}{2}\cos(\frac{\pi}{T}t)\right]) \end{aligned}$$

Solution for Q1-7

see Exam 2025 q1-7.

Solution for Q1-8

see Exam 2025 q1-8.

Solution for Q1-9

see Exam 2025 q1-9.

Solution for Q2-1

See Exam 2025 q2-1.

Solution for Q2-2

See Exam 2025 q2-2.

Solution for Q2-3

See Exam 2025 q2-3.

Solution for Q2-4

See Exam 2025 q2-4.

Solution for Q2-5

See Exam 2025 q2-5.

3 Exam 2023

Solution for Q1-1

There is a spherical wrist so when axis 5 and axis 7 lines up, there is a singularity. Alternatively, when the center of the spherical joint lines up with axis 1, there is a singularity. (alternative and equivalent is when axis 1, 5, and 7 coincide at same point)

Solution for Q1-2-i

$$
{}^{0}f = \begin{bmatrix} 0 & -c & b \\ c & 0 & -a \\ -b & a & 0 \end{bmatrix}
$$

$$
\begin{bmatrix} 0 & 4 & 3 \\ -4 & 0 & -2 \\ -3 & 2 & 0 \end{bmatrix}
$$

Solution for Q1-2-ii

$$
C_1 = C_0 \, {}^{0}C_1
$$

$$
{}^{0}C_1 = \begin{bmatrix} 1 & 0 & 0 \\ 0 & \frac{1}{\sqrt{2}} & -\frac{1}{\sqrt{2}} \\ 0 & \frac{1}{\sqrt{2}} & \frac{1}{\sqrt{2}} \end{bmatrix}
$$

$$
{}^{1}f = {}^{0}C_1^{\,T} \, {}^{0}f \, {}^{0}C_1
$$

Solution for Q1-2-iii

$$
\sqrt{1+4+9} = \sqrt{14}
$$

$$
e^{\pi/6 \cdot \frac{1}{\sqrt{14}} \cdot \left(\begin{bmatrix} 1 \\ -2 \\ 3 \end{bmatrix} \right) \times}
$$

Solution for Q1-3

$$
{}^{0}w_{3,0} = \dot{\theta}_1 k + e^{\theta_1 k \times} \dot{\theta}_2 j + e^{\theta_1 k \times} e^{\theta_2 j \times} \dot{\theta}_3 i
$$

Solution for Q1-4

First generate the percentage of the way there should the robot be at any given time using a quintic polynomial. Then, at lerp between the positions and slerp between the orientation to find the target position and orientation at that "percent of the way there". Then use the target position and orientation as input to inverse kinematics.
Quintic polynomial is used such that acceleration doesn't change rapidly aka there is no infinite jerk in the planned trajectory.

Solution for Q1-5

$$
\begin{aligned}
T &= \frac{1}{2}m\left(l\dot{\theta}\right)^2 \\
V &= mgl(-\cos\theta) \\
L &= T - V \\
L &= \frac{1}{2}m\left(l\dot{\theta}\right)^2 - mgl(-\cos\theta) \\
L &= \frac{1}{2}m\left(l\dot{\theta}\right)^2 + mgl\cos\theta
\end{aligned}
$$

$$
\begin{aligned}
\frac{d}{dt}\left(\frac{\partial L}{\partial \dot{\theta}}\right) - \frac{\partial L}{\partial \theta} &= \tau \\
\frac{d}{dt}\left(ml^2\dot{\theta}\right) - (-mgl\sin\theta) &= \tau \\
ml^2\ddot{\theta} + mgl\sin\theta &= \tau
\end{aligned}
$$

Solution for Q1-6

$$
\begin{aligned}
\theta &= \pi/2(1 - \cos(\pi/T \cdot t)) \\
\dot{\theta} &= \pi^2/(2T)\sin(\pi/T \cdot t) \\
\ddot{\theta} &= \pi^3/(2T^2)\cos(\pi/T \cdot t)
\end{aligned}
$$

$$\tau = ml^2\ddot{\theta} + mgl\sin\theta$$
$$\tau = ml^2\pi^3/(2T^2)\cos(\pi/T\cdot t) + mgl\sin(\pi/2(1-\cos(\pi/T\cdot t)))$$

Solution for Q1-7

$$G(q) = \begin{bmatrix} m_2 g d_2 \sin(\theta_1) \\ -m_2 g\cos(\theta_1) \end{bmatrix}$$

$$D(q) = \begin{bmatrix} m_2 d_2^2 & 0 \\ 0 & m_2 \end{bmatrix}$$

$$\begin{aligned} T &= \frac{1}{2} v^T D(q) v \\ &= \frac{1}{2}\begin{bmatrix}\dot{\theta}_1 & \dot{d}_2\end{bmatrix}\begin{bmatrix} m_2 d_2^2 & 0 \\ 0 & m_2\end{bmatrix}\begin{bmatrix}\dot{\theta}_1 \\ \dot{d}_2\end{bmatrix} \\ &= \frac{1}{2}\begin{bmatrix}\dot{\theta}_1 & \dot{d}_2\end{bmatrix}\begin{bmatrix} m_2 d_2^2\dot{\theta}_1 \\ m_2\dot{d}_2\end{bmatrix} \\ &= \frac{1}{2} m_2 d_2^2 \dot{\theta}_1{}^2 + \frac{1}{2} m_2 \dot{d}_2{}^2 \end{aligned}$$

Solution for Q1-8

PD plus gravity is in joint space.
Given desired q_r and desired $\dot{q}_r$. $e_q = q_r - q$. $e_{qd} = \dot{q}_r - \dot{q}$. Get gravity term from the term on top, call it u_g (this calculated from measured q). $u = kp \cdot e_q + kv \cdot e_{qd} + u_g$
PD plus feedforward is the following.
Given desired q_r and desired $\dot{q}_r$. $e_q = q_r - q$. $e_{qd} = \dot{q}_r - \dot{q}$. Get all the torques from the equations of motion and call that u_{ff}. (this uses desire q, desired $\dot{q}$, and desired $\ddot{q}$)
$u = kp \cdot e_q + kv \cdot e_{qd} + u_{ff}$

Solution for Q1-9

BFS, not gonna to elaborate.

Solution for Q1-10

The color match experiment is to figure out how human retina responds to the three primaries colors RGB. Given example in class for color processing is to remove the effect of lighting and shadow when trying to identify the road.

Camera calibration is necessary to get both the intrinsic and extrinsic parameters which are (focal length, principle point, field of view, and camera distortion) and (rotation and translation vectors WRT world coordinates). Using the camera calibration tool box, about 20 is needed.

Template matching is used to find some small image in a large image. It can be used to play some 2d video games (like Super Mario bros) to detect the appearance of specific enemies since the sprites are easily known.

Morphological operation of opening is erosion (expanding black regions) followed by dilations (expanding white regions). The combined effect is that the related size of the black and white regions berely changes, but the small white particles are removed from the image. Closing is the exact opposite as it dilates first than erode which removes small black points.

(a), (c) are true. Someone may use (b) to decrease salt and pepper noise followed by a rounding operation. Though morphological operation is more often used. Corners use a different algorithm

Solution for Q2-1

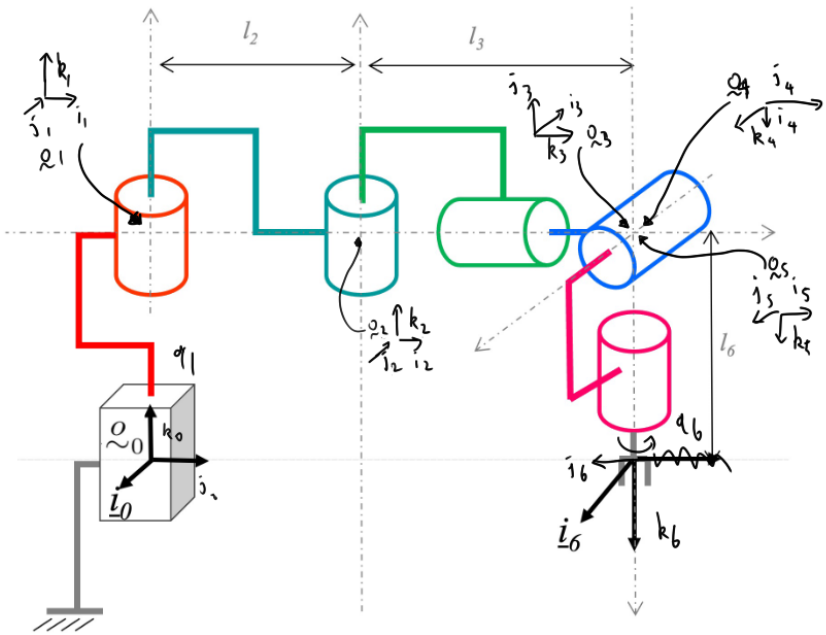

	θ	d	a	α
j0	$\pi/2$	d_1	0	0
j1	θ_2	0	l_2	0
j2	$\pi/2+\theta_3$	0	l_3	$\pi/2$
j3	$-\pi/2+\theta_4$	0	0	$\pi/2$
j4	$\pi/2+\theta_5$	0	0	$\pi/2$
j5	$\pi/2$	l_6	0	0

$$
{}^0T_1 = \begin{bmatrix} [e^{\frac{\pi}{2}k\times}] & [d_1 k] \\ [0] & 1 \end{bmatrix}
$$

$$
\begin{aligned}
{}^1T_2 &= \begin{bmatrix} [e^{\theta_2 k\times}] & [0] \\ [0] & 1 \end{bmatrix} \begin{bmatrix} [I_3] & [l_2 i] \\ [0] & 1 \end{bmatrix} \\
&= \begin{bmatrix} [e^{\theta_2 k\times}] & [e^{\theta_2 k\times} \cdot l_2 i] \\ [0] & 1 \end{bmatrix}
\end{aligned}
$$

$$
\begin{aligned}
{}^2T_3 &= \begin{bmatrix} [e^{(\pi/2+\theta_3)k\times}] & [0] \\ [0] & 1 \end{bmatrix} \begin{bmatrix} [e^{(\pi/2)i\times}] & [l_3 i] \\ [0] & 1 \end{bmatrix} \\
&= \begin{bmatrix} [e^{(\pi/2+\theta_3)k\times} e^{(\pi/2)i\times}] & [e^{(\pi/2+\theta_3)k\times} l_3 i] \\ [0] & 1 \end{bmatrix}
\end{aligned}
$$

$$
\begin{aligned}
{}^3T_4 &= \begin{bmatrix} [e^{(-\pi/2.+\theta_4)k\times}] & [0] \\ [0] & 1 \end{bmatrix} \begin{bmatrix} [e^{(\pi/2)i\times}] & [0] \\ [0] & 1 \end{bmatrix} \\
&= \begin{bmatrix} [e^{(-\pi/2.+\theta_4)k\times} e^{(\pi/2)i\times}] & [0] \\ [0] & 1 \end{bmatrix}
\end{aligned}
$$

$$
\begin{aligned}
{}^4T_5 &= \begin{bmatrix} [e^{(\pi/2.+\theta_5)k\times}] & [0] \\ [0] & 1 \end{bmatrix} \begin{bmatrix} [e^{(\pi/2)i\times}] & [0] \\ [0] & 1 \end{bmatrix} \\
&= \begin{bmatrix} [e^{(\pi/2.+\theta_5)k\times} e^{(\pi/2)i\times}] & [0] \\ [0] & 1 \end{bmatrix}
\end{aligned}
$$

$$
{}^5T_6 = \begin{bmatrix} [e^{\pi/2k\times}] & [l_6 k] \\ [0] & 1 \end{bmatrix}
$$

Solution for Q2-2

$$
J = \begin{bmatrix} k_0 & k_1 \times (\varrho_6 - \varrho_1) & k_2 \times (\varrho_6 - \varrho_2) & k_3 \times (\varrho_6 - \varrho_3) & k_4 \times (\varrho_6 - \varrho_4) & k_5 \times (\varrho_6 - \varrho_5) \\ 0 & k_1 & k_2 & k_3 & k_4 & k_5 \end{bmatrix}
$$

since this is a spherical wrist, the wrist and the arm can be analyzed separately.

$$
\begin{bmatrix} [I_3] & (\varrho_6 - \varrho_3)\times \\ [0] & [I_3] \end{bmatrix} J = \begin{bmatrix} k_0 & k_1 \times (\varrho_3 - \varrho_1) & k_2 \times (\varrho_3 - \varrho_2) & 0 & 0 & 0 \\ 0 & k_1 & k_2 & k_3 & k_4 & k_5 \end{bmatrix}
$$

When $\theta_3 = 0$ or $\theta_3 = \pi$, joint 2 and joint 3 have the same effect, so it is a singularity. (I forgot this in previous practices.)
When $\theta_5 = 0$ or $\theta_5 = \pi$, joint 4 k axis and joint 6 k axis are aligned, so there effect are the same and is a singularity.
(the following are probably not right since i'm not sure what suitable means here)
yes, if the tasks arein one plane, then the first joint does't need to move and saves power. and if all of tasks are in a cylinedarical surface, it would line up with the first two degrees of freedom of the robot.
The reachable workspace is a cylinder with height equal tot he rang eof the prismatic joint and radius l2, l3, l6, plus two capsules on top and bottom with height l6 flat region bounded outside by l3, bounded inside by radius equal to difference of l2 and l3.

the dexerous workspace is a cylinder with height therange of the prismatic joint, and radius equal to l2+l3 - l6. th einside is more complicated. for a unreachable radius of —l2-l3—. —l2-l3—+l6 is not dexerous. top and bottom is too messy.

Solution for Q2-3

walk back wads from o6 by k6 to get to wrist center.
the height of the wrist center is where d1 is.
the distance of the wrist center, as well as l2 and l3, can be passed into kahan 4 to solve for theta 3.
mean of theta 2 can be found with kahan 2 rotating from i2 to o3-o1 using k0.
using pi minus kahan 4 using a being the magneitude of o3-o1 as a, l2 as b, and l3 as c solves for theta 2 delta.
both theta 2 delta and theta 3 are plus minus version but theta2 delta and theta 3 should have opposite sign. so the solution space branched into 2.
project k6 onto i3 and j3 and normalize. the use kahan 2 from j3 to projected k6 around k3 gives one solution for theta 4, adding pi gives another solution for theta 4. so now the solution space has branched into 4.
given variable up to theta 4, using kahan 2 from i5 to k5 using k4 gives the angle for theta 5. this is unique up to mod 2pi.
then rotating from j5 to i6 across k5 gives theta 6. also unique.

Solution for Q2-4

See 2025-v1-q2 last question

4 Exam 2022

Solution for Q1-1

Cannot see exactly which degrees of freedom exist on the bottom gantry.
Left first revolute joint when fully extended gantry and the revolute joint move in same direction. Left second revolute joint when extended straight, the two revolute joints move end effector in same direction.
Right wrist is a spherical wrist. Right wrist inline with shoulder would make shoulder joint degenerate.

Solution for Q1-2-i

$$
\begin{aligned}
{}^0f &= \begin{bmatrix} 0 & -c & b \\ c & 0 & -a \\ -b & a & 0 \end{bmatrix} \\
&= \begin{bmatrix} 0 & 2 & 1 \\ -2 & 0 & 3 \\ -1 & -3 & 0 \end{bmatrix}
\end{aligned}
$$

$$
{}^0C_1 = \begin{bmatrix} 0 & 0 & -1 \\ 0 & 1 & 0 \\ 1 & 0 & 0 \end{bmatrix}
$$

$$
{}^1f = {}^0C_1{}^T\,{}^0f\,{}^0C_1
$$

Solution for Q1-2-ii

$$
{}^0C_2 = e^{\theta \frac{1}{\sqrt{a^2+b^2+c^2}} \begin{bmatrix} a \\ b \\ c \end{bmatrix} \times}
$$

$$^1f = {}^0C_2{}^T\,{}^0f\,{}^0C_2$$

Further expansion would use the Rodrigues equation which would take way too long for 4 marks.

Solution for Q1-3

$Qs = Is$ $(Q - I)s = 0$
The output space of Q-I is necessarily of dimension 2 since component perpendicular to s gets canceled out.
Columns of Q-I are just Q-I applied to basis vectors which also have to lie in the 2d space.
Take two columns of Q-I, normalize them and call them u and v_t. Subscript t for temporary.
Normalize $u \times v_t$ and call it s.
Normalize $s \times u$ and call it v.
Now u v s form a right hand orthonormal basis.
$Qu \cdot u$ is then the cosine of the angle. $Qu \cdot v$ is then the sine of the angle.
Use atan2 and the angle is found.
For the other solution, negate both s and theta works too.

Solution for Q1-4

$1/2mv^2 + 1/2\omega^T J_c \omega$
where $v = \dot{c}(t)$ and $\dot{Q} = \omega \times Q$

Solution for Q1-5

$$\begin{aligned} T &= \frac{1}{2}m\left(l\dot{\theta}\right)^2 \\ V &= mgl\cos(\theta) \\ L &= T - V \\ &= \frac{1}{2}m\left(l\dot{\theta}\right)^2 - mgl\cos(\theta) \end{aligned}$$

$$\frac{d}{dt}\left(\frac{\partial L}{\partial \dot{\theta}}\right) - \frac{\partial L}{\partial \theta} = \tau$$
$$\frac{d}{dt}\left(ml^2\dot{\theta}\right) - mgl\sin(\theta) = \tau$$
$$ml^2\ddot{\theta} - mgl\sin(\theta) = \tau$$

Solution for Q1-6

$$\theta_d(t) = \begin{cases} \frac{\pi}{2}t^2 & \text{if } 0 \le t \le 1 \\ \pi - \frac{\pi}{2}(t-2)^2 & \text{if } 1 \le t \le 2 \\ \pi & \text{if } 2 \le t \end{cases} \dot{\theta}_d(t) = \begin{cases} \pi t & \text{if } 0 \le t \le 1 \\ -\pi(t-2) & \text{if } 1 \le t \le 2 \\ 0 & \text{if } 2 \le t \end{cases} \ddot{\theta}_d(t) = \begin{cases} \pi & \text{if } 0 \le t \le 1 \\ -\pi & \text{if } 1 \le t \le 2 \\ 0 & \text{if } 2 \le t \end{cases}$$

$$\tau = ml^2\ddot{\theta} - mgl\sin(\theta)$$
$$\tau = ml^2\ddot{\theta}_d - mgl\sin(\theta_d)$$
$$\tau = \begin{cases} ml^2\pi - mgl\sin(\frac{\pi}{2}t^2) & \text{if } 0 \le t \le 1 \\ ml^2(-\pi) - mgl\sin(\pi - \frac{\pi}{2}(t-2)^2) & \text{if } 1 \le t \le 2 \\ 0 & \text{if } 2 \le t \end{cases}$$
$$\tau = \begin{cases} ml^2\pi - mgl\sin(\frac{\pi}{2}t^2) & \text{if } 0 \le t \le 1 \\ -ml^2\pi - mgl\sin(\frac{\pi}{2}(t-2)^2) & \text{if } 1 \le t \le 2 \\ 0 & \text{if } 2 \le t \end{cases}$$

Solution for Q1-7

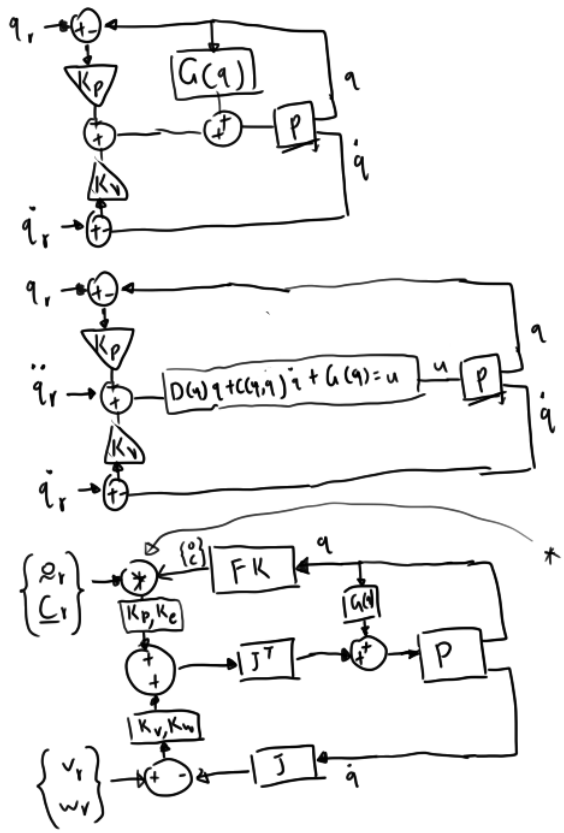

$$\begin{bmatrix} d \\ e \end{bmatrix} = \begin{bmatrix} \underline{o}_r - \underline{o} \\ \frac{1}{2}(\underline{i}_r \times \underline{i} + \underline{j}_r \times \underline{j} + \underline{k}_r \times \underline{k}) \end{bmatrix}$$

Solution for Q1-8

See yr 2025...

Solution for Q1-9

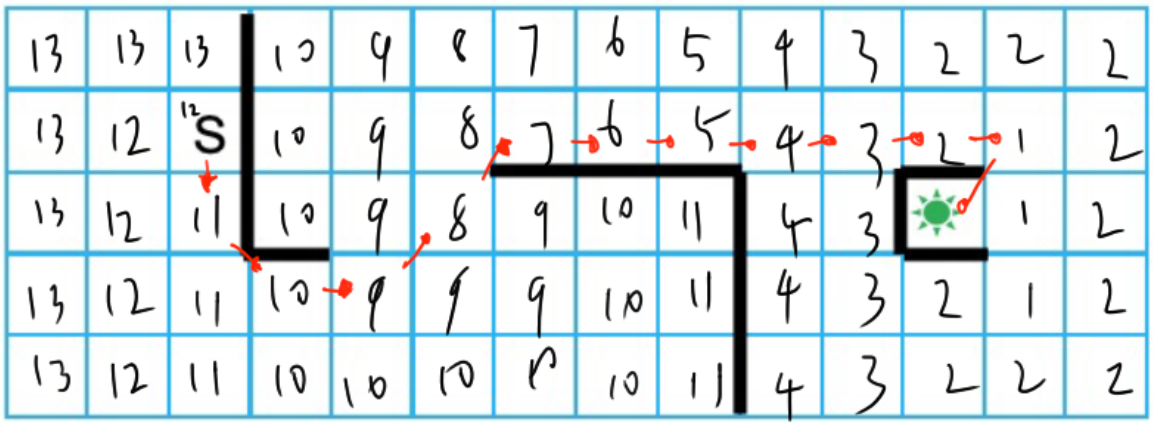

Similar to 2025 example. This is just an example where diagonal move is allowed.

Solution for Q1-10

(a)
Extrinsic parameter are the camera position and orientation relative to some knows coordinate frame.
Intrinsic parameters are things like the principle point, for, focal length, and lens distortion.
Camera parameters vary a lot and is only with calibration can the relation between a pixel on screen to a ray in 3d space be known.

(b)

$$\begin{bmatrix} -1 & 0 & 1 \\ -1 & 0 & 1 \\ -1 & 0 & 1 \end{bmatrix}$$

(c) color matching is an experiment where the participants see two boxes. On one side is a monochromatic light and on the other side is some mixture of the three primary lights. The result is the underlying theory how we perceive light and how RGB displays are designed and calibrated. Probably also the base theory use to calibrate Pantone colors.

(d) See y2025-v1-q1-9-iv
TLDR: closing is convolution and max (dilate), followed by convolution and min (erode) or vice versa for opening. to removes pepper and salt noises respectively.

(e) See y2024-v1-q1-9-ii
TLDR: pixel space to parameter space. Identify linear features. An extension also identifies circular features.

Solution for Q2-1

Solution for Q2-2

$$
\begin{aligned}
{}^{0}C_1 &= e^{\theta_1 k\times} e^{\frac{\pi}{2} i\times} \\
{}^{1}C_2 &= e^{\theta_2 k\times} e^{-\frac{\pi}{2} i\times} \\
{}^{2}C_3 &= e^{-\frac{\pi}{2} k\times}
\end{aligned}
$$

$$
\begin{aligned}
\underline{\omega}_{3,0} &= \dot{\theta}_1 \underline{k}_0 + \dot{\theta}_2 \underline{k}_1 \\
{}^{1}\omega_{3,0} &= \dot{\theta}_1 \, {}^{0}C_1{}^{T} k + \dot{\theta}_2 k \\
{}^{1}\omega_{3,0} &= \dot{\theta}_1 \left[e^{\theta_1 k\times} e^{\frac{\pi}{2} i\times} \right]^T k + \dot{\theta}_2 k \\
{}^{1}\omega_{3,0} &= \dot{\theta}_1 \left[e^{-\frac{\pi}{2} i\times} e^{-\theta_1 k\times} \right] k + \dot{\theta}_2 k \\
{}^{1}\omega_{3,0} &= \dot{\theta}_1 e^{-\frac{\pi}{2} i\times} e^{-\theta_1 k\times} k + \dot{\theta}_2 k
\end{aligned}
$$

Solution for Q3-1

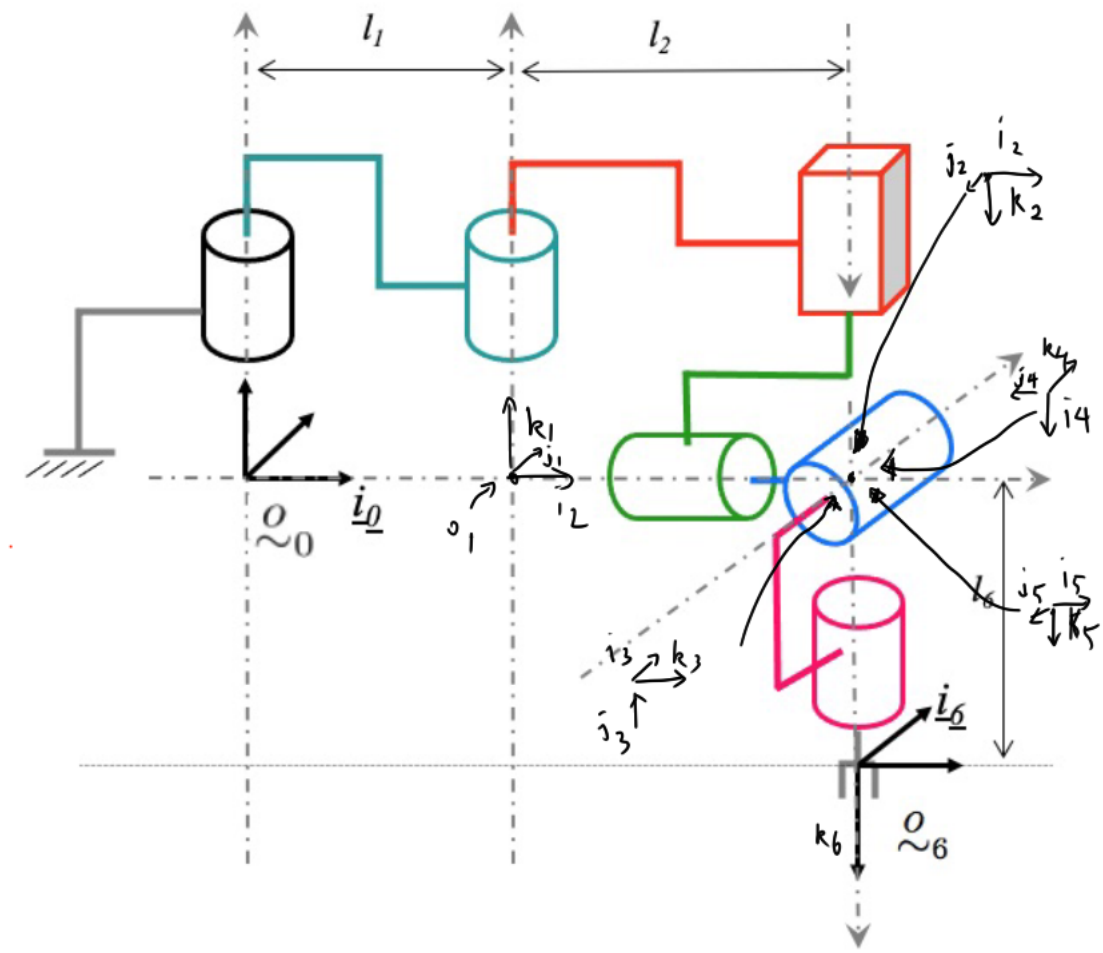

I don't think I actually need to generate DH table for this?
Coordinate free form, very standard axis.
Singularity when $\theta_2 = 0$ or π which is elbow singularity. And when $\theta_5 = \pi/2$ or $3\pi/2$ which is a wrist singularity

Solution for Q3-2

Walk back from o6 by k3 l6 to find o3.
Project o3-o0 to plane perpendicular to k3.
Use Kahan p4 to find theta 2 and theta 1. There is a branching here.
Project o3-o0 onto k3, this is d3.
With first three, C3 is known.

$\underline{k}_4 = \pm \underline{k}_3 \times \underline{k}_6 k4$ There is branching here.
Use Kahan p2 to rotate i3 to k4 through k3 gives theta 4.
Use Kahan p2 to rotate i4 to k5 through k4 gives theta 5.
Use Kahan p2 to rotate i5 to j6 though k5 gives theta 6.