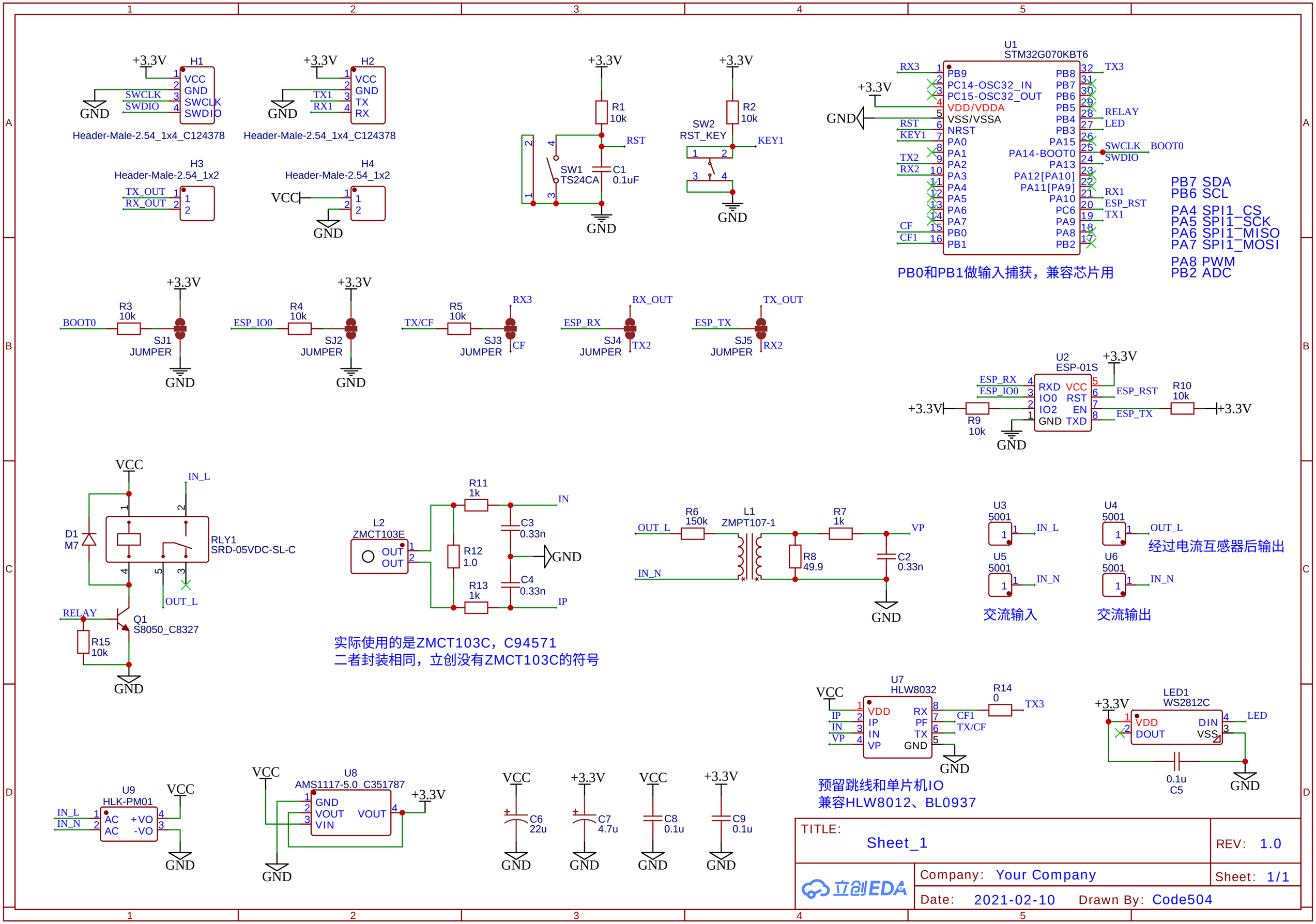
H1
Header-Male-2.54_1x4_C124378
VCC
GND
SWCLK
SWDIO
H2
Header-Male-2.54_1x4_C124378
TX1
RX1
TX
RX
H3
Header-Male-2.54_1x2
TX_OUT
RX_OUT
H4
Header-Male-2.54_1x2
VCC
GND
+3.3V
R1
10k
RST
SW1
TS24CA
C1
0.1uF
SW2
RST_KEY
R2
10k
KEY1
U1
STM32G070KBT6
RX3
PB9
PC14-OSC32_IN
PC15-OSC32_OUT
VDD/VDDA
VSS/VSSA
NRST
PA0
PA1
PA2
PA3
PA4
PA5
PA6
PA7
PB0
PB1
PB8
PB7
PB6
PB5
PB4
PB3
PA15
PA14-BOOT0
PA13
PA12[PA10]
PA11[PA9]
PA10
PC6
PA9
PA8
PB2
TX3
RELAY
LED
SWCLK
SWDIO
BOOT0
RX1
ESP_RST
TX1
TX2
RX2
CF
CF1
PB0和PB1做输入捕获，兼容芯片用
PB7 SDA
PB6 SCL
PA4 SPI1_CS
PA5 SPI1_SCK
PA6 SPI1_MISO
PA7 SPI1_MOSI
PA8 PWM
PB2 ADC
R3
10k
BOOT0
SJ1
JUMPER
R4
10k
ESP_IO0
SJ2
JUMPER
R5
10k
TX/CF
SJ3
JUMPER
CF
ESP_RX
SJ4
JUMPER
TX2
ESP_TX
SJ5
JUMPER
RX2
U2
ESP-01S
RXD
IO0
IO2
GND
VCC
RST
EN
TXD
R9
10k
R10
10k
D1
M7
RLY1
SRD-05VDC-SL-C
IN_L
OUT_L
Q1
S8050_C8327
R15
10k
L2
ZMCT103E
OUT
R11
1k
R12
1.0
R13
1k
C3
0.33n
C4
0.33n
IN
IP
实际使用的是ZMCT103C，C94571
二者封装相同，立创没有ZMCT103C的符号
R6
150k
L1
ZMPT107-1
R7
1k
R8
49.9
C2
0.33n
VP
IN_N
U3
5001
U4
5001
U5
5001
U6
5001
经过电流互感器后输出
交流输入
交流输出
U7
HLW8032
VDD
IP
IN
VP
RX
PF
TX
CF1
TX/CF
R14
0
LED1
WS2812C
DIN
DOUT
VSS
0.1u
C5
预留跳线和单片机IO
兼容HLW8012、BL0937
U9
HLK-PM01
AC
+VO
-VO
U8
AMS1117-5.0 C351787
VOUT
C6
22u
C7
4.7u
C8
0.1u
C9
0.1u
TITLE:
Sheet_1
REV: 1.0
Company: Your Company
Sheet: 1/1
Date: 2021-02-10
Drawn By: Code504
立创EDA