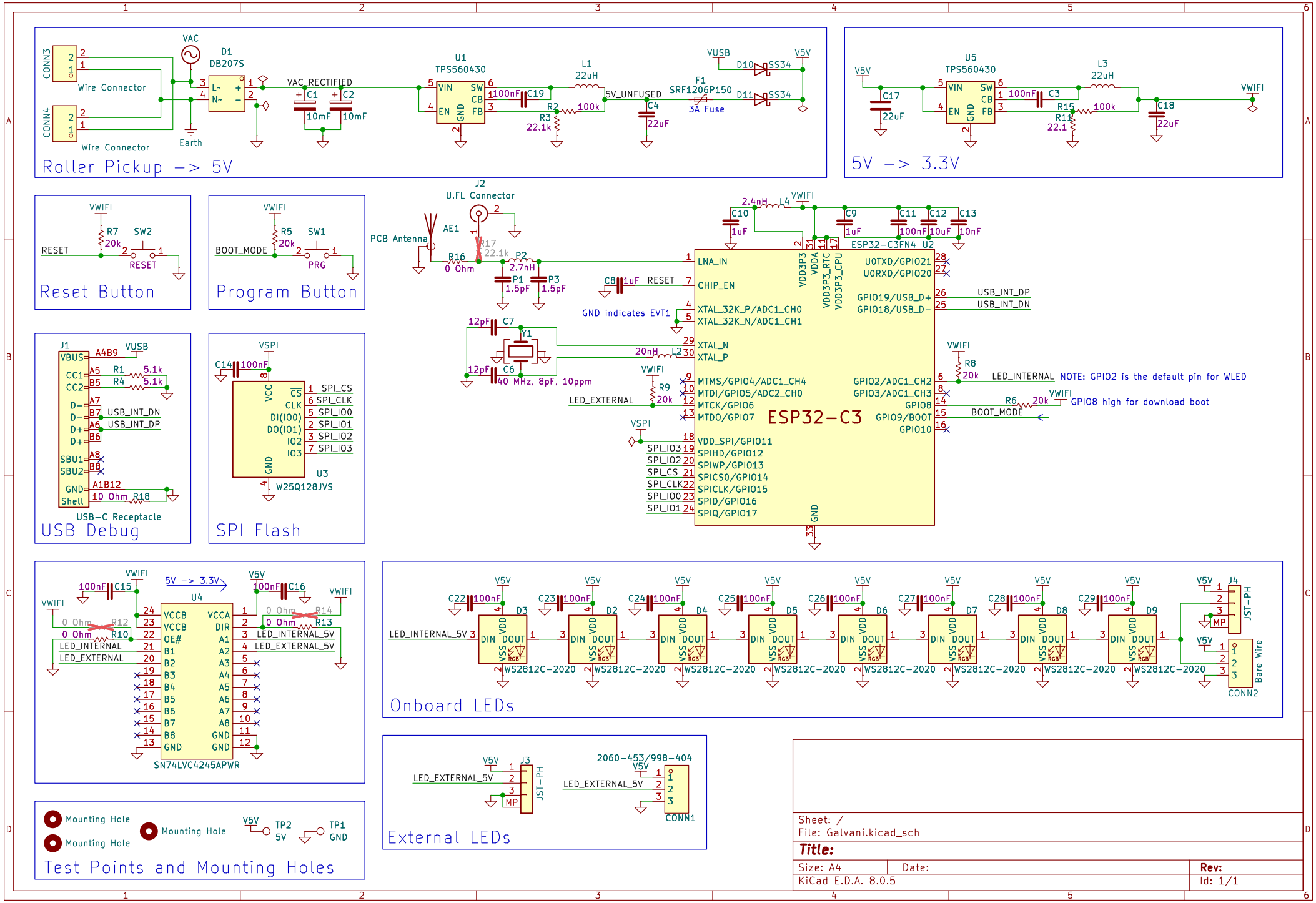
Roller Pickup -> 5V
CONN3
CONN4
Wire Connector
Wire Connector
VAC
Earth
D1
DB207S
VAC_RECTIFIED
C1
C2
10mF
10mF
U1
TPS560430
VIN
SW
CB
EN
GND
FB
C19
100nF
L1
22uH
R2
100k
R3
22.1k
5V_UNFUSED
C4
22uF
F1
SRF1206P150
3A Fuse
VUSB
D10
SS34
D11
SS34
V5V
5V -> 3.3V
V5V
C17
22uF
U5
TPS560430
L3
22uH
C3
100nF
R15
100k
R11
22.1
C18
22uF
VWIFI
Reset Button
VWIFI
R7
20k
SW2
RESET
RESET
Program Button
VWIFI
R5
20k
SW1
BOOT_MODE
PRG
J2
U.FL Connector
PCB Antenna
AE1
R16
0 Ohm
R17
22.1k
P2
2.7nH
P1
1.5pF
P3
1.5pF
C8
1uF
RESET
GND indicates EVT1
12pF
C7
Y1
12pF
C6
40 MHz, 8pF, 10ppm
20nH
L2
VWIFI
R9
20k
LED_EXTERNAL
VSPI
2.4nH
L4
VWIFI
C10
1uF
C9
1uF
C11
100nF
C12
10uF
C13
10nF
ESP32-C3FN4
U2
LNA_IN
CHIP_EN
XTAL_32K_P/ADC1_CH0
XTAL_32K_N/ADC1_CH1
XTAL_N
XTAL_P
MTMS/GPIO4/ADC1_CH4
MTDI/GPIO5/ADC2_CH0
MTCK/GPIO6
MTDO/GPIO7
VDD_SPI/GPIO11
SPIHD/GPIO12
SPIWP/GPIO13
SPICS0/GPIO14
SPICLK/GPIO15
SPID/GPIO16
SPIQ/GPIO17
VDD3P3
VDDA
VDD3P3_RTC
VDD3P3_CPU
U0TXD/GPIO21
U0RXD/GPIO20
GPIO19/USB_D+
GPIO18/USB_D-
USB_INT_DP
USB_INT_DN
GPIO2/ADC1_CH2
GPIO3/ADC1_CH3
GPIO8
GPIO9/BOOT
GPIO10
ESP32-C3
GND
VWIFI
R8
20k
LED_INTERNAL
NOTE: GPIO2 is the default pin for WLED
VWIFI
R6
20k
GPIO8 high for download boot
BOOT_MODE
SPI_IO3
SPI_IO2
SPI_CS
SPI_CLK
SPI_IO0
SPI_IO1
USB Debug
J1
VBUS
A4B9
VUSB
CC1
CC2
A5
B5
R1
5.1k
R4
5.1k
D-
D-
D+
D+
A7
B7
A6
B6
USB_INT_DN
USB_INT_DP
SBU1
SBU2
A8
B8
GND
Shell
A1B12
10 Ohm R18
USB-C Receptacle
SPI Flash
VSPI
C14
100nF
VCC
CS
CLK
DI(IO0)
DO(IO1)
IO2
IO3
GND
SPI_CS
SPI_CLK
SPI_IO0
SPI_IO1
SPI_IO2
SPI_IO3
U3
W25Q128JVS
VWIFI
100nF
C15
5V -> 3.3V
V5V
100nF
C16
VWIFI
U4
VCCB
VCCB
OE#
B1
B2
B3
B4
B5
B6
B7
B8
GND
VCCA
DIR
A1
A2
A3
A4
A5
A6
A7
A8
GND
GND
0 Ohm
R12
0 Ohm
R10
LED_INTERNAL
LED_EXTERNAL
0 Ohm
R14
0 Ohm
R13
LED_INTERNAL_5V
LED_EXTERNAL_5V
SN74LVC4245APWR
Onboard LEDs
V5V
C22
100nF
C23
100nF
C24
100nF
C25
100nF
C26
100nF
C27
100nF
C28
100nF
C29
100nF
LED_INTERNAL_5V
D3
D2
D4
D5
D6
D7
D8
D9
DIN
DOUT
VDD
VSS
WS2812C-2020
J4
JST-PH
MP
Bare Wire
CONN2
External LEDs
V5V
J3
LED_EXTERNAL_5V
JST-PH
MP
2060-453/998-404
V5V
LED_EXTERNAL_5V
CONN1
Test Points and Mounting Holes
Mounting Hole
Mounting Hole
Mounting Hole
V5V
TP2
5V
TP1
GND
Sheet: /
File: Galvani.kicad_sch
Title:
Size: A4
Date:
Rev:
KiCad E.D.A. 8.0.5
Id: 1/1