Quotation - Material

ORWINS
22-S-14, Ashok Udhyaan,
Main Pal Road,
Jodhpur
Rajasthan
India
342006
Tel.: 9414570542 / Dealer Code: 145718
Email: orwins@fenestadealers.com

To	Deliver to
SAMDAR SINGH JAISHALMER, JAISALMER JAISALMER RAJASTHAN INDIA 345001 Tel. 9413189061 Email SAMDARSINGH01@GMAIL.COM	JAISHALMER, JAISALMER JAISALMER RAJASTHAN INDIA 345001

Quote No.	Quote Date	Print Date	Modified On	Valid upto	Responsible	Comment (R)
M/Q0978633	6/24/2024	6/24/2024		7/23/2024	HARSH	

Dear Sir/Mam,

We are delighted that you are considering Fenesta windows and doors for your premises. Fenesta has gained rapid acceptance across all cities of India for the overwhelming advantage of better protection from noise, heat, rain, dust and pollution.

In drawing this proposal, it has been our endeavour to suggest designs which would enhance your comfort and aesthetics from inside and improve the facade of the building.

Fenesta has a well-established service network to deliver seamless service at your doorstep. Our offer comprises of the following in enclosure for your kind perusal:

a) Window / Door are designed for 672 Pa.
b) Window design, specification and value
c) Terms and conditions of Contract
d) Floor Plan and Route map to site

We now look forward to be of service to you.

For ORWINS,

Mr.Harshwardhan Lakhani
✆ +91-9414570542

Quote No.	Quote Date	Print Date	Modified On	Valid upto	Responsible	Comment (R)
M/Q0978633	6/24/2024	6/24/2024		7/23/2024	HARSH	

Sales Line | **Details**

0001 — Size (m) 7.800w x 1.650h

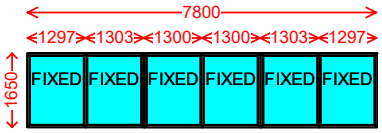

Viewed from Inside

Area 12.870 Sqm — Wt. 292.244 Kg

Window Code: W 1 — Location: W 1

System: Coupling System (uPVC)
Design: Bay 3 Facet

Colour: Pristine White
Coupling 180: A65PO4+Rein1
Glazing: SG CL_TGH 8MM

Qty	Rate	Discounted Rate	Amount
2	₹101545.40	₹101545.40	₹203090.80

Frame 1 — ULCW[illegible]200PQQOO — Size (m) 2.594w x 1.650h

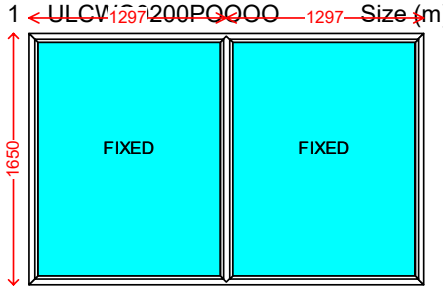

Viewed from Inside

Area 4.280 Sqm — Wt. 96.630 Kg

Window Code: W 1 — Location: W 1

System: Coupling System (uPVC)
Design: Fix.Fix

Colour: Pristine White
Glazing: SG CL_TGH 8MM

Frame 2 — ULCW[illegible]200PQQOO — Size (m) 2.588w x 1.650h

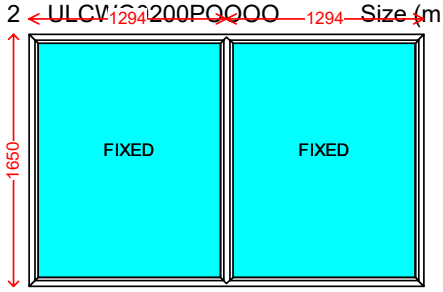

Viewed from Inside

Area 4.270 Sqm — Wt. 96.358 Kg

Window Code: W 1 — Location: W 1

System: Coupling System (uPVC)
Design: Fix.Fix

Colour: Pristine White
Glazing: SG CL_TGH 8MM

Frame 3 — ULCW[illegible]200PQQOO — Size (m) 2.594w x 1.650h

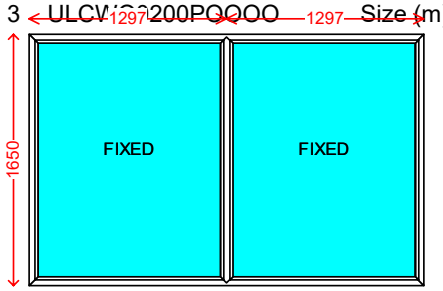

Viewed from Inside

Area 4.280 Sqm — Wt. 96.630 Kg

Window Code: W 1 — Location: W 1

System: Coupling System (uPVC)
Design: Fix.Fix

Colour: Pristine White
Glazing: SG CL_TGH 8MM

Quote No.	Quote Date	Print Date	Modified On	Valid upto	Responsible	Comment (R)
M/Q0978633	6/24/2024	6/24/2024		7/23/2024	HARSH	

Sales Line | **Details**

0002 — Size (m) 7.800w x 1.650h

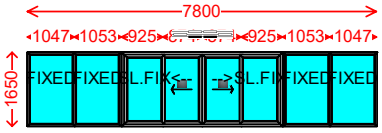

Viewed from Inside

Area 12.867 Sqm — Wt. 292.360 Kg

Window Code: W 2 — Location: W 2

System:	Coupling System (uPVC)
Design:	Bay 3 Facet
Colour	Pristine White
Slider OF	Yes Bugscreen No Monsoon Guard
Slider Sash	S65 PS2
Slider Threshold	with Threshold/118mm
Handle Colour	White
Hnd Outer Track	D Non Lck One Side Lvr One Side Plate
Mech Joint	No
Hurricane Bar	No
Bug Mesh	Fibre Mesh
BS Position	Inside
BS Handle	C type Handle
Coupling 180	A65PO4+Rein1
Glazing	SG TGH 6MM

Qty	Rate	Discounted Rate	Amount
4	₹138344.93	₹138344.93	₹553379.72

Frame 1 — Size (m) 2.094w x 1.650h

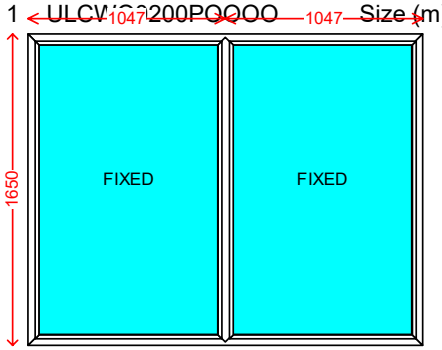

Viewed from Inside

Area 3.455 Sqm — Wt. 63.892 Kg

Window Code: W 2 — Location: W 2

System:	Coupling System (uPVC)
Design:	Fix.Fix
Colour	Pristine White
Glazing	SG TGH 6MM

Frame 2 — Size (m) 3.586w x 1.650h

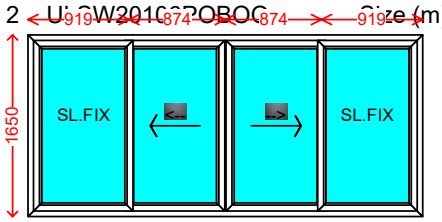

Viewed from Inside

Scan to Watch Video

Area 5.917 Sqm — Wt. 161.902 Kg

Window Code: W 2 — Location: W 2

System:	Coupling System (uPVC)
Design:	Horizontal Slider OiXmXiO
Colour	Pristine White
Slider OF	Yes Bugscreen No Monsoon Guard
Slider Sash	S65 PS2
Slider Threshold	with Threshold/118mm
Handle Colour	White
Hnd Outer Track	D Non Lck One Side Lvr One Side Plate
Mech Joint	No
Hurricane Bar	No
Bug Mesh	Fibre Mesh
BS Position	Inside
BS Handle	C type Handle
Glazing	SG TGH 6MM

Quote No.	Quote Date	Print Date	Modified On	Valid upto	Responsible	Comment (R)
M/Q0978633	6/24/2024	6/24/2024		7/23/2024	HARSH	

Sales Line | **Details**

Frame 3 ULCW0200POOOO Size (m) 2.094w x 1.650h

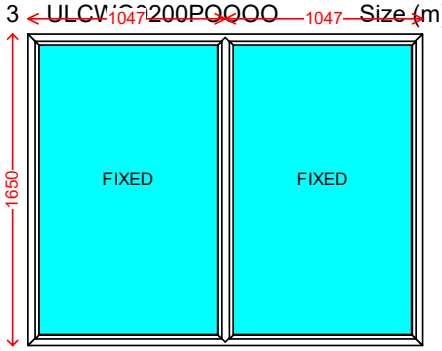

Viewed from Inside

Area 3.455 Sqm Wt. 63.892 Kg

Window Code: W 2 Location: W 2

System:	Coupling System (uPVC)
Design:	Fix.Fix
Colour	Pristine White
Glazing	SG TGH 6MM

0003 ULCWO0400POOOO Size (m) 3.000w x 1.650h

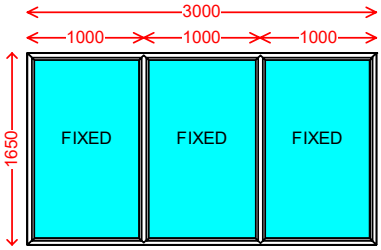

Viewed from Inside

Area 4.950 Sqm Wt. 92.113 Kg

Window Code: W 3 Location: W 3

System:	Luxury Casement Window (uPVC)
Design:	Fix.Fix.Fix
Colour	Pristine White
Glazing	SG TGH 6MM

Qty	Rate	Discounted Rate	Amount
4	₹33956.56	₹33956.56	₹135826.24

0004 ULCDO0108POOOO Size (m) 1.800w x 2.400h

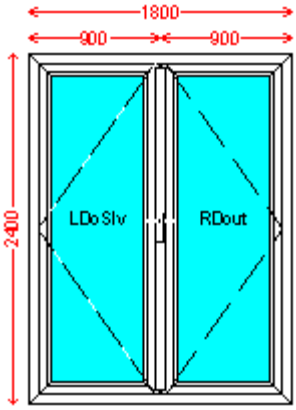

Viewed from Inside

Area 4.320 Sqm Wt. 105.353 Kg

Window Code: W 4 Location: W 4

System:	Luxury Casement Door (uPVC)
Design:	LDoSlv.RDout
Colour	Pristine White
Threshold	with Threshold/65mm
Handle Colour	White
Locking System	Hook Lock+Std Cylinder
Cylinder	One Side Thumb Turn One Side Blank
Door Restrictor	Yes
Glazing	SG TGH 6MM

Remarks

Product has crossed standard size limit. On survey
Sash A1:Height can be increased only upto (+) 20mm
Sash B1:Height can be increased only upto (+) 20mm

Qty	Rate	Discounted Rate	Amount
2	₹95471.19	₹95471.19	₹190942.38

Total
Weight 2,333.086 Kg Quantity 12

Payment Terms
100% Advance

Material Price		**₹1083239.14**
Discount		**₹0.00**
Material Subtotal		**₹1083239.14**
Transport Cost		**₹29200.00**
Lead and Lift		**₹6200.00**
GST*	**18.000%**	**₹201355.05**
Grand Total		**₹1319994.19**

* Any change in taxes will be borne by customer.

Delivery Site :
JAISHALMER, JAISALMER
JAISALMER
RAJASTHAN
INDIA
345001

Signed by Client

Date

Samdar Singh
Email: samdarsingh01@gmail.com
Contact No:- 9413189061
* Fenesta will send Warranty Certificate to your Registered Email ID and Registered Whats app Mobile number, after Final Handover of Windows.

OUR VALUABLE CLIENTS

DLF BUILDING INDIA | Godrej | Larsen & Toubro | Tata Projects | Mahindra Lifespaces | Prestige Group

Fenesta Range

uPVC Windows & Doors

Aluminium Windows & Doors

Internal & Designer Doors

Explore Our Other Products

Sliding Retrofit Bug Screen

Pleated Bug Screen

Pull Down Bug Screen

Georgian Bar

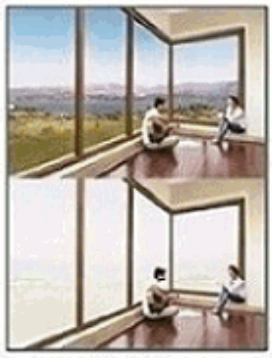

Switch Glass

Trims

TERMS AND CONDITIONS OF CONTRACT - WINDOWS & DOORS (PRODUCTS)

1. CONTRACT

(a) Only these terms and conditions and the product details shown on the Quotation enclosed form the Contract between us, so it is important that you check to make sure everything you want is included. We have asked you to read these terms and conditions and sign on the each page to confirm that you agree to them. Any warranties or promises, representation given or discussion held verbally by any person on behalf of us that are not noted and detailed herein will not form any part of this contract and we will not be responsible for the same.

(b) You have understood all the terms and conditions, features, designs, drawings, notes, abbreviations, specifications and applications of the products before signing the attached order, drawings including price proposal in acceptance of the same.

(c) Since product development is an ongoing process, hence, product design and specification may vary slightly without altering the functioning in any way.

(d) You have fully understood that this contract may be subject to a survey and approved deviation if any and credit check to be carried out by Fenesta.

(e) The Price shall be valid for six months from the date of the Contract.

(f) Glasses are standard bought out item from glass processors/manufacturers. The Glasses as purchased by us from glass vendors, are working according to the tolerance specified by the glass industries as per BIS {IS 2553 Part 1 : 2018}. Processed glass by its nature might have distortion within the range as specified in BIS. In such cases, Fenesta is not liable to replace the glass.

2. CHANGES TO THE CONTRACT

If either of us wants to make any changes after this contract has been signed, both the parties will need to agree to them in writing. Sometimes we may need to make minor technical changes to the product specifications which are unavoidable and we will not notify you in such cases.

3. CANCELLATION OF CONTRACT

(a) You shall not cancel this contract subject to as hereunder, so sign it if you are sure you wish to purchase the products shown and you can comply with the terms and conditions.

(b) If we cancel the contract, we will notify and refund your deposit. We may cancel the contract if (i) we cannot reach an agreement with you over our suggested changes or any pricing changes after we have carried out the survey (ii) there is a breach of contract or refusal to comply with statutory requirements such as Building Regulations etc.

(c) It shall be clearly understood that the product under this order/contract is customised for you and cancellation charges will be applicable as follows;

1. If you cancel the contract before survey and cancelled order value is 50% or more of the order value than the minimum applicable cancellation charges is 10% of the cancelled order value or Rs 25,000/- plus applicable taxes, whichever is lower.
2. If you cancel the contract before survey and cancelled order value is less than 50% of the order value then the minimum applicable cancellation charges is 10% of the cancelled order value or Rs 10,000/- plus applicable taxes, whichever is lower.
3. If you cancel the order after survey but before production then cancellation charges will be 150% of above cancellation charges plus actual cost incurred on your order by Company.
4. Once product has been produced, in such case cancellation of order/contract is not permitted and sale consideration amount shall be recoverable.

Besides above, damages/charges as incurred by us will be borne by you for which we shall be sole judge. We have right to adjust Advance paid by you against these charges.

4. SURVEY

(a) We may carry out a survey to make sure that what you have requested can properly be installed at your site/premises. If problems arise at survey, we will let you know.

(b) You agree that all drawings, specification, notes, abbreviations (i,e make -ups, add-ons & trims) and proportions (i.e vent heights, casement widths etc., sill depth, height, widths) have been explained to you by the surveyor and all information agreed in writing to on this survey is contractually binding upon you under the terms and conditions of this contract.

(c) It be expressly understood that final production of the product will commence only after survey is done.

(d) You agree that all information discussed between yourself and the representative has been passed to the surveyor, as well as any relevant information regarding the appearance has been added to the contract in your presence.

(e) Internal Doors come in standard sizes. The Aperture Sizes mentioned on the enclosed quotation have to be maintained by you at site. We may allow tolerant limit of aperture size upto +-15MM in width and +-10MM in Height. In case the aperture sizes go beyond tolerant limit then civil work for aperture correction will be carried out by you at your cost.

(f) If we cannot reach consensus on aperture correction, Fenesta reserve the right to cancel your order.

5. DELIVERY SCHEDULE

(a) If any delivery dates communicated to you, these can only be estimates. Actual dates may vary. We will let you know when the products are ready. We will do our best to keep to this date but if delay arises due to reasons beyond our control, we will let you know and offer you the next earliest convenient date. Time is not the essence of the contract. In the event of a special glass being requested, We can only work to delivery times supplied by the glass manufacturer. Some special glasses may add 6-8 weeks on to standard delivery times.

(b) All products under contract are not meant for storage. You agree to pay all before dispatch payments, permit delivery immediately on intimation of production failing which storage charges @Rs. 50/window per day will be charged by us(after 7 days of Manufacturing of windows).

If finished goods of order are lying at factory for more than 60 days of intimation of production to you, then following action will be taken by us:

- Forfeiture of the advance money
- Recovery of all costs and incidental expenses (Net of Scrap value of windows)

(c) You agree that we will not be liable for any delay which arises from Force Majure reasons and causes beyond our control for example, fire, flood, riot, earthquake, civil disturbance, strikes, criminal damage, acts of war, government restrictions, shortage of labour and non-availability of material etc.

Force Majeure shall mean and include: To the extent that the event is not within our control. The term Force Majeure, shall include the following events; "War, hostilities, acts of public enemy or belligerents, sabotage, blockade, lockdown, curfew, epidemics, pandemic, revolution, insurrection, riot or disorder, expropriation, requisition, confiscation, interference by/or restrictions or onerous regulations imposed by civil or military or any other authority, whether legal or defacto, whether purporting to act under some constitution, decree, law or otherwise; acts of God, fire, earthquake, storm, lightning, epidemic; quarantine; strikes or combination of workmen lockouts or other labor disturbances; explosions, accidents by fire or otherwise, Govt orders/regulations or other events whether or not of the same class or kind as those set forth."

(d) It will take up to 7 working days to dispatch windows from Factory after clearance of Pre-dispatch payment.

6. DELIVERY

(a) The freight charges have been considered as per the size of the order. If you desire deliveries in multiple lots after placing the order, additional freight charges shall be applicable. If smaller lots are desired by you for priority shipment, full truck load charge along with additional packing charges will be applicable.

(b) Since deliveries are made to the site in trucks and there are restrictions of truck movement in the city, the deliveries can be made only in permissible hours.

(c) Once products are delivered, you will be responsible for safety and security of material. In case of any damage or loss, replacement shall be charged to the customer. We will not be responsible for any inherent delays in arranging such replacement parts.

(d) Any statutory paperwork required will be provided by the client. If there is a requirement to obtain permissions from the RWA or society, the client undertakes to obtain the same in time.

7. PAYMENT

(a) In all cases, 100% payment has to be made along with order/survey and before goods are delivered at your site as per payment terms. Where there is a delay in payment being received according to the payment schedule as advised / communicated by us, the time schedule will not be binding on us and any quoted delivery times will also be extended to reflect the period of the delay.

You will adhere to the payment schedule in all respect. The payment made shall not fall under the prohibition Banami Transaction Act, 1988 as amended up to date. If found you shall be liable for consequences of the same.

(b) All Taxes & Duties including GST will be charged at actual as applicable at the time of billing. Any change in taxes will be borne by the customer.

(c) Payment Details (For NEFT/RTGS):

- We prefers to receive payments through Netbanking transfers.
  Account Name: Orwins
  A/C No. : 39024279362
  Name of Bank: STATE BANK OF INDIA
  RTGS/NEFT/IFSC Code: SBIN0031997

8. WARRANTIES

1. This Product's Warranty, provided by Fenesta, covers a period of Twenty Years for UPVC Profile and Ten Years for Aluminium Profile and five years for associate hardware in uPVC/Aluminium profile or profile part or hardware used in manufacturing of windows/doors. The standard UPVC/Aluminium profile used for manufacture of Fenesta Window Systems are warranted against defects in material, design or workmanship for a period of Twenty years for UPVC Profile and Ten Years for Aluminium Profile from the date of Dispatch.

2. This Product's Warranty, provided by Fenesta, also covers a period of Five Years for Solid Panel doors (Hybrid material doors and engineered wooden doors) and associated hardware from the month of dispatch.

3. This warranty only extends to original purchaser and this warranty certificate and the proof of purchase must be presented when required.

4. Repair or replacement of a product under warranty will be done at Fenesta's discretion and judgement once the defective product is returned to Fenesta. Upon return of the defective product to Fenesta within the warranty period it shall repair/replace the product as may be required free of charge at its sole discretion and judgment.

5. The warranty is only applicable if the complete products i.e. (Frame, sash, handle, hinges etc.) are installed by Fenesta/Authorized Service Station.

6. This warranty covers defects due to all faulty parts and/or functions, resulting despite user's normal use, will be repaired and/or replaced at no charge during the warranty period.

7. The Warranty shall not apply to following:

(a) In case of physical /damage/cut/Crack of the glass or mesh.

(b) If the copy of invoice is not produced at the time of warranty claim.

(c) Any product for which you have not paid the total sales price.

(d) Any defects in windows & doors, arising from wear and tear, willful or accidental damage, physical damage including but not limited to shaving of the edges, negligence, neglect misuse, breakages, scratches, structural or latent defects at your property or causes beyond our control. Malfunction or damage due to inappropriate operation or impact, improper use, abuse or negligence by the customer, or to any misuse of the product as described in manufacture manual/guidelines.

(e) Damage to the product caused by weather and environmental conditions including natural, disasters like fire, flood, earthquake, lightning etc and disturbances (war, riots and revolution) and any unforeseen reason or any other external factors beyond the control of manufacturer or seller.

(f) In case of product finishing is affected by Colour, gloss and lustre of the article.

(g) If the product is exposed with any chemical substance, oil, lubricants, acid fumes, liquid steam etc.

(h) Products if are refitted or tampered with installation in any manner or any product installed by unauthorized service person. Improper fixing the products by non-recommended tools and practices.

(i) Use of goods contrary to our recommendations.

(j) Products which cannot be accessed for routine service and damage to the operating mechanism caused by the presence of dirt and debris from inadequate maintenance.

(k) If Grills (Fix) are mounted on sill and windows/doors cannot be accessed for service.

(l) Civil work, painting, POP, flooring and other work of similar nature is carried out after installation of products leading to damage to product & hardware or affecting performance of product & hardware (rollers, handle, friction stay,etc.) in the long-term.

(m) Performance of the product varies according to the outer environment and uses.

(n) Warranty is null and void if the windows and doors are not installed and handed over within 30 days of dispatch.

(o) In Case of damage to the "Shades and surface finish" due to usage of aggressive cleaner and contrary to recommended use of cleaning details as mentioned in terms of the agreement.

(p) Engineered wooden doors exposed to direct sunlight, rain, damage due to soaking of door frame and shutter in the water, damage due to termite in the building premise and cases where after installation of Engineered wooden doors, there is suspension or hanging in the door shutter.

(q) In solid panel doors, for smart locks and handles of special colour finishes like gold/ red bronze/ bronze/matt black, warranty shall be for one year only.

8. In case of only panel selling of engineered wooden doors (i) Fenesta shall not install the doors (ii) Fenesta will not cover any operational issues (iii) Fenesta will not cover any issue with frames.

9. Neither the authorized Service centre nor the Fenesta that sold the product nor the manufacturer or any its affiliates shall be responsible for any delay in repairs in the event that the Fenesta does not have the parts in stock necessary for the warranty servicing of the product.

10. Except for the warranties set forth herein, Fenesta disclaims all other warranties, express or implied or statutory, including, but not limited to the implied warranties or merchantability/manufacturer or fitness for particular purpose. Any implied warranties that may be imposed by applicable law are limited to the duration of this limited warranty. In no event Fenesta shall be liable for any incidental, special or consequential damages, consequential human injury or loss, including, but not limited to loss of business, profits, or use whether in an action or tort or bases on warranty arising out of or in connection with the use or performance of the product. The Company Maximum liability hereunder is limited to the purchase price of the product.

11. In case of any new owner wish to make use of the warranty for the remaining period. To formalize the transfer of the warranty, Fenesta should be informed so that: (a) Records can be amended (b) An inspection of windows, Doors and hardware can be carried out to certify their condition. A Nominal Transfer fees of Rs.5,000/- will be charged. Since Warranty is applicable to end customer in case of builder property, Fenesta shall liable to provide warranty to first allottee of property without charge.

12. The warranty can be invoked only after making payment of the invoice in full within prescribed time.

13. Fenesta also reserve the right of changing any or all terms and condition under this warranty without prior notice and also on admissibility of claim under this warranty.

14. No terms and conditions other than those stated herein, and no agreement or understanding, oral or written, executed or expressed prior to this warranty in any way shall be binding to Fenesta.

15. For all complaint and queries, the user should only contact Fenesta Customer Service through the below mentioned channels only.

9. ARBITRATION AND JURISDICTION FOR DISPUTES

Any dispute, difference or claim that may arise under or in relation to or in connection with, the validity, interpretation, implementation or alleged breach of any provision of this Agreement, the same shall be referred to the sole Arbitrator to be appointed by Fenesta Building Systems(A Division of DCM Shriram Limited) whose decision shall be final and binding on the parties as per the provisions of Arbitration and conciliation Act, 1996 as amended by the Arbitration and Conciliation (Amendment) Act, 2015 and conducted in the English language and shall be held in New Delhi.

10. LAW AND JURISDICTION

That this contract and the rights and obligations of the parties under this contract shall be construed and enforced in accordance with the laws of India. The Court of New Delhi shall have jurisdiction in case any dispute arises between us in respect of this contract.

11. CHEQUE BOUNCING CHARGES

In case, cheque submitted by you bounced, We shall levy a cheque bouncing charge of INR 500/- per instrument and Fenesta reserve its rights to initiate case proceeding as advised under law.

12. ENTIRE AGREEMENT

This Agreement constitutes the entire agreement between us. No agreements, representations, or warranties other than those specifically set forth herein shall be binding on any of the parties unless set forth in writing and signed by both parties.

Payment Details

ChequeNo/RTGS	Date of Receiving	Cheque Date	Bank Name	Amount (Rs.)
5456			hdfc	20000

I hereby accept the estimate as per above mentioned price and specifications. I have read and understood the terms & conditions and agree to them

Signed by Representative/Business Associate

Signed by Client

Quotation - Services

ORWINS
22-S-14, Ashok Udhyaan,
Main Pal Road,
Jodhpur
Rajasthan
India
342006
Tel.: 9414570542 / Dealer Code: 145718
Email: orwins@fenestadealers.com

	Deliver to
SAMDAR SINGH JAISHALMER, JAISALMER JAISALMER RAJASTHAN INDIA 345001 Tel. 9413189061 Email SAMDARSINGH01@GMAIL.COM	JAISHALMER, JAISALMER JAISALMER RAJASTHAN INDIA 345001

Quote No.	Quote Date	Print Date	Last Modified	Valid upto	Responsible	Comment
S/Q0978633	6/24/2024	6/24/2024		7/23/2024	HARSH	

Dear Sir/Mam,

We are delighted that you are considering Fenesta windows and doors for your premises. Fenesta has gained rapid acceptance across all cities of India for the overwhelming advantage of better protection from noise, heat, rain, dust and pollution.

In drawing this proposal, it has been our endeavour to suggest designs which would enhance your comfort and aesthetics from inside and improve the facade of the building.

Fenesta has a well-established service network to deliver seamless service at your doorstep. Our offer comprises of the following in enclosure for your kind perusal:

a) Window design, specification and value
b) Terms and conditions of Contract
c) Floor Plan and Route map to site

We now look forward to be of service to you.

For ORWINS,

Mr.Harshwardhan Lakhani
✆+91-9414570542

Quote No.	Quote Date	Print Date	Last Modified	Valid upto	Responsible	Comment
S/Q0978633	6/24/2024	6/24/2024		7/23/2024	HARSH	

Sales Line	Details	Qty	Rate	Amount
0001 Coupling System (uPVC) Size (m) 7.800w x 1.650h Area 12.870 Sqm W 1 W 1	Bay 3 Facet Colour Pristine White Glazing SG CL_TGH 8MM	2.00	6214.78	12429.56
0002 Coupling System (uPVC) Size (m) 7.800w x 1.650h Area 12.867 Sqm W 2 W 2	Bay 3 Facet Colour Pristine White Glazing SG TGH 6MM	4.00	6213.19	24852.76
0003 Luxury Casement Window (uPVC) Size (m) 3.000w x 1.650h Area 4.950 Sqm W 3 W 3	Fix.Fix.Fix Colour Pristine White Glazing SG TGH 6MM	4.00	2397.68	9590.72
0004 Luxury Casement Door (uPVC) Size (m) 1.800w x 2.400h Area 4.320 Sqm W 4 W 4	LDoSlv.RDout Colour Pristine White Glazing SG TGH 6MM	2.00	2092.52	4185.04

Total
Weight 2,333.086 Kg Quantity 12

Installation Chg.		51058.08
GST*	18.000 %	9190.45
Grand Total		**₹60248.53**

* Taxes applicable at the time of billing.

Payment Terms
100% Advance

Delivery Site :
JAISHALMER, JAISALMER
JAISALMER
RAJASTHAN
INDIA
345001

Signed by Client Date

Samdar Singh
Email: samdarsingh01@gmail.com
Contact No:- 9413189061

TERMS AND CONDITIONS OF CONTRACT - WINDOWS & DOORS

1. CONTRACT

(a) We are engaged in the installation services of Window & Doors and internal Doors product. We are represented that it is having the requisite expertise and is fully acquainted with and has an experience in providing the Installation services of product and has offered to provide such services as referred above and upon representation, you have agreed to avail the installation services of the product and to undertake and carry out survey, installation, and handover of job and after sales service of the Fenesta products installed or to be installed at the site/location of the Customer.

(b) Only these terms and conditions shown on the Quotation enclosed form the Contract between us, so it is important that you check to make sure everything you want is included. We have asked you to read these terms and conditions and sign on the each page to confirm that you agree to them. Any warranties or promises, representation given or discussion held verbally by any person on behalf of us that are not noted and detailed herein will not form any part of this contract and we will not be responsible for the same.

(c) The Price shall be valid for six months from the date of the Contract.

2. CHANGES TO THE CONTRACT

If either of us wants to make any changes after this contract has been signed, both the parties will need to agree to them in writing first about the feasibility of the same.

3. CANCELLATION OF CONTRACT

We may cancel this agreement as per mutually agreed terms. It is clearly understood and agreed that once the order is finalized, cancellation of order/contract is not permitted. However, if you still cancel the contract, Fenesta Building Systems shall be entitled to claim cancellation fees as follows.

1. if you cancel the contract before survey and cancelled order value is more than 50% of the original order value then the minimum applicable cancellation charges is 10% of the cancelled order value.
2. if you cancel the contract before survey and cancelled order value is less than 50% of the original order value then the minimum applicable cancellation charges is 5% of the cancelled order value.

Besides above, damages charges will be borne by you for which we shall be sole judge. We have right to adjust Advance paid by you against these charges.

4. INSTALLATION SCHEDULE

(a) If any dates communicated to you, these can only be estimates. Actual dates may vary and time is not the essence of the contract.

(b) You will permit us (and our agents, employees and contractors) access to the installation site at all reasonable times so that we may complete the installation.

(c) Fenesta products are to be installed on immediate basis after product ready to be installed.

(d) You agree that we will not be liable for any delay which arises from Force Majeure reasons and causes beyond our control for example, fire, flood, riot, earthquake, civil disturbance, strikes, criminal damage, acts of war, government restrictions, shortage of labour and non-availability of material etc.

5. INSTALLATION AND HANDOVER

(a) You will be responsible for timely obtaining any planning consents, permissions, road permits, approval and/or to complete any work required before/for the installation at your cost. You will also be responsible for notifying us of any special conditions or restrictions which apply to your site/premises that restricts the installation of Fenesta products.

(b) We will remove and dispose of all the old windows and doors, if so agreed by us. This will be done on chargeable basis by us as per the rates agreed at the time of order booking.

(c) You must ensure that your belongings including and /or any cables, aerials, alarms, radiators, security grills, curtains and blinds etc. are removed and the area where our installers need to work is clear and workable.

(d) All Fenesta products are installed from inside of the building. If any scaffolding is required for installation, you will arrange for the same in advance at your cost.

(e) Fenesta products are finished products and should be installed after brickwork, plaster, POP and flooring etc. If the sills are of granite or marble, Fenesta products should be installed after curing of the sill. In some cases, sill can break during drilling if improperly fixed. Should this happen, Fenesta shall not be responsible for the same.

(f) We will use reasonable skill and care and approved working practices when installing the products. If any damage is caused due to installation directly attributable to us, Fenesta will repair the damage in possible manner; but Fenesta will not redecorate or re-tile or carry out any work not in scope of its work.

(g) Site work after installation can damage Fenesta products and you are advised to protect the product adequately. Any damage or breakage to Fenesta materials done by anyone including other vendors at site like painter, plumber, electricians, mason, etc. will be replaced at your cost only. We shall not be responsible for any inherent delays in arranging such replacement parts.

(h) We will not be liable for any damage to products after installation by third party workmen. Any remedial/rectification works required due to third party damage, will be charged for and payment will be received in advance for the same.

(i) We will not provide grills in Villa Windows. The same have to be arranged by you.

6. PAYMENT

(a) In all cases, 100% payment has to be made in advance. Where only a deposit has been paid, no installation will commence until the balance has been paid in full. Where there is a delay in payment being received, the time schedule will not be binding on us and any quoted installation times will also be extended to reflect the period of the delay. You will adhere to the payment schedule in all respect. The payment made shall not fall under the prohibition Banami Transaction Act, 1988 as amended up to date. If found you shall be liable for consequences of the same.

(b) All taxes and Duties including GST will be charged at actual as applicable at the time of billing. Any Change in Taxes & Duties will be borne by the customer.

7. ARBITRATION AND JURISDICTION FOR DISPUTES

Any dispute, difference or claim that may arise under or in relation to or in connection with, the validity, interpretation, implementation or alleged breach of any provision of this Agreement, the same shall be referred to the sole Arbitrator to be appointed by Fenesta Building Systems(A Division of DCM Shriram Limited) whose decision shall be final and binding on the parties as per the provisions of Arbitration and conciliation Act, 1996 as amended by the Arbitration and Conciliation (Amendment) Act, 2015 and conducted in the English language and shall be held in New Delhi.

8. LAW AND JURISDICTION

This contract and the rights and obligations of the parties under this contract shall be construed and enforced in accordance with the laws of India. The Court of New Delhi shall have jurisdiction in case any dispute arises between us in respect of this contract.

9. CHEQUE BOUNCING CHARGES

In case, cheque submitted by you bounced, We will levy a cheque bouncing charge of INR 500/- per instrument and we reserve its rights to initiate case proceeding as advised under law.

10. ENTIRE AGREEMENT

This Agreement constitutes the entire agreement between us. No agreements, representations, or warranties other than those specifically set forth herein shall be binding on any of the parties unless set forth in writing and signed by both parties.

Installation Payments

ChequeNo/RTGS	Date of Receiving	Cheque Date	Bank Name	Amount (Rs.)

I hereby accept the estimate as per above mentioned price and specifications. I have read and understood the terms & conditions and agree to them

Signed by Representative/Business Associate

Signed by Client