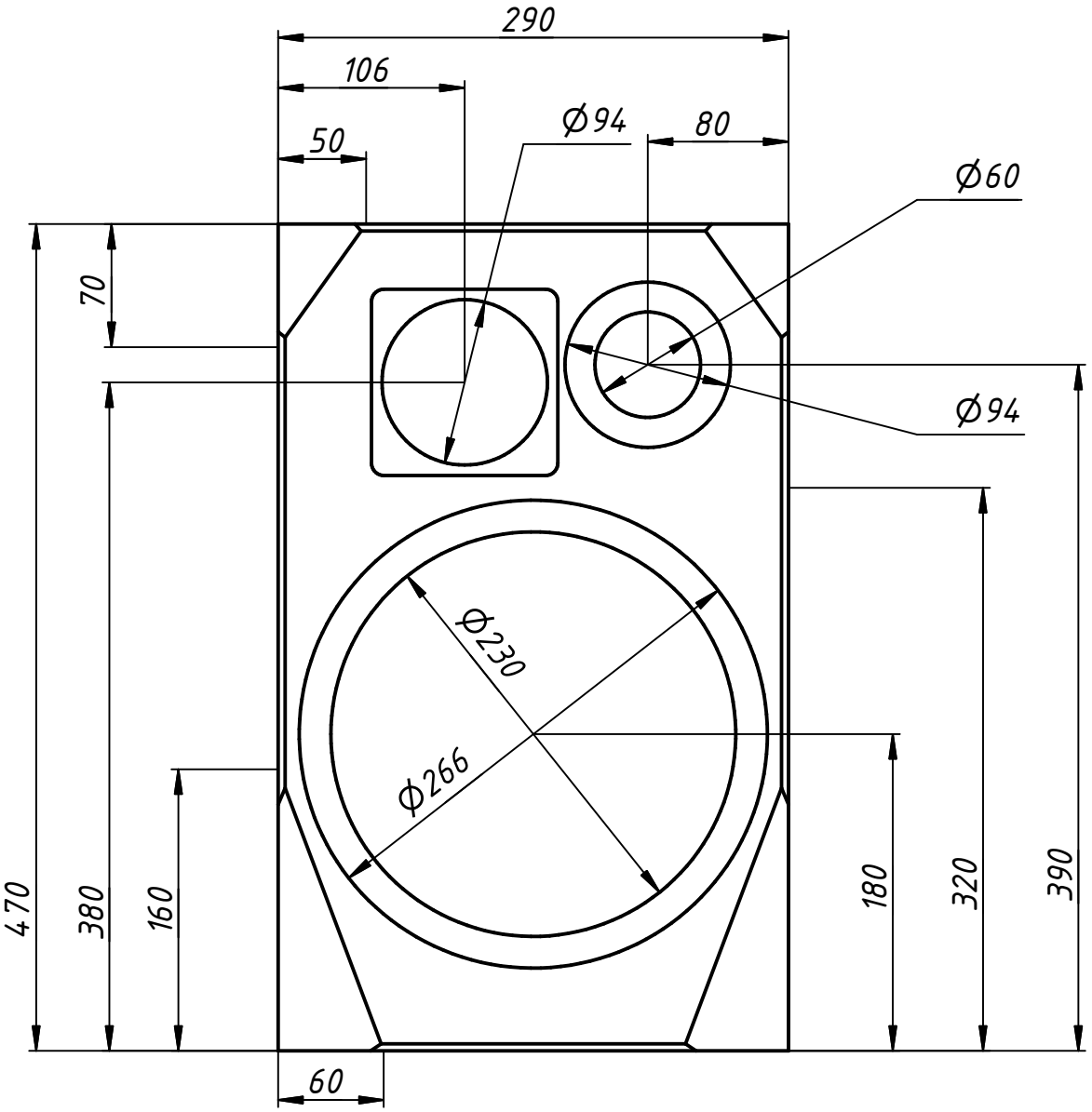

					fro