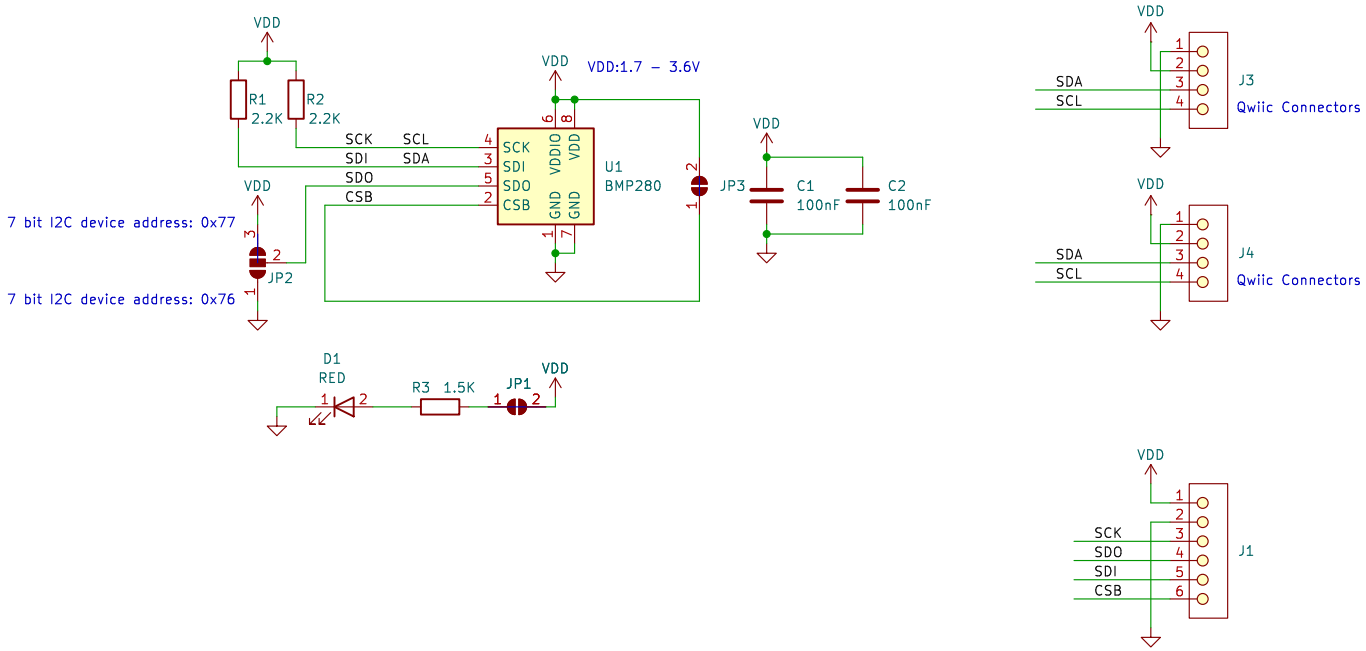

ALB–SEN0002
Designed by XPULabs.Com
AnalogLamb.Com

Sheet: /
File: alb_sen0002_bmp280_breakout.kicad_sch

Title: ALB BMP280 Barometer Sensor Breakout

Size: A4	Date: 2024–11–06	**Rev: 1V0**
KiCad E.D.A. 8.0.0		Id: 1/1