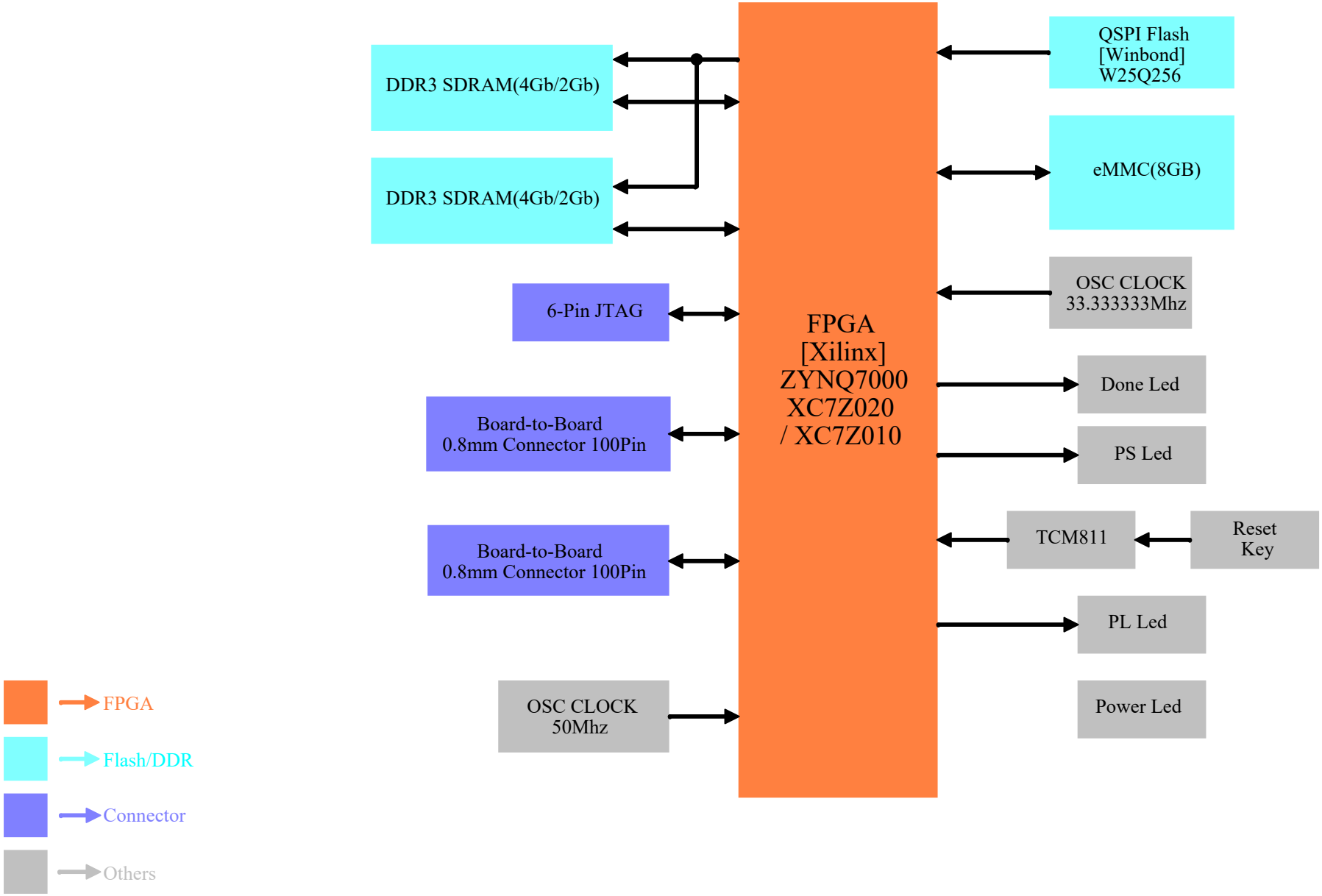

Design Name	ZYNQ-CORE	
Size A4	Page Name 01_Block Diagram	Rev 1.0
Date: Tuesday, April 23, 2024	Sheet 1 of 12	

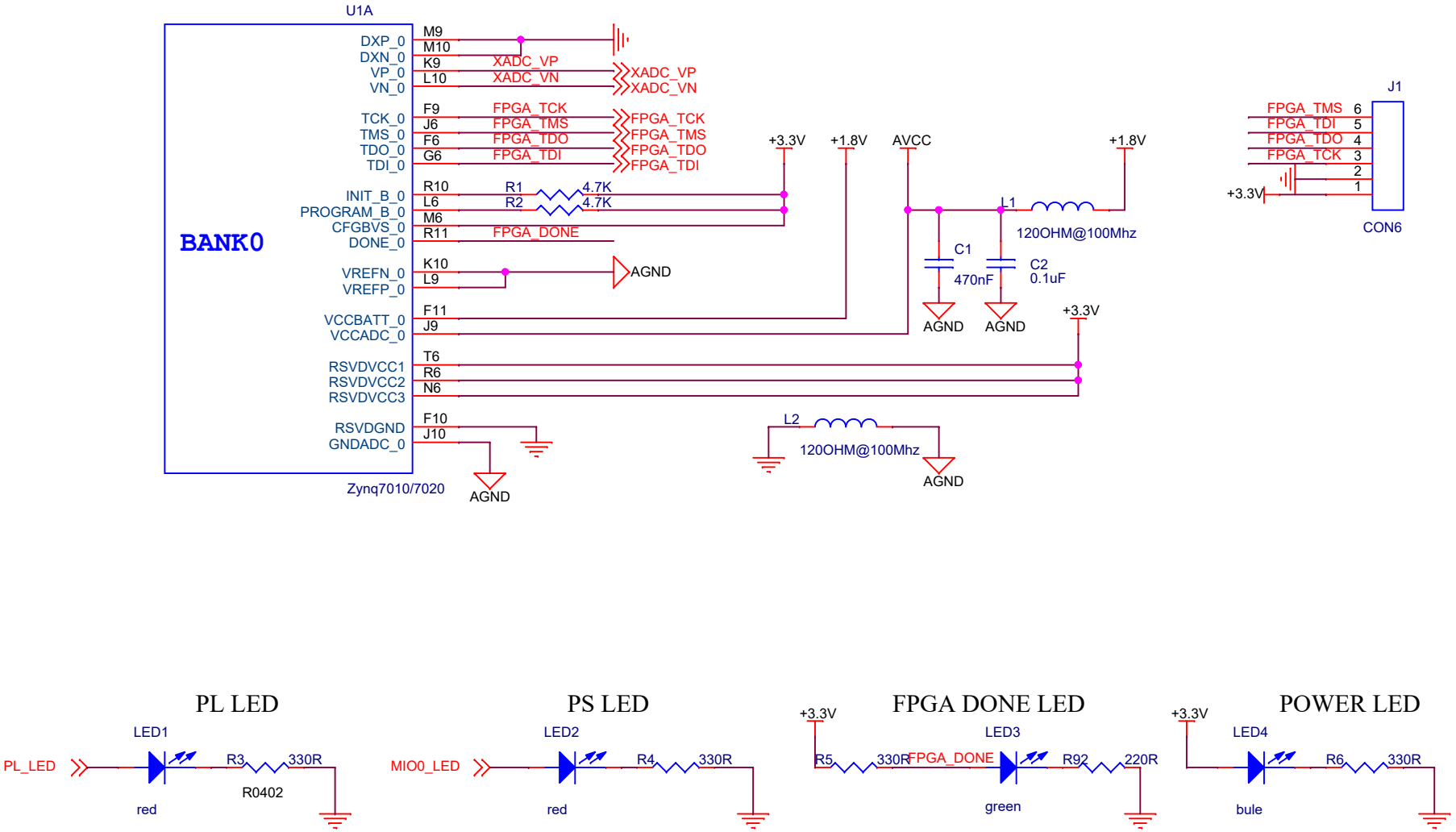

Design Name	ZYNQ-CORE	
Size A4	Page Name 02_FPGA Bank0	Rev 1.0
Date: Tuesday, April 23, 2024	Sheet 2 of 12	

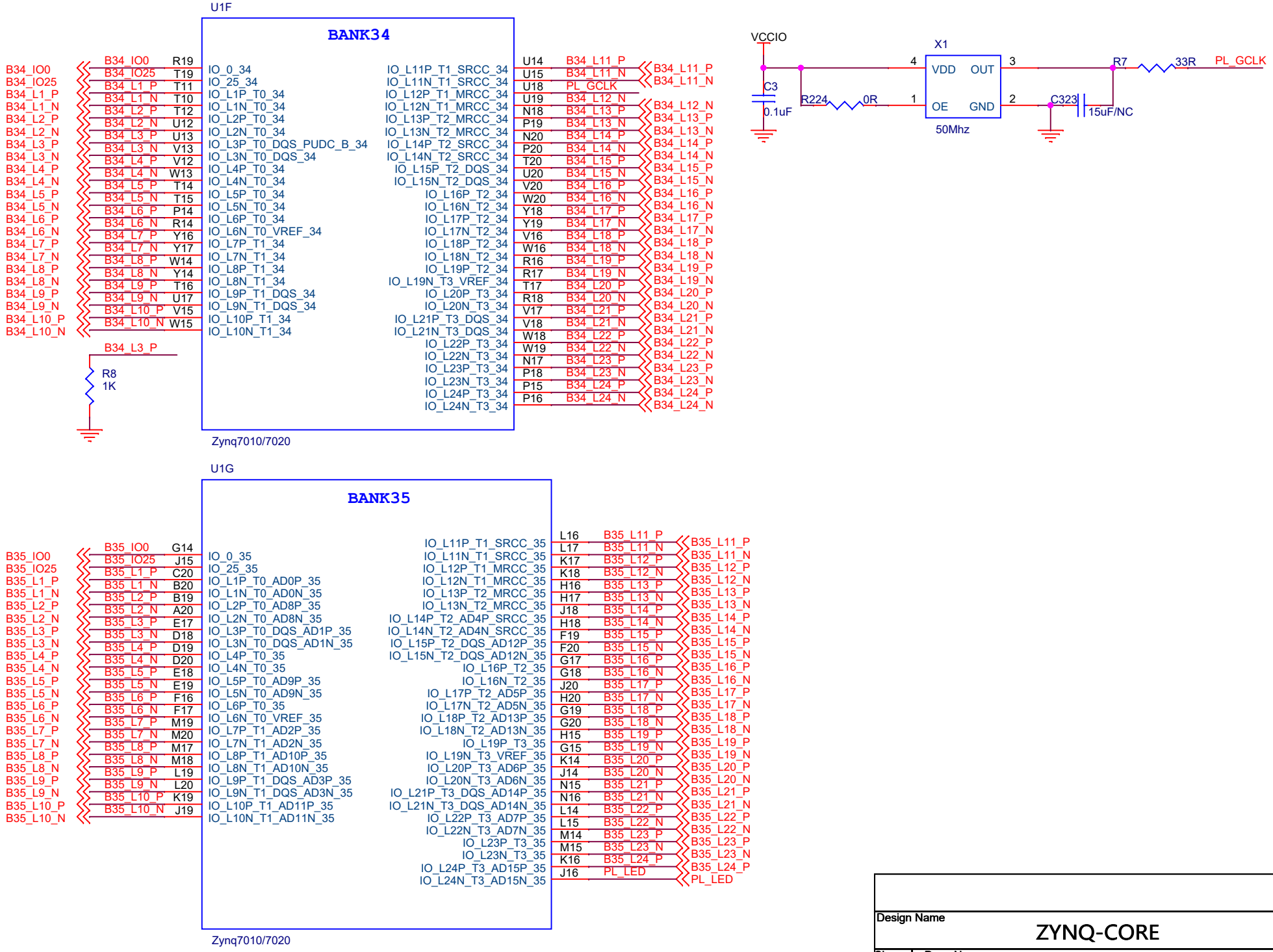

Design Name	ZYNQ-CORE	
Size A4	Page Name 03_FPGA Bank34,Bank35	Rev 1.0
Date: Thursday, May 16, 2024	Sheet 3 of 12	

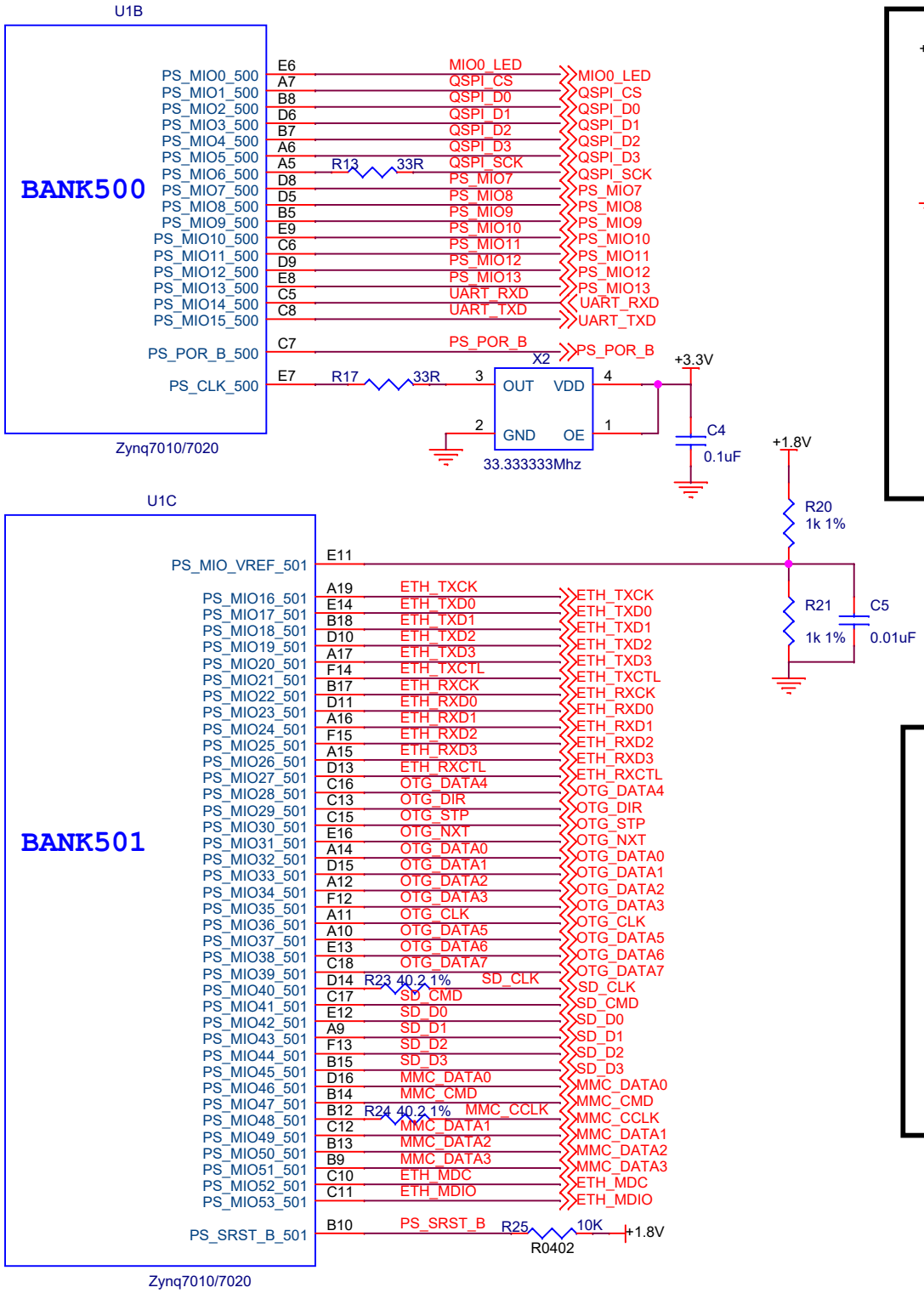

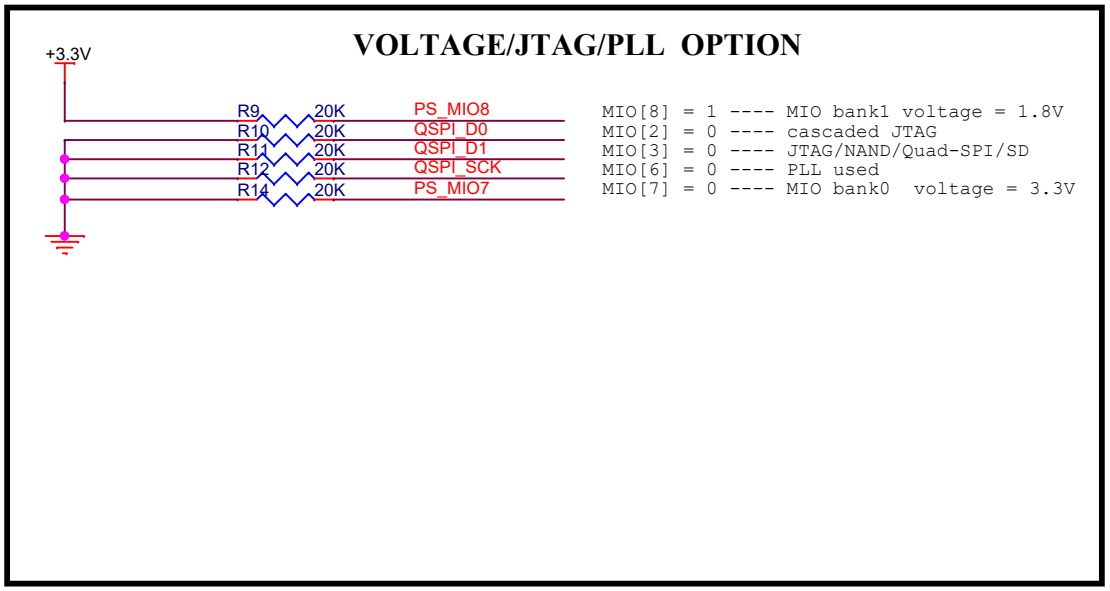

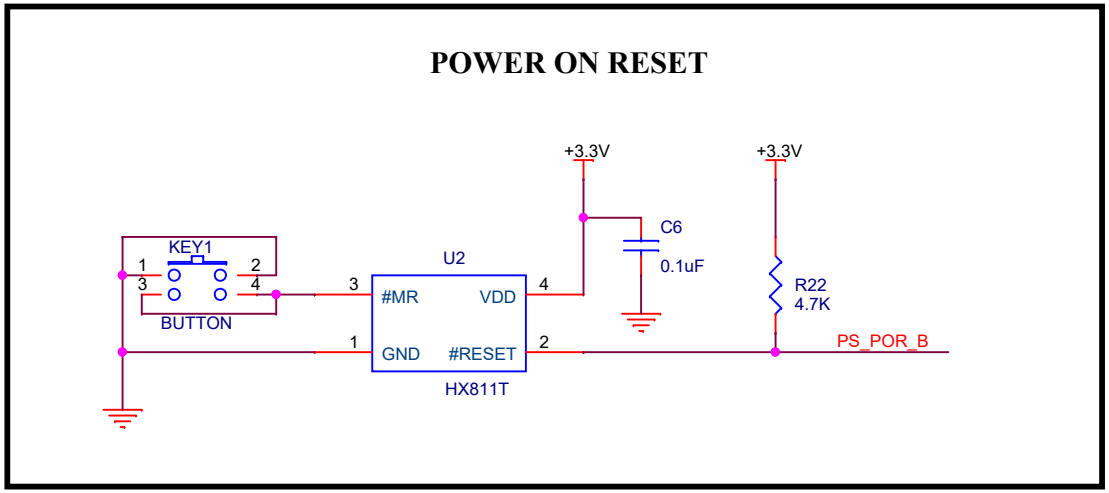

Design Name	ZYNQ-CORE		
Size A4	Page Name 04_FPGA Bank500,Bank501		Rev 1.0
Date: Tuesday, April 23, 2024	Sheet 4 of 12		

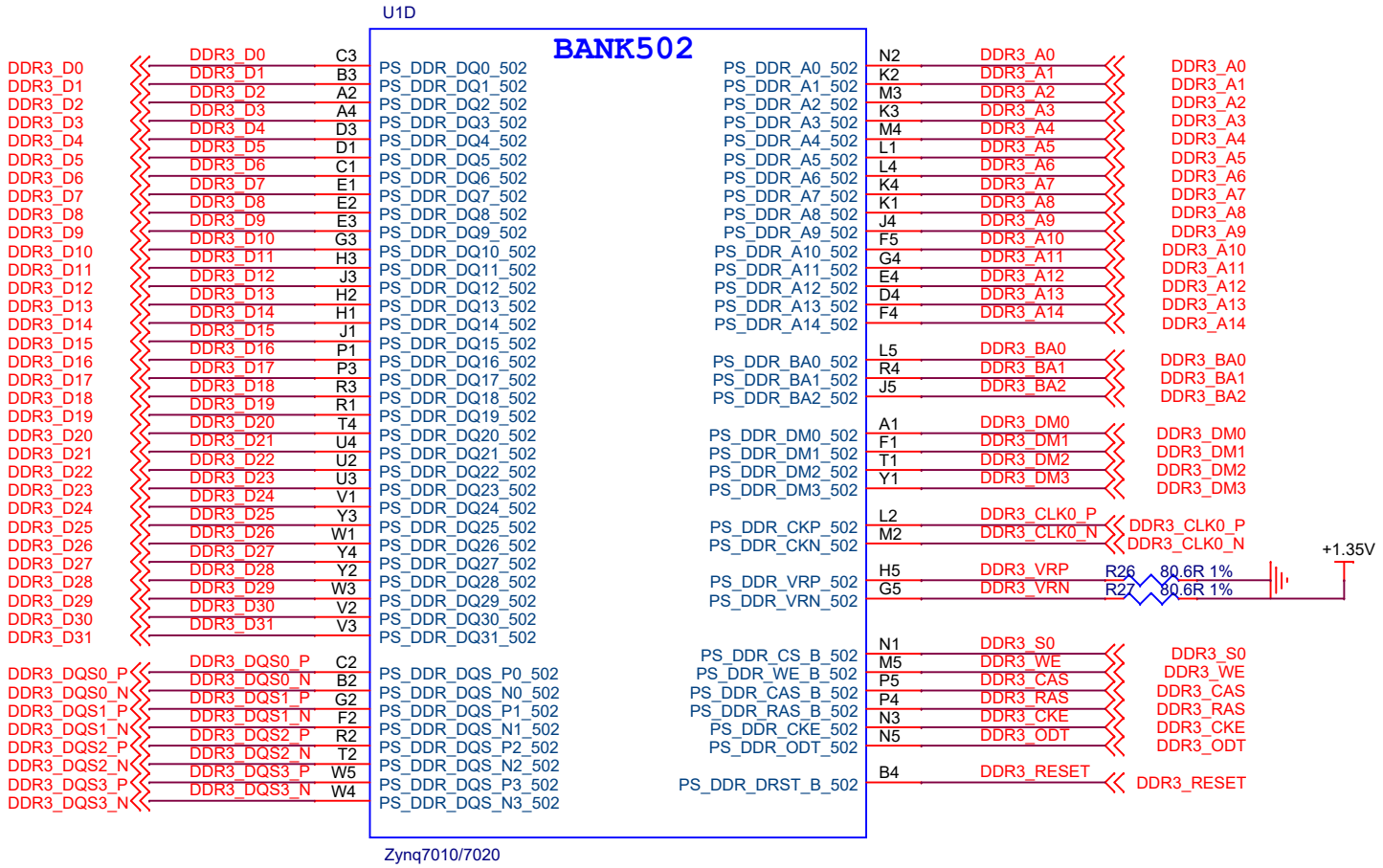

Design Name	ZYNQ-CORE		
Size A4	Page Name	05_FPGA Bank502	Rev 1.0
Date: Tuesday, April 23, 2024	Sheet 5 of 12		

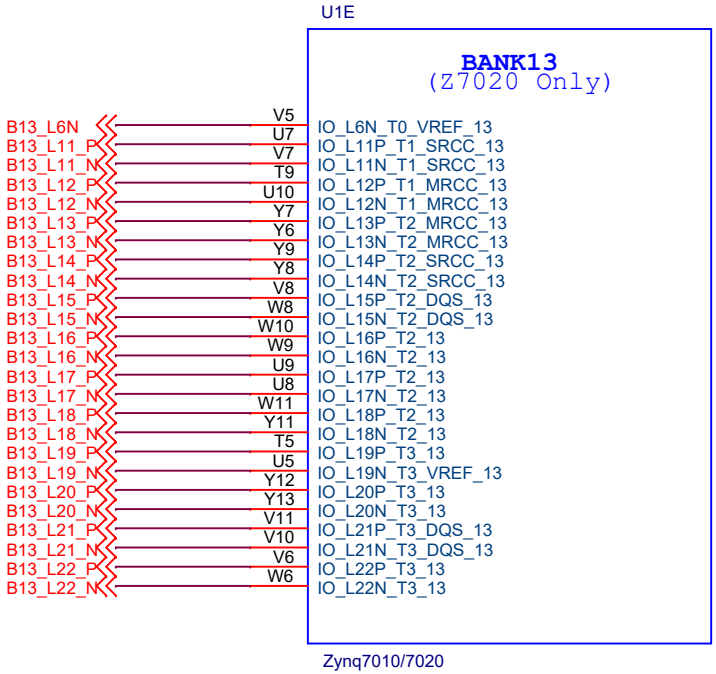

Design Name	ZYNQ-CORE	
Size A4	Page Name 06_Bank_13	Rev 1.0
Date: Tuesday, April 23, 2024	Sheet 6 of 12	

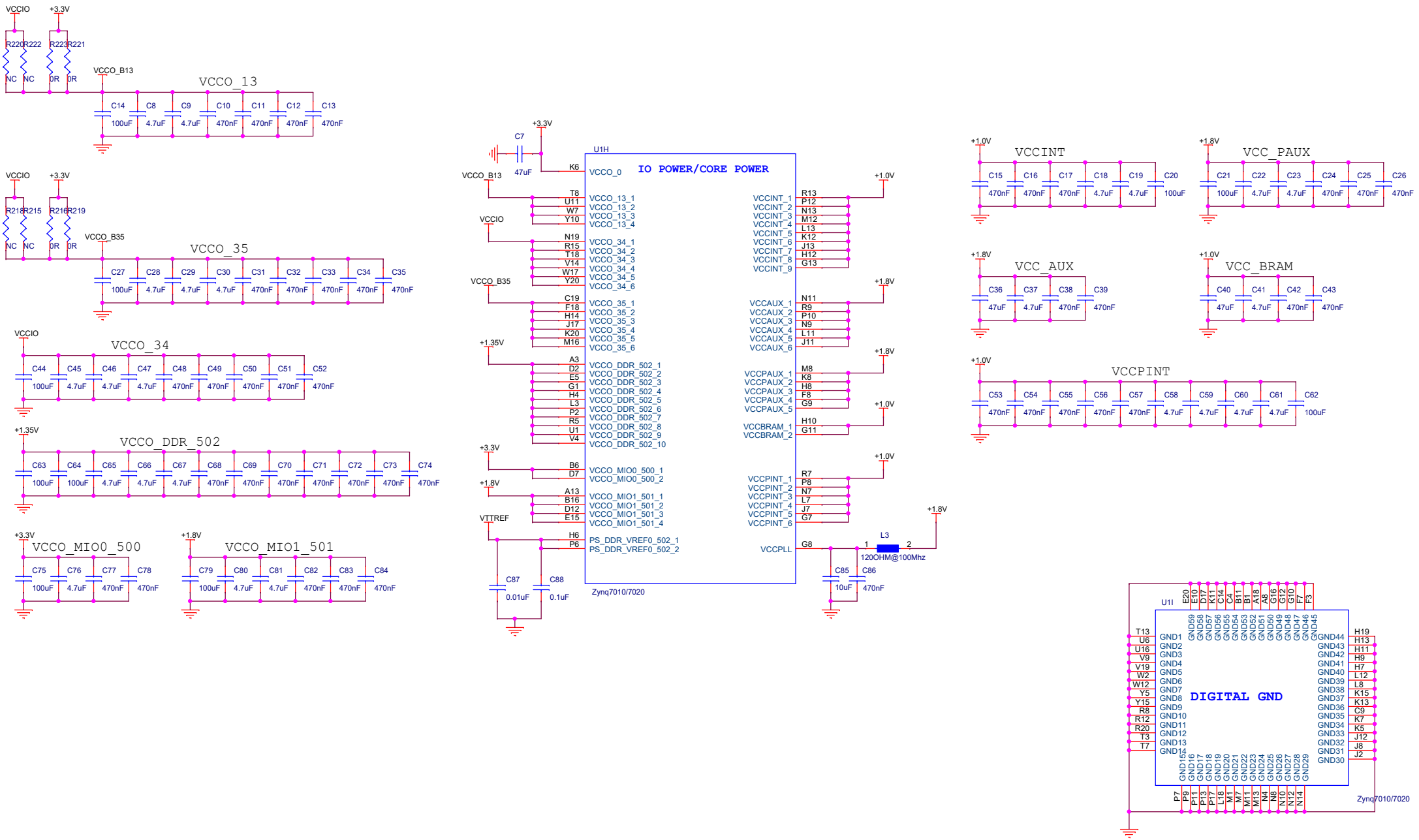

Design Name	ZYNQ-CORE	
Size A3	Page Name 07_FPGA_POWER	Rev 1.0
Date: Tuesday, April 23, 2024	Sheet 7 of 12	

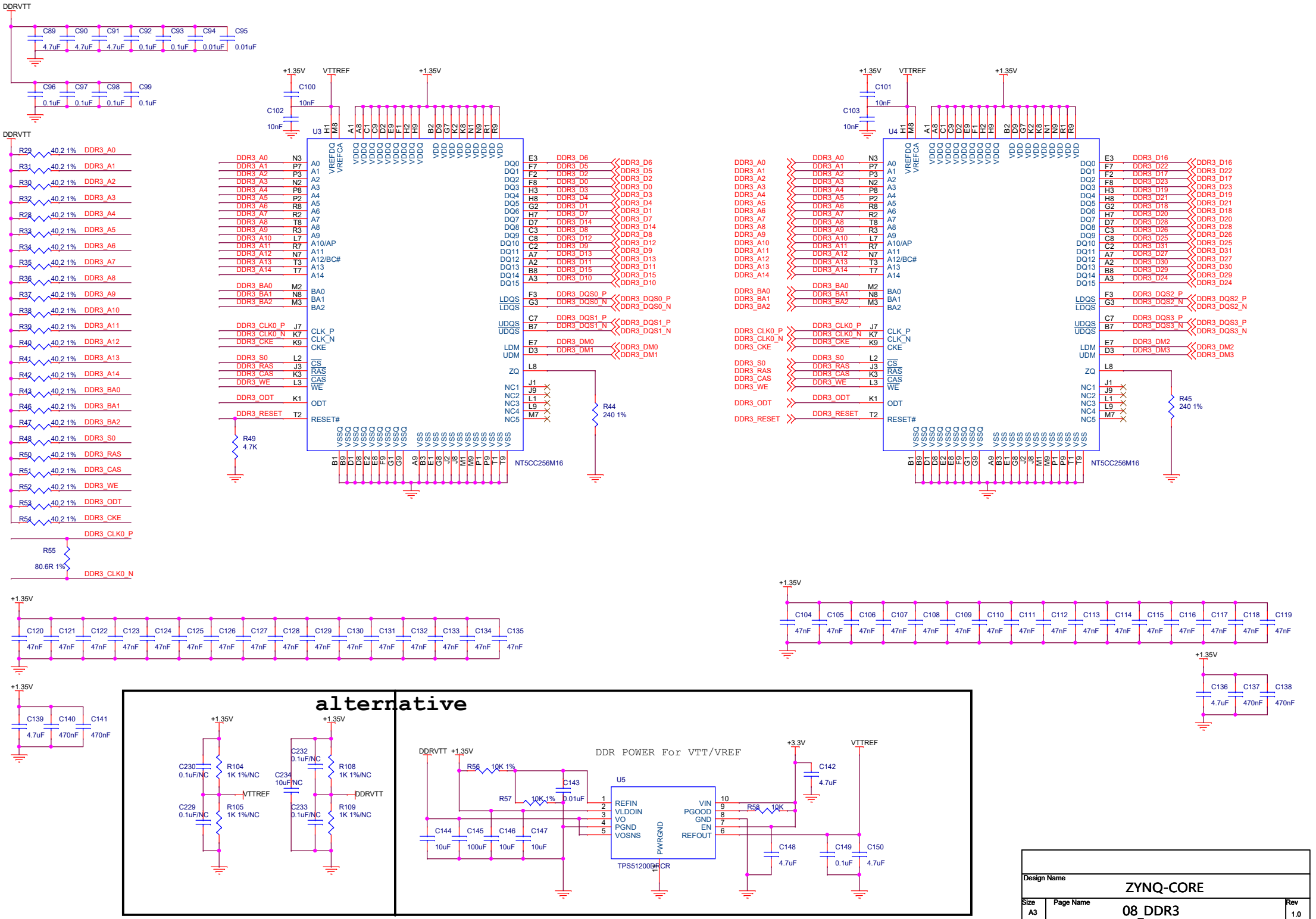

Design Name	ZYNQ-CORE
Size A3	Page Name 08_DDR3
Rev	1.0
Date: Tuesday, April 23, 2024	Sheet 8 of 12

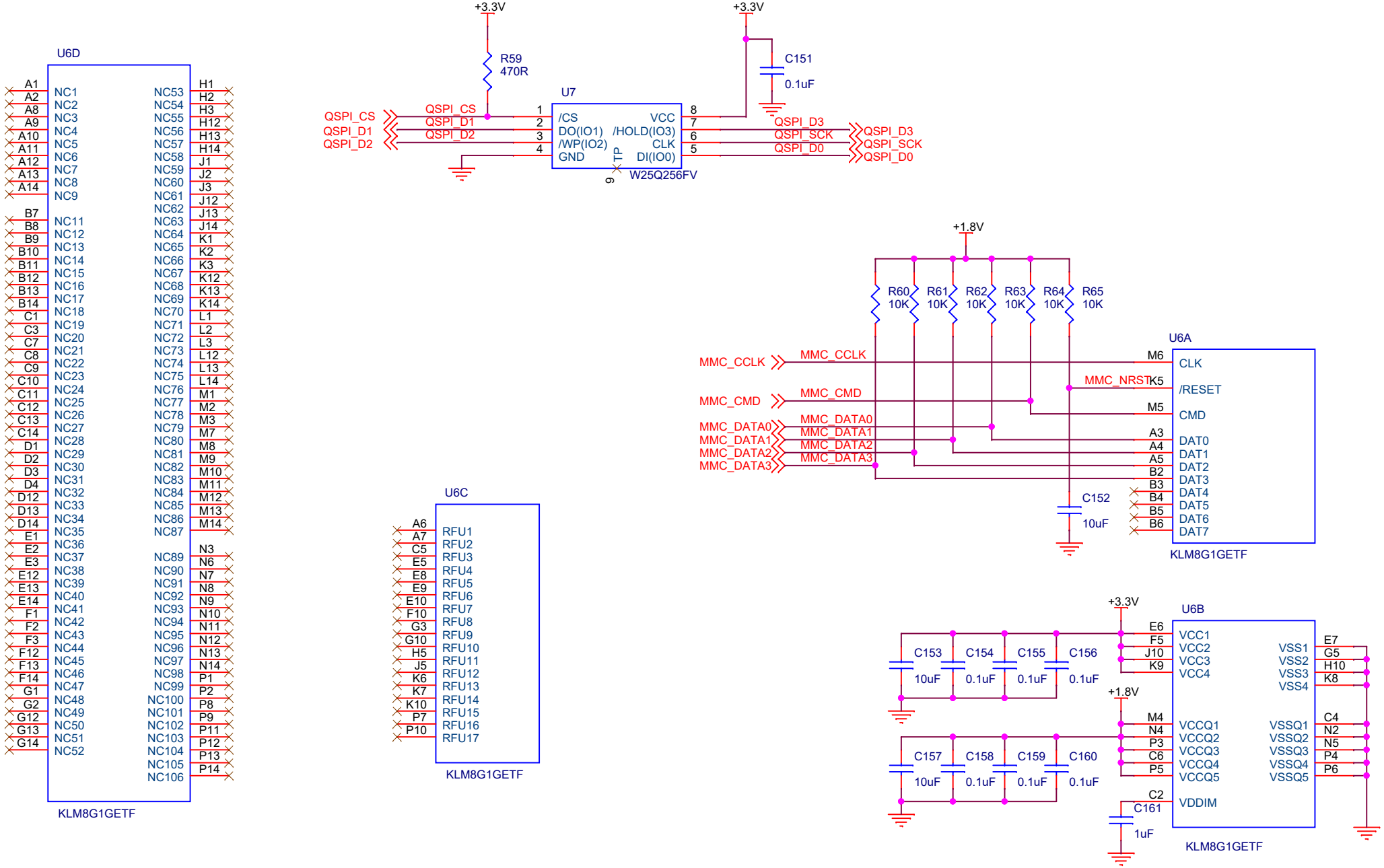

Design Name	ZYNQ-CORE	
Size A4	Page Name 09_eMMC	Rev 1.0
Date: Tuesday, April 23, 2024	Sheet 9 of 12	

Power On Sequnce:
1.0V -> 1.8V -> 1.35V -> 3.3V -> VCCIO

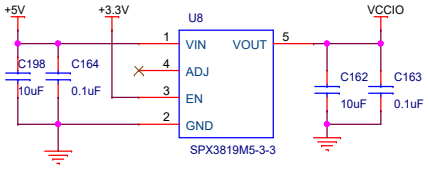

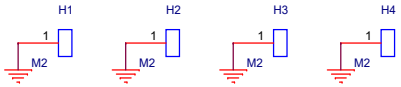

1.0V POWER@3A

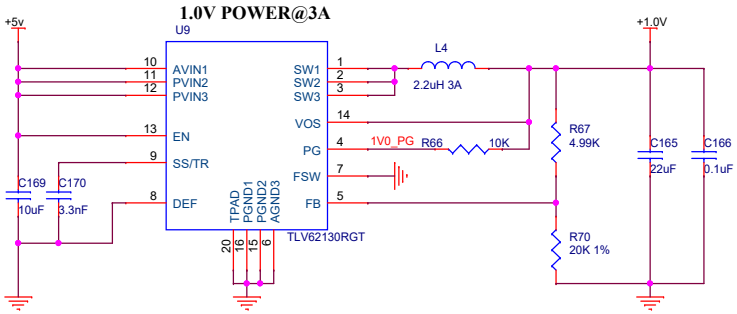

1.8V POWER@3A

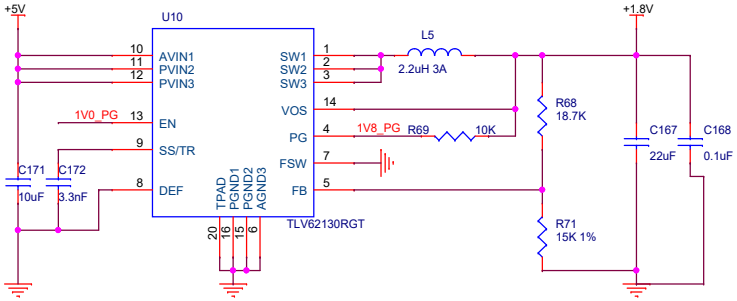

Vout=0.8*R1/R2+0.8

1.35V POWER@3A

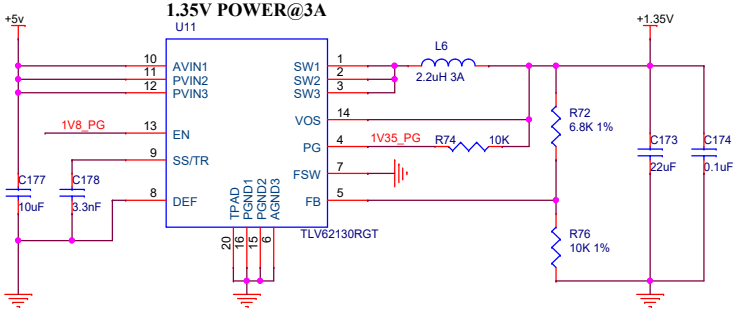

3.3V POWER@3A

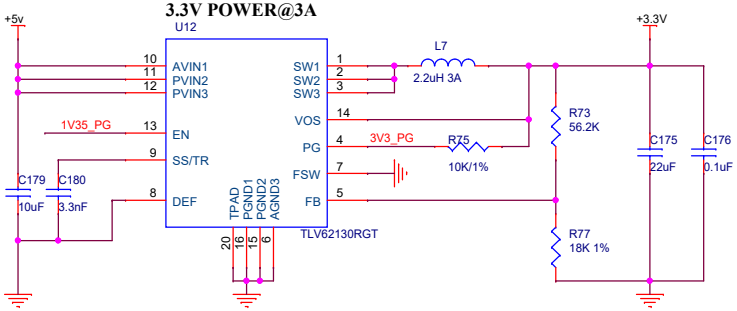

Design Name	ZYNQ-CORE	
Size A3	Page Name 10_POWER	Rev 1.0
Date: Wednesday, June 19, 2024	Sheet 10 of 12	

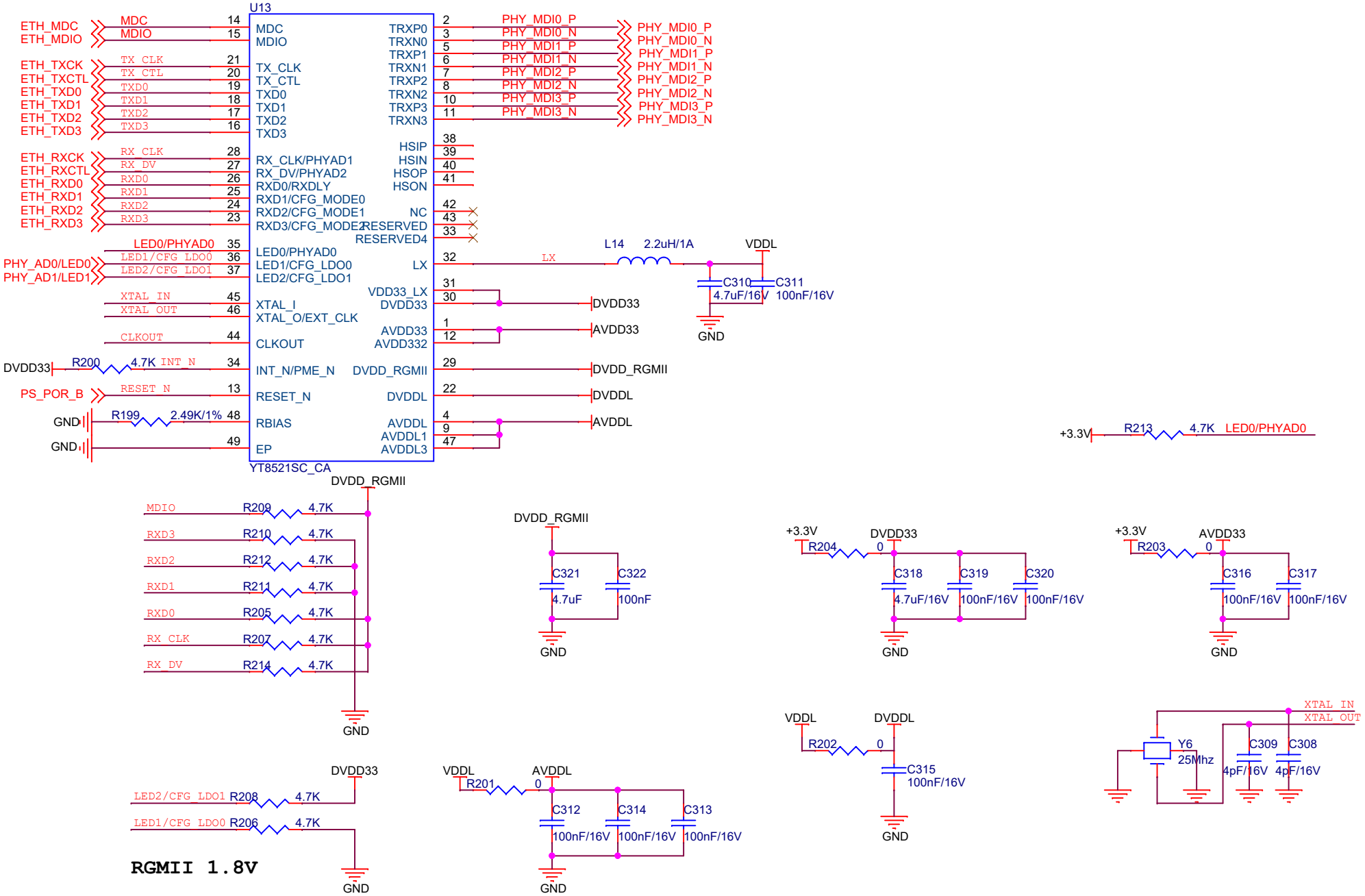

Title	<Title>	
Size A4	Document Number <Doc>	Rev <Rev>
Date: Tuesday, April 23, 2024	Sheet 11 of 12	

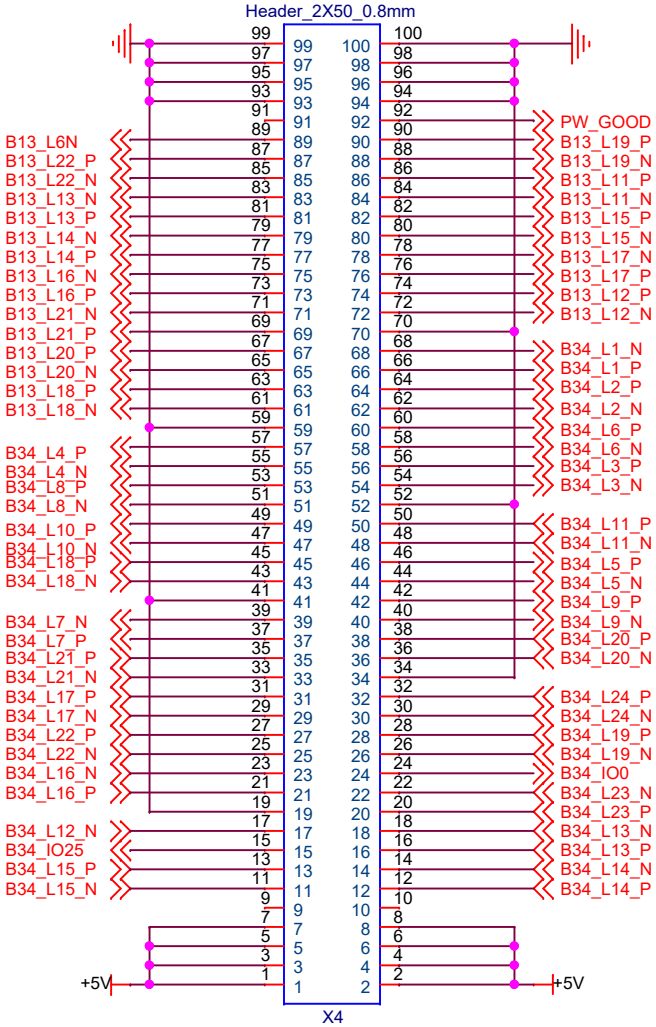

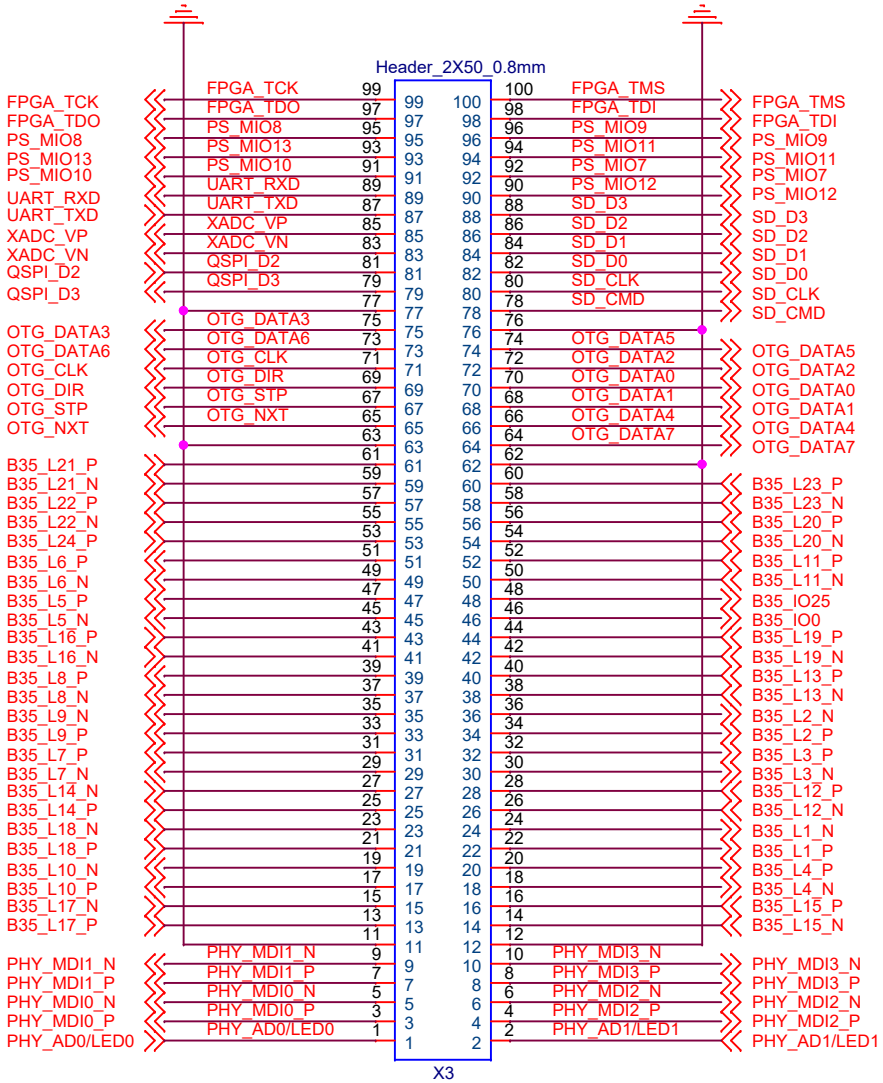

Design Name	ZYNQ-CORE	
Size A4	Page Name 12_CONNECTOR	Rev 1.0
Date: Friday, February 07, 2025	Sheet 12 of 12	