DC-DC POWER IN

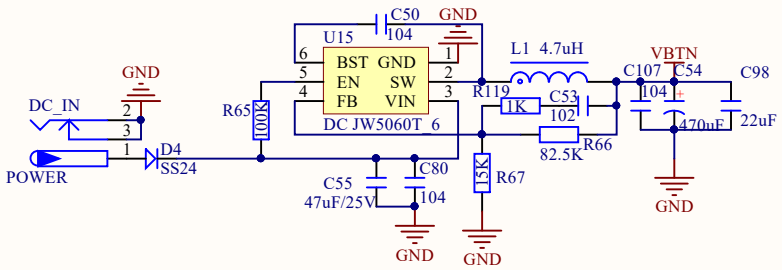

USB UART&USB POWER

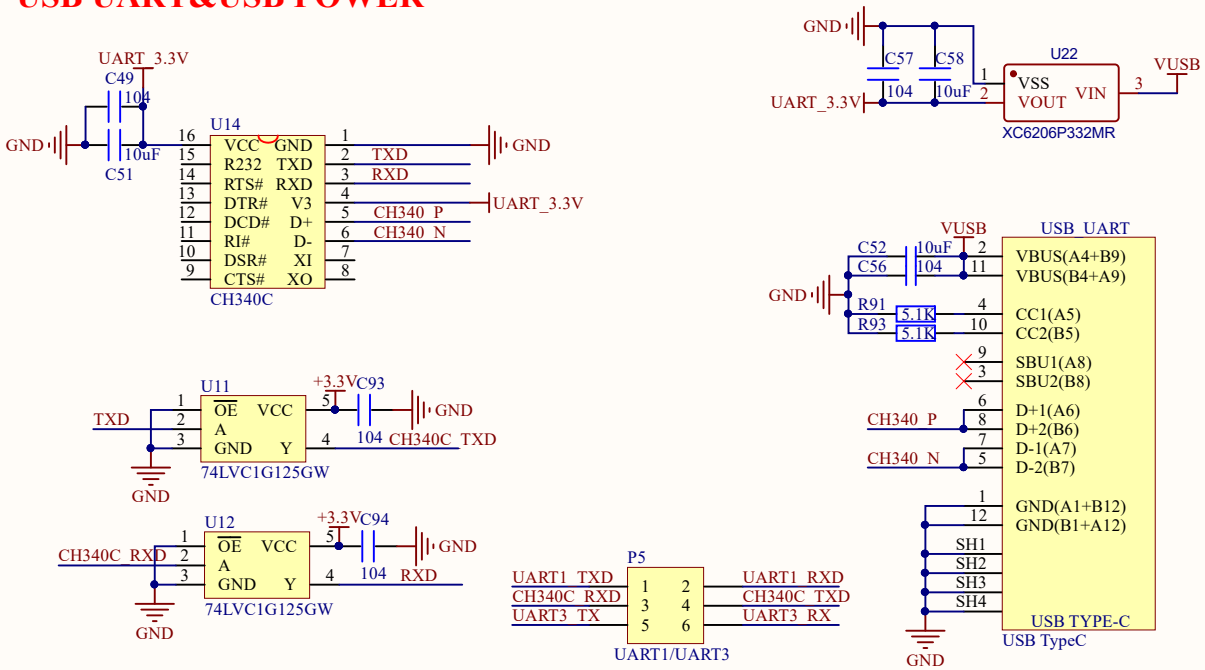

POWER SWITCH

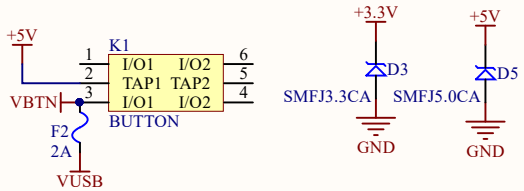

1.8V/3.3V POWER

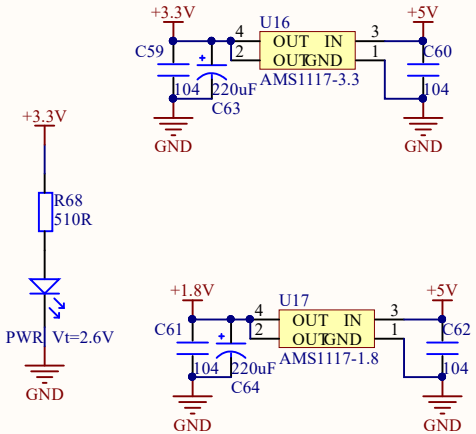

ON BOARD POWER SOURCE

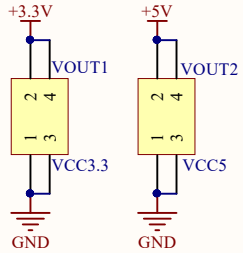

Title		
Size A4	Number	Revision
Date: 2022/7/26	Sheet of	
File: E:\ZYNQ\..\01_POWER&UART.SchDoc	Drawn By:	

CORE_IO

J1(对应核心板X4)

M1

+5V

			J1 2	2	1	J1 1	
			J1 4	4	3	J1 3	
			J1 6	6	5	J1 5	
			J1 8	8	7	J1 7	
			J1 10	10	9	J1 9	
T_MISO	B34 L14 P	N20	J1 12	12	11	J1 11	U20 B34 L15 N LCD_DE
IIC2_SDA	B34 L14 N	P20	J1 14	14	13	J1 13	T20 B34 L15 P LCD_VSYNC
LCD_HSYNC	B34 L13 P	N18	J1 16	16	15	J1 15	T19 B34 IO25 UART3_RX
LCD_CLK	B34 L13 N	P19	J1 18	18	17	J1 17	U19 B34 L12 N T_PEN
LCD_B7	B34 L23 P	N17	J1 20	20	19	J1 19	
LCD_B6	B34 L23 N	P18	J1 22	22	21	J1 21	V20 B34 L16 P LCD_B5
IIC2_SCL	B34 IO0	R19	J1 24	24	23	J1 23	W20 B34 L16 N LCD_B4
LCD_B3	B34 L19 N	R17	J1 26	26	25	J1 25	W19 B34 L22 N LCD_B1
LCD_B2	B34 L19 P	R16	J1 28	28	27	J1 27	W18 B34 L22 P LCD_B0
LCD_G7	B34 L24 N	P16	J1 30	30	29	J1 29	Y19 B34 L17 N LCD_G5
LCD_G6	B34 L24 P	P15	J1 32	32	31	J1 31	Y18 B34 L17 P LCD_G4
			J1 34	34	33	J1 33	V18 B34 L21 N LCD_G1
LCD_G3	B34 L20 N	R18	J1 36	36	35	J1 35	V17 B34 L21 P LCD_G0
LCD_G2	B34 L20 P	T17	J1 38	38	37	J1 37	Y16 B34 L7 P LCD_R5
LCD_R7	B34 L9 N	U17	J1 40	40	39	J1 39	Y17 B34 L7 N LCD_R4
LCD_R6	B34 L9 P	T16	J1 42	42	41	J1 41	
LCD_R3	B34 L5 N	T15	J1 44	44	43	J1 43	W16 B34 L18 N LCD_R1
LCD_R2	B34 L5 P	T14	J1 46	46	45	J1 45	V16 B34 L18 P LCD_R0
CMOS_D3	B34 L11 N	U15	J1 48	48	47	J1 47	W15 B34 L10 N CMOS_XCLK
CMOS_D4	B34 L11 P	U14	J1 50	50	49	J1 49	V15 B34 L10 P CMOS_PWDN
			J1 52	52	51	J1 51	Y14 B34 L8 N CMOS_D7
CMOS_D2	B34 L3 N	V13	J1 54	54	53	J1 53	W14 B34 L8 P CMOS_PCLK
CMOS_D1	B34 L3 P	U13	J1 56	56	55	J1 55	W13 B34 L4 N CMOS_D5
CMOS_D0	B34 L6 N	R14	J1 58	58	57	J1 57	V12 B34 L4 P CMOS_D6
CMOS_RESET	B34 L6 P	P14	J1 60	60	59	J1 59	
CMOS_VSYNC	B34 L2 N	U12	J1 62	62	61	J1 61	Y11 B13 L18 N
CMOS_HREF	B34 L2 P	T12	J1 64	64	63	J1 63	W11 B13 L18 P
CMOS_SDA	B34 L1 P	T11	J1 66	66	65	J1 65	Y13 B13 L20 N
CMOS_SCL	B34 L1 N	T10	J1 68	68	67	J1 67	Y12 B13 L20 P
			J1 70	70	69	J1 69	V11 B13 L21 P
	B13 L12 N	U10	J1 72	72	71	J1 71	V10 B13 L21 N
	B13 L12 P	T9	J1 74	74	73	J1 73	W10 B13 L16 P
	B13 L17 P	U9	J1 76	76	75	J1 75	W9 B13 L16 N
	B13 L17 N	U8	J1 78	78	77	J1 77	Y9 B13 L14 P
	B13 L15 N	W8	J1 80	80	79	J1 79	Y8 B13 L14 N
	B13 L15 P	V8	J1 82	82	81	J1 81	Y7 B13 L13 P
	B13 L11 N	V7	J1 84	84	83	J1 83	Y6 B13 L13 N
	B13 L11 P	U7	J1 86	86	85	J1 85	W6 B13 L22 N
	B13 L19 N	U5	J1 88	88	87	J1 87	V6 B13 L22 P
	B13 L19 P	T5	J1 90	90	89	J1 89	V5 B13 L6 N
			J1 92	92	91	J1 91	
			J1 94	94	93	J1 93	
			J1 96	96	95	J1 95	
			J1 98	98	97	J1 97	
			J1 100	100	99	J1 99	

ZYNQ7010&7020

J2(对应核心板X3)

M1

			J2 2	2	1	J2 1		PHY1_AD0/LED0
		PHY1_AD1/LED1	J2 4	4	3	J2 3		PHY1_MDI0_P
		PHY1_MDI2_P	J2 6	6	5	J2 5		PHY1_MDI0_N
		PHY1_MDI2_N	J2 8	8	7	J2 7		PHY1_MDI1_P
		PHY1_MDI3_P	J2 10	10	9	J2 9		PHY1_MDI1_N
		PHY1_MDI3_N	J2 12	12	11	J2 11		
B35_L15_N		F20	J2 14	14	13	J2 13	J20	HDMI_D2_P B35_L17_P
B35_L15_P		F19	J2 16	16	15	J2 15	H20	HDMI_D2_N B35_L17_N
B35_L4_N		D20	J2 18	18	17	J2 17	K19	HDMI_D1_P B35_L10_P
B35_L4_P		D19	J2 20	20	19	J2 19	J19	HDMI_D1_N B35_L10_N
B35_L1_P		C20	J2 22	22	21	J2 21	G19	HDMI_D0_P B35_L18_P
B35_L1_N		B20	J2 24	24	23	J2 23	G20	HDMI_D0_N B35_L18_N
B35_L12_N		K18	J2 26	26	25	J2 25	J18	HDMI_CLK_P B35_L14_P
B35_L12_P		K17	J2 28	28	27	J2 27	H18	HDMI_CLK_N B35_L14_N
B35_L3_N		D18	J2 30	30	29	J2 29	M20	LCD_BL B35_L7_N
B35_L3_P		E17	J2 32	32	31	J2 31	M19	T_CS B35_L7_P
B35_L2_P		B19	J2 34	34	33	J2 33	L19	HDMI_HPD B35_L9_P
B35_L2_N		A20	J2 36	36	35	J2 35	L20	B35_L9_N B35_L9_N
B35_L13_N		H17	J2 38	38	37	J2 37	M18	B35_L8_N B35_L8_N
B35_L13_P		H16	J2 40	40	39	J2 39	M17	B35_L8_P B35_L8_P
B35_L19_N		G15	J2 42	42	41	J2 41	G18	B35_L16_N B35_L16_N
B35_L19_P	PL_LED0	H15	J2 44	44	43	J2 43	G17	B35_L16_P B35_L16_P
B35_IO0	GBC_KEY	G14	J2 46	46	45	J2 45	E19	B35_L5_N B35_L5_N
B35_IO25	UART3_TX	J15	J2 48	48	47	J2 47	E18	IIC1_SCL B35_L5_P
B35_L11_N	LCD_RST	L17	J2 50	50	49	J2 49	F17	IIC1_SDA B35_L6_N
B35_L11_P		L16	J2 52	52	51	J2 51	F16	TPAD B35_L6_P
B35_L20_N		J14	J2 54	54	53	J2 53	K16	PL_KEY1 B35_L24_P
B35_L20_P		K14	J2 56	56	55	J2 55	L15	PL_LED1 B35_L22_N
B35_L23_N		M15	J2 58	58	57	J2 57	L14	PL_KEY0 B35_L22_P
B35_L23_P	BEEP	M14	J2 60	60	59	J2 59	N16	PL_RESET B35_L21_N
			J2 62	62	61	J2 61	N15	GBC_LED B35_L21_P
		OTG_DATA7	J2 64	64	63	J2 63		
		OTG_DATA4	J2 66	66	65	J2 65		OTG_NXT
		OTG_DATA1	J2 68	68	67	J2 67		OTG_STP
		OTG_DATA0	J2 70	70	69	J2 69		OTG_DIR
		OTG_DATA2	J2 72	72	71	J2 71		OTG_CLK
		OTG_DATA5	J2 74	74	73	J2 73		OTG_DATA6
			J2 76	76	75	J2 75		OTG_DATA3
		SD_CMD	J2 78	78	77	J2 77		
		SD_CLK	J2 80	80	79	J2 79		QSPI_D3 BOOT_MODE1
		SD_D0	J2 82	82	81	J2 81		QSPI_D2 BOOT_MODE0
		SD_D1	J2 84	84	83	J2 83		XADC_V_N
		SD_D2	J2 86	86	85	J2 85		XADC_V_P
		SD_D3	J2 88	88	87	J2 87		UART1_TXD
PS_KEY0	PS_MIO12		J2 90	90	89	J2 89		UART1_RXD
PS_LED0	PS_MIO7		J2 92	92	91	J2 91		PS_MIO10 SD_CD
PS_KEY1	PS_MIO11		J2 94	94	93	J2 93		PS_MIO13
OTG_RESETN	PS_MIO9		J2 96	96	95	J2 95		PS_MIO8 PS_LED1
	FPGA_TDI		J2 98	98	97	J2 97		FPGA_TDO
	FPGA_TMS		J2 100	100	99	J2 99		FPGA_TCK

EXT_IO

J3

		B35_L20_P	1	2	B35_L23_N		
		B35_L20_N	3	4	B35_L11_P		
T_PEN		B34_L12_N	5	6	B34_L14_P	T_MISO	
T_CS		B35_L7_P	7	8	B35_L7_N	LCD_BL	
LCD_DE		B34_L15_N	9	10	B34_L15_P	LCD_VSYNC	
LCD_HSYNC		B34_L13_P	11	12	B34_L13_N	LCD_CLK	
LCD_B7		B34_L23_P	13	14	B34_L23_N	LCD_B6	
LCD_B5		B34_L16_P	15	16	B34_L16_N	LCD_B4	
LCD_B3		B34_L19_N	17	18	B34_L19_P	LCD_B2	
LCD_B1		B34_L22_N	19	20	B34_L22_P	LCD_B0	
LCD_G7		B34_L24_N	21	22	B34_L24_P	LCD_G6	
LCD_G5		B34_L17_N	23	24	B34_L17_P	LCD_G4	
LCD_G3		B34_L20_N	25	26	B34_L20_P	LCD_G2	
LCD_G1		B34_L21_N	27	28	B34_L21_P	LCD_G0	
LCD_R7		B34_L9_N	29	30	B34_L9_P	LCD_R6	
LCD_R5		B34_L7_P	31	32	B34_L7_N	LCD_R4	
LCD_R3		B34_L5_N	33	34	B34_L5_P	LCD_R2	
LCD_R1		B34_L18_N	35	36	B34_L18_P	LCD_R0	
GND			37	38		+3.3V	
GND			39	40		+5V	

Header 20X2

C48
104

GND

J4

		B13_L6_N	1	2	B34_L1_P		
		B13_L19_N	3	4	B13_L19_P		
		B13_L11_N	5	6	B13_L11_P		
		B13_L15_N	7	8	B13_L15_P		
		B13_L17_P	9	10	B13_L17_N		
		B13_L12_N	11	12	B13_L12_P		
		B13_L22_N	13	14	B13_L22_P		
		B13_L13_P	15	16	B13_L13_N		
		B13_L14_P	17	18	B13_L14_N		
		B13_L16_P	19	20	B13_L16_N		
		B13_L21_P	21	22	B13_L21_N		
		B13_L20_N	23	24	B13_L20_P		
		B13_L18_N	25	26	B13_L18_P		
CMOS_D2		B34_L3_N	27	28	B34_L3_P	CMOS_D1	
CMOS_D4		B34_L11_P	29	30	B34_L11_N	CMOS_D3	
CMOS_D6		B34_L4_P	31	32	B34_L4_N	CMOS_D5	
CMOS_PCLK		B34_L8_P	33	34	B34_L8_N	CMOS_D7	
CMOS_PWDN		B34_L10_P	35	36	B34_L10_N	CMOS_XCLK	
GND			37	38		+3.3V	
GND			39	40		+5V	

Header 20X2

C101
104

GND

Title		
Size A4	Number	Revision
Date: 2022/7/26	Sheet of	
File: E:\ZYNQ\..\02_IO.SchDoc	Drawn By:	

BOOT OPTION

	MIO 4	MIO 5
BOOT_CFG	1	2
JTAG	ON	ON
NAND	OFF	ON
QSPI	ON	OFF
SD Card	OFF	OFF

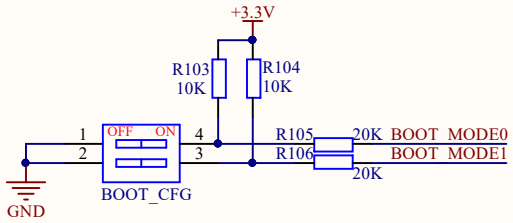

RGB LCD

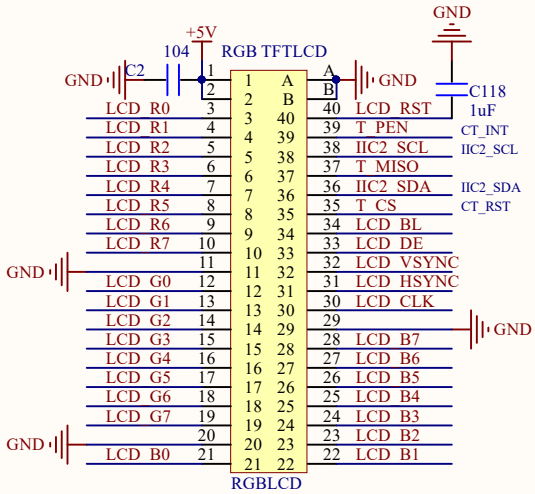

OLED&CAMERA

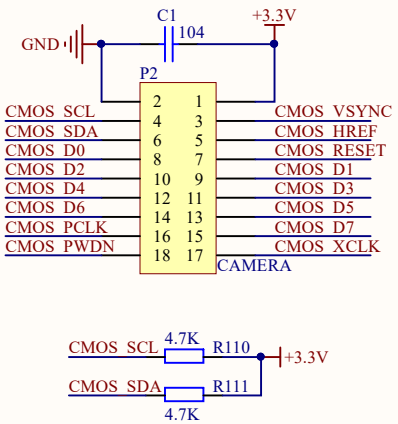

ATK MODULE

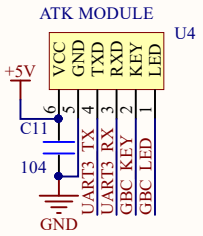

EEPROM

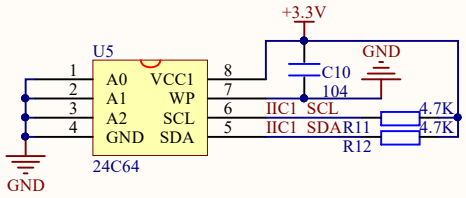

LED

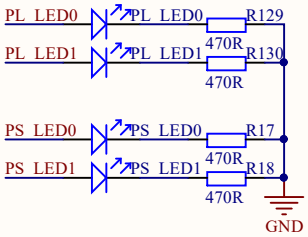

KEY

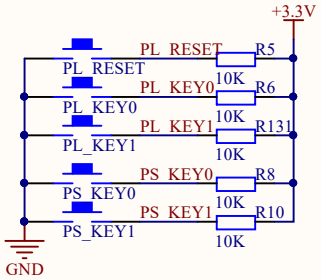

JTAG

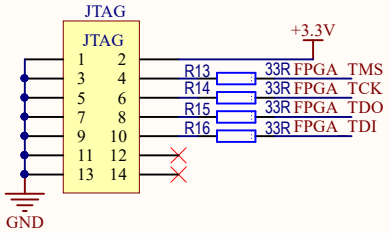

RTC

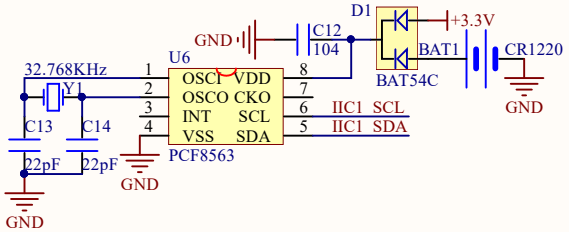

TOUCH KEY

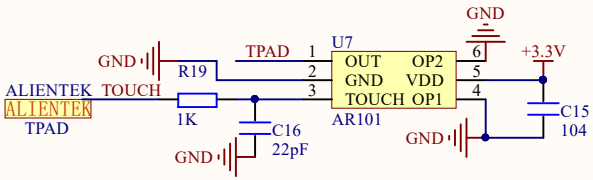

BEEP

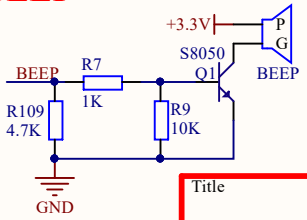

Title		
Size A4	Number	Revision
Date: 2022/7/26		Sheet of
File: E:\ZYNQ\..\03_DEVICE.SchDoc		Drawn By:

ETHERNET(PS)

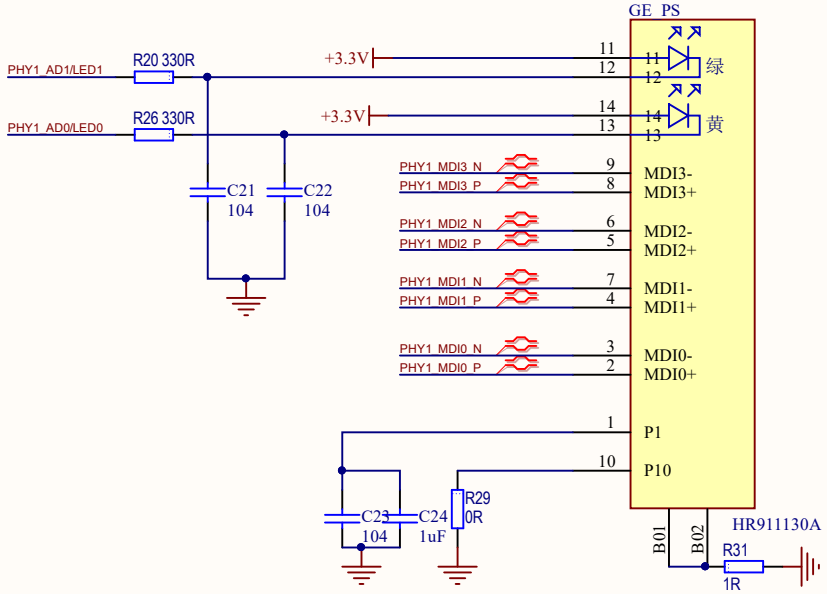

SD CARD

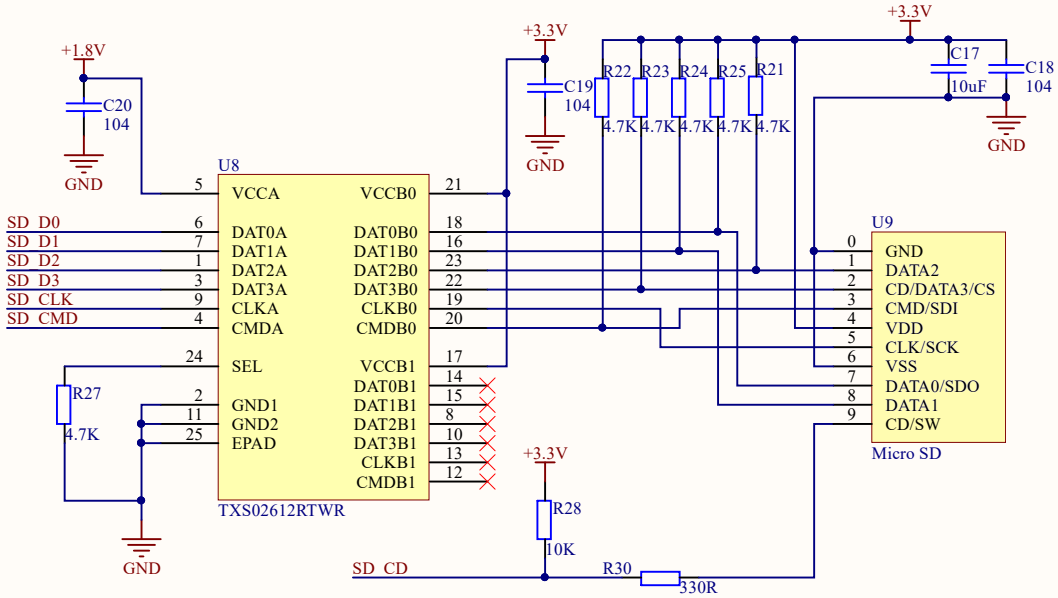

EXT_IO

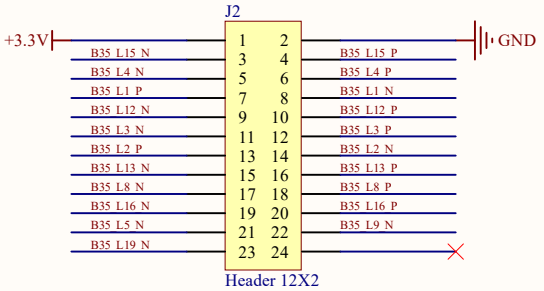

Title		
Size A4	Number	Revision
Date: 2022/7/26	Sheet of	
File: E:\ZYNQ\..\04_ETH&SD&EXT.SchDoc	Drawn By:	

HDMI

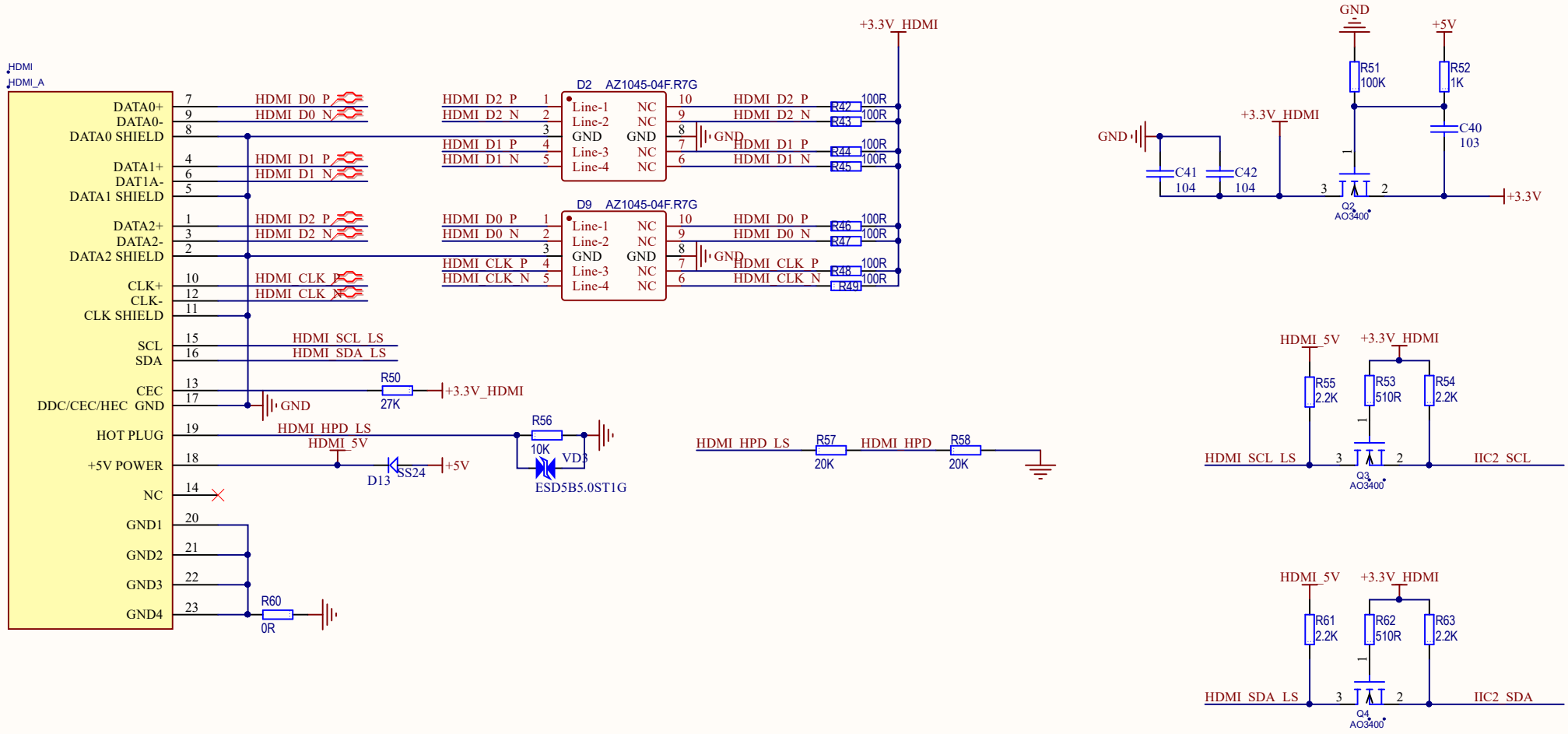

Title		
Size A4	Number	Revision
Date: 2022/7/26		Sheet of
File: E:\ZYNQ\..\05_HDMI.SchDoc		Drawn By:

USB OTG

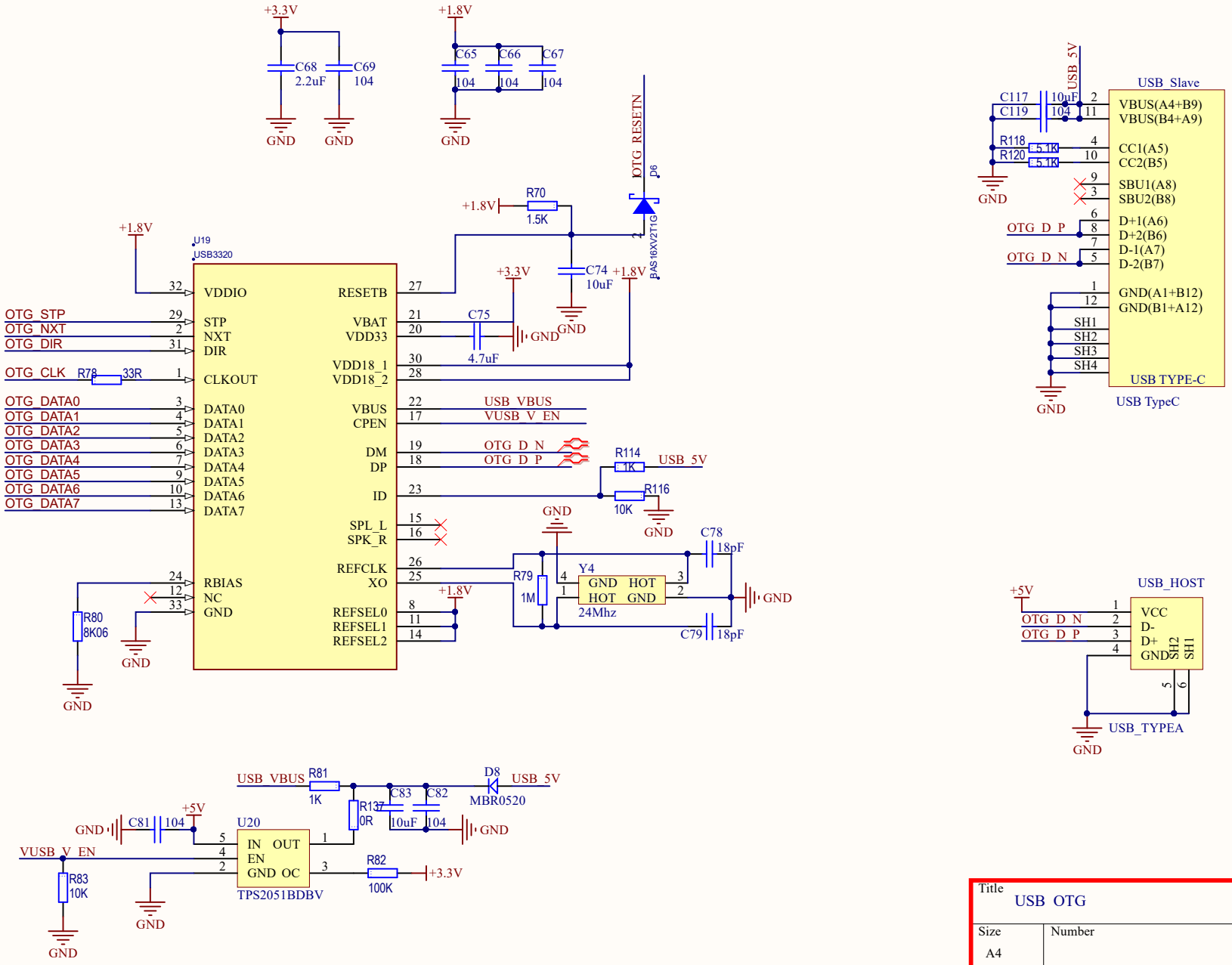

Title	USB OTG		
Size A4	Number	V1.0	Revision
Date:	2022/7/26	Sheet of	
File:	E:\ZYNQ\..\06_USB.SchDoc	Drawn By:	