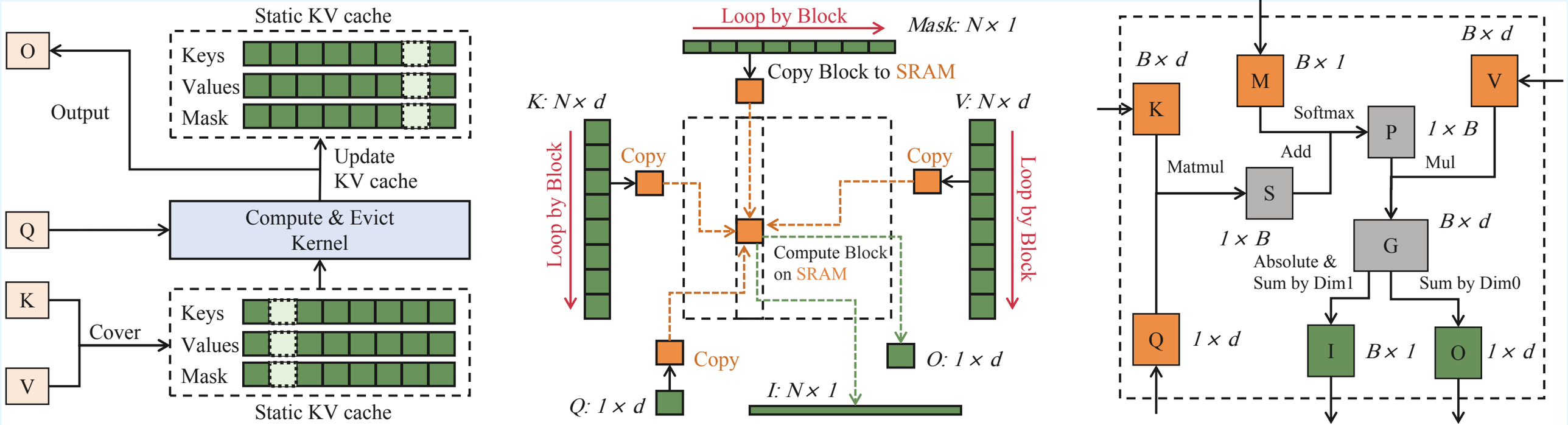
Static KV cache
Keys
Values
Mask
O
Output
Update
KV cache
Q
Compute & Evict
Kernel
K
V
Cover
Keys
Values
Mask
Static KV cache
Loop by Block
Mask: N × 1
Copy Block to SRAM
K: N × d
V: N × d
Loop by Block
Copy
Copy
Loop by Block
Compute Block
on SRAM
Copy
O: 1 × d
Q: 1 × d
I: N × 1
B × d
B × d
M
B × 1
V
K
Softmax
P
1 × B
Add
Matmul
Mul
S
1 × B
G
B × d
Absolute &
Sum by Dim1
Sum by Dim0
Q
1 × d
I
B × 1
O
1 × d