Prática de Física dos Dispositivos Eletrônicos

FGA0100

Laboratório-11

Transistores de Junção Bipolares (NPN e PNP)

01/2022

FGA **Universidade de Brasília**

Dispositivos Semicondutores de Três Terminais

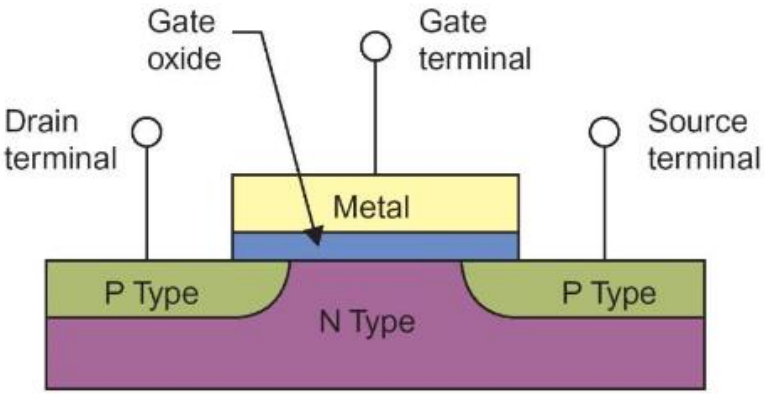

MOSFET

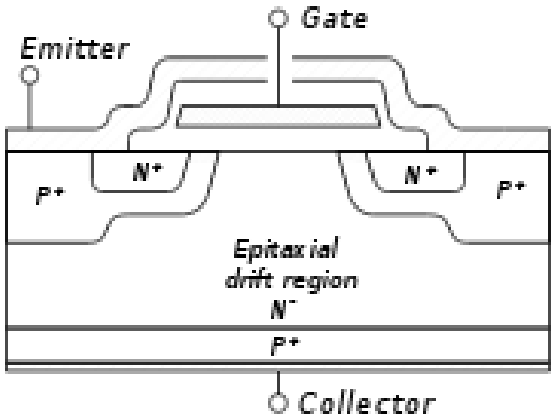

IGBT

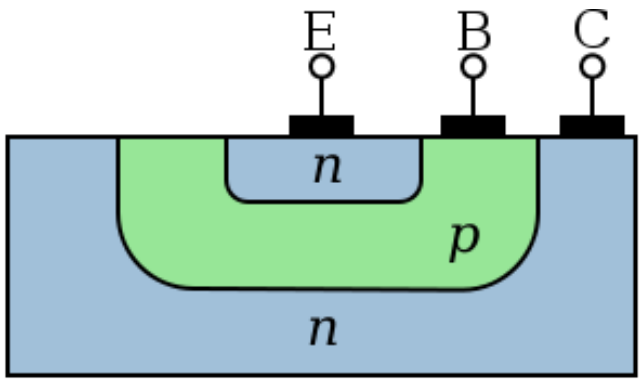

Bipolar

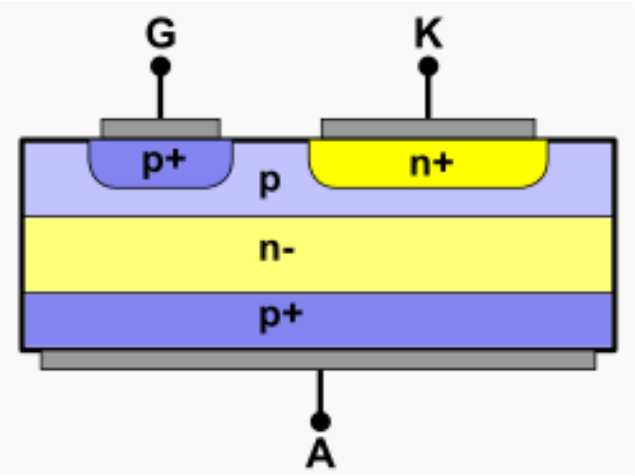

Tiristor

Transistores de Junção Bipolares

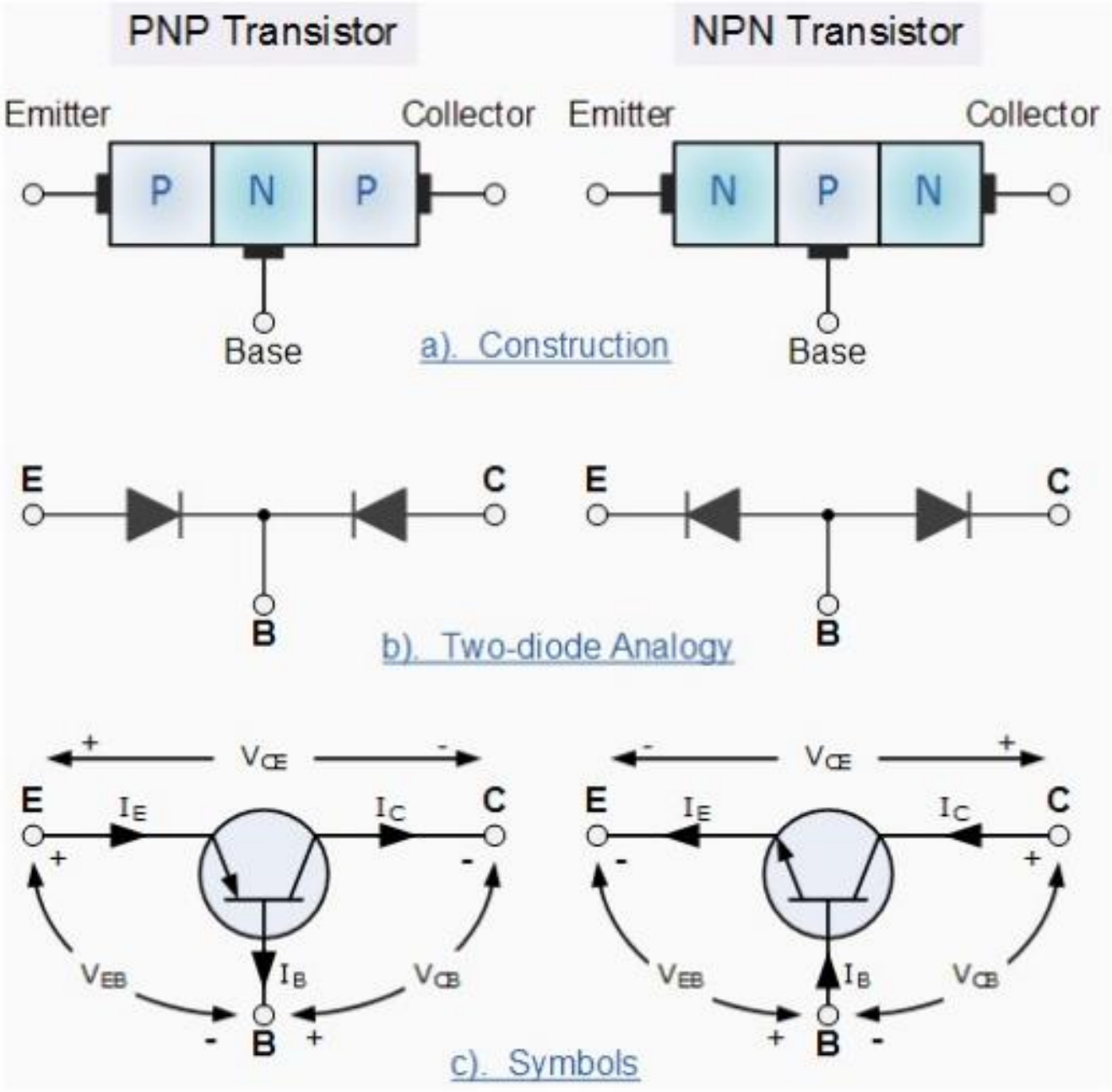

http://www.kingtronics.cn/archives/2011_6.html

Transistores NPN

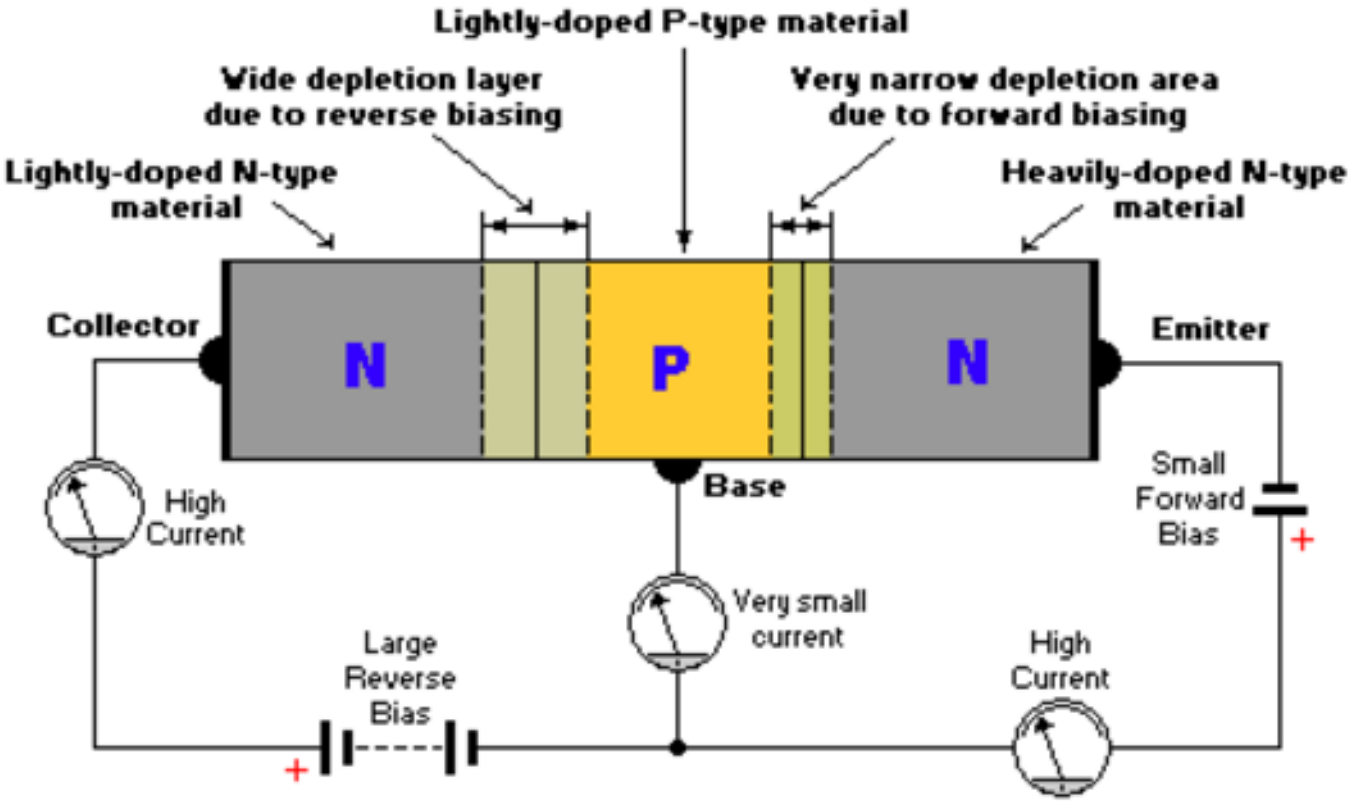

Fabricação Planar:

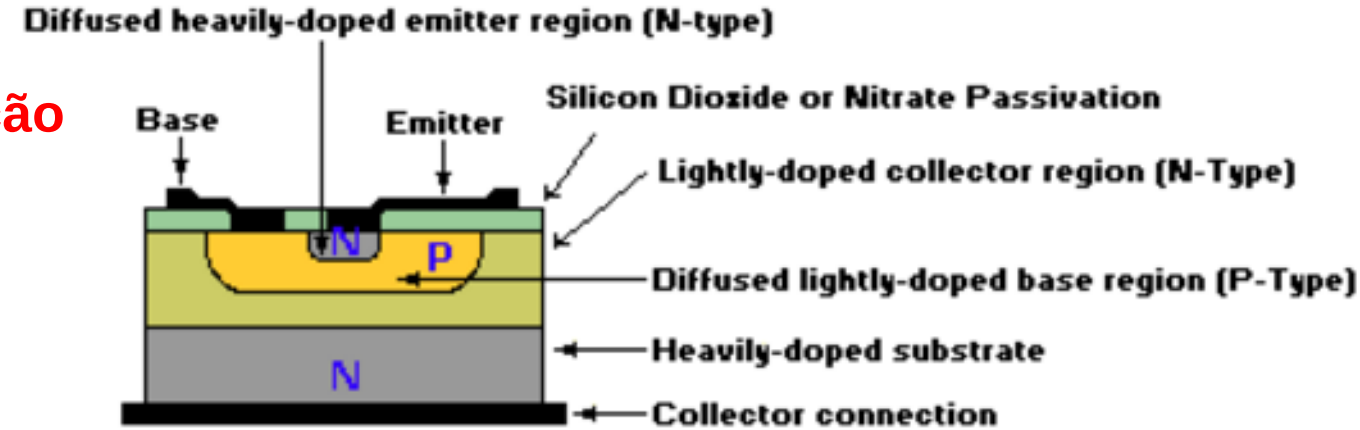

Medida do Ganho de Corrente
Transistores NPN e PNP

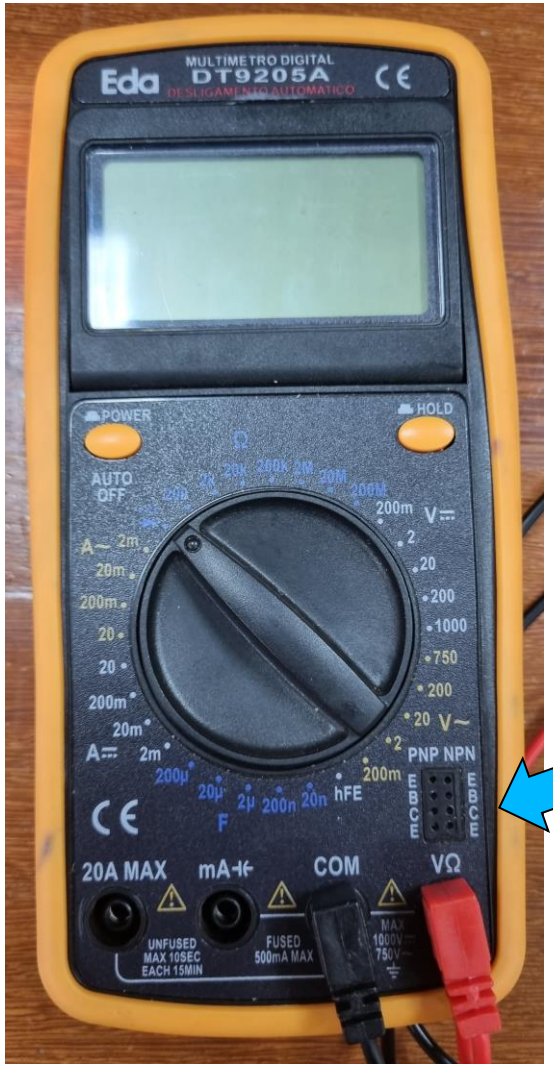

$$\beta = \frac{I_{CE}}{I_B}$$

Seletor: hFE

Multímetro Digital DT9205A

FAIRCHILD SEMICONDUCTOR®

BC546/547/548/549/550

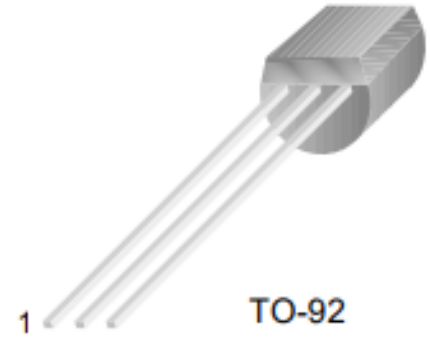

1. Collector 2. Base 3. Emitter

Switching and Applications

- High Voltage: BC546, V_{CEO}=65V
- Low Noise: BC549, BC550
- Complement to BC556 ... BC560

Electrical Characteristics T_a=25°C unless otherwise noted

Symbol	Parameter	Test Condition	Min.	Typ.	Max.	Units
I_{CBO}	Collector Cut-off Current	V_{CB}=30V, I_E=0			15	nA
h_{FE}	DC Current Gain	V_{CE}=5V, I_C=2mA	110		800	
V_{CE} (sat)	Collector-Emitter Saturation Voltage	I_C=10mA, I_B=0.5mA I_C=100mA, I_B=5mA		90 200	250 600	mV mV
V_{BE} (sat)	Base-Emitter Saturation Voltage	I_C=10mA, I_B=0.5mA I_C=100mA, I_B=5mA		700 900		mV mV
V_{BE} (on)	Base-Emitter On Voltage	V_{CE}=5V, I_C=2mA V_{CE}=5V, I_C=10mA	580	660	700 720	mV mV
f_T	Current Gain Bandwidth Product	V_{CE}=5V, I_C=10mA, f=100MHz		300		MHz
C_{ob}	Output Capacitance	V_{CB}=10V, I_E=0, f=1MHz		3.5	6	pF
C_{ib}	Input Capacitance	V_{EB}=0.5V, I_C=0, f=1MHz		9		pF
NF	Noise Figure : BC546/547/548 : BC549/550 : BC549 : BC550	V_{CE}=5V, I_C=200μA f=1KHz, R_G=2KΩ V_{CE}=5V, I_C=200μA R_G=2KΩ, f=30~15000MHz		2 1.2 1.4 1.4	10 4 4 3	dB dB dB dB

h_{FE} Classification

Classification	A	B	C
h_{FE}	110 ~ 220	200 ~ 450	420 ~ 800

BC547

NPN General Purpose Amplifier

Absolute Maximum Ratings*

TA = 25°C unless otherwise noted

Symbol	Parameter	Value	Units
V_{CEO}	Collector-Emitter Voltage	45	V
V_{CES}	Collector-Base Voltage	50	V
V_{EBO}	Emitter-Base Voltage	6.0	V
I_C	Collector Current - Continuous	500	mA
T_J, T_{stg}	Operating and Storage Junction Temperature Range	-55 to +150	°C

*These ratings are limiting values above which the serviceability of any semiconductor device may be impaired.

NOTES:
1) These ratings are based on a maximum junction temperature of 150 degrees C.
2) These are steady state limits. The factory should be consulted on applications involving pulsed or low duty cycle operations.

BC547

V_{DC} / R_1 =>

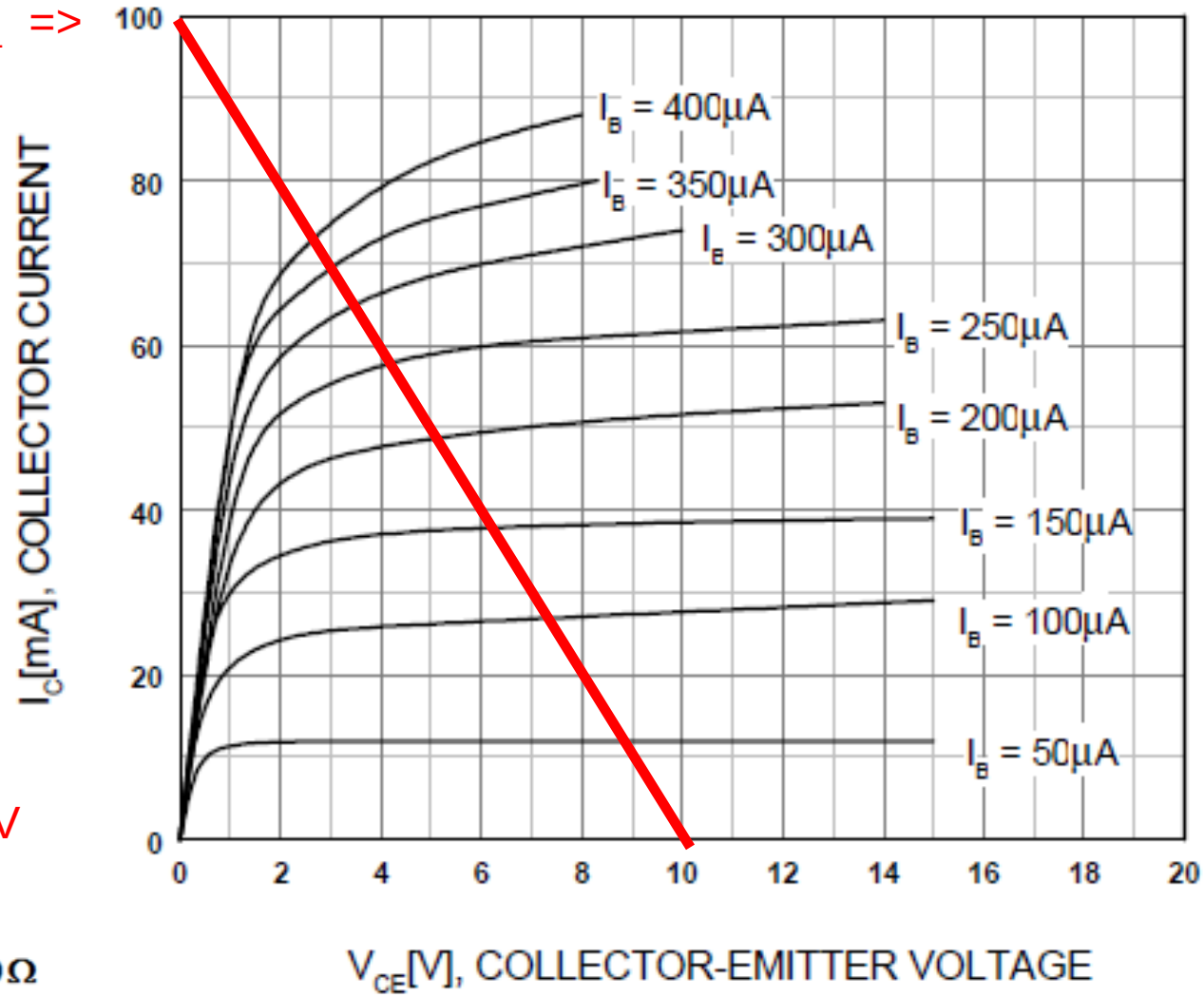

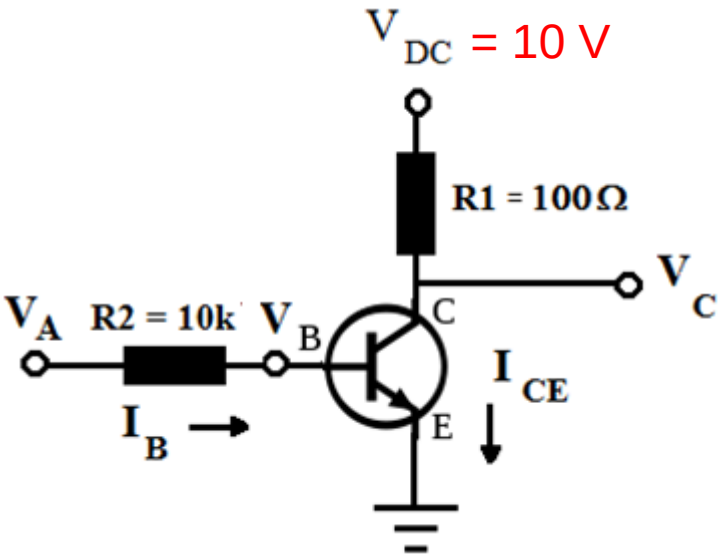

Figure 1. Static Characteristic

FAIRCHILD SEMICONDUCTOR®

BC556/557/558/559/560

TO-92

1. Collector 2. Base 3. Emitter

Switching and Amplifier

- High Voltage: BC556, V_{CEO}= -65V
- Low Noise: BC559, BC560
- Complement to BC546 ... BC 550

Electrical Characteristics T_a=25°C unless otherwise noted

Symbol	Parameter	Test Condition	Min.	Typ.	Max.	Units
I_{CBO}	Collector Cut-off Current	V_{CB}= -30V, I_E=0			-15	nA
h_{FE}	DC Current Gain	V_{CE}= -5V, I_C=2mA	110		800	
V_{CE} (sat)	Collector-Emitter Saturation Voltage	I_C= -10mA, I_B= -0.5mA I_C= -100mA, I_B= -5mA		-90 -250	-300 -650	mV mV
V_{BE} (sat)	Collector-Base Saturation Voltage	I_C= -10mA, I_B= -0.5mA I_C= -100mA, I_B= -5mA		-700 -900		mV mV
V_{BE} (on)	Base-Emitter On Voltage	V_{CE}= -5V, I_C= -2mA V_{CE}= -5V, I_C= -10mA	-600	-660	-750 -800	mV mV
f_T	Current Gain Bandwidth Product	V_{CE}= -5V, I_C= -10mA, f=10MHz		150		MHz
C_{ob}	Output Capacitance	V_{CB}= -10V, I_E=0, f=1MHz			6	pF
NF	Noise Figure : BC556/557/558 : BC559/560 : BC559 : BC560	V_{CE}= -5V, I_C= -200μA f=1KHz, R_G=2KΩ V_{CE}= -5V, I_C= -200μA R_G=2KΩ, f=30~15000MHz		2 1 1.2 1.2	10 4 4 2	dB dB dB dB

h_{FE} Classification

Classification	A	B	C
h_{FE}	110 ~ 220	200 ~ 450	420 ~ 800

BC 558

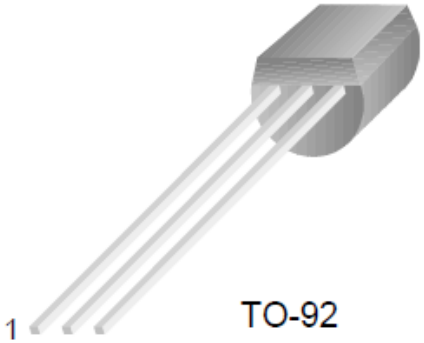

TO-92

1. Collector 2. Base 3. Emitter

PNP Epitaxial Silicon Transistor

Absolute Maximum Ratings T_a=25°C unless otherwise noted

Symbol	Parameter	Value	Units
V_{CBO}	Collector-Base Voltage		
	: BC556	-80	V
	: BC557/560	-50	V
	: BC558/559	-30	V
V_{CEO}	Collector-Emitter Voltage		
	: BC556	-65	V
	: BC557/560	-45	V
	: BC558/559	-30	V
V_{EBO}	Emitter-Base Voltage	-5	V
I_C	Collector Current (DC)	-100	mA
P_C	Collector Power Dissipation	500	mW
T_J	Junction Temperature	150	°C
T_{STG}	Storage Temperature	-65 ~ 150	°C

BC558

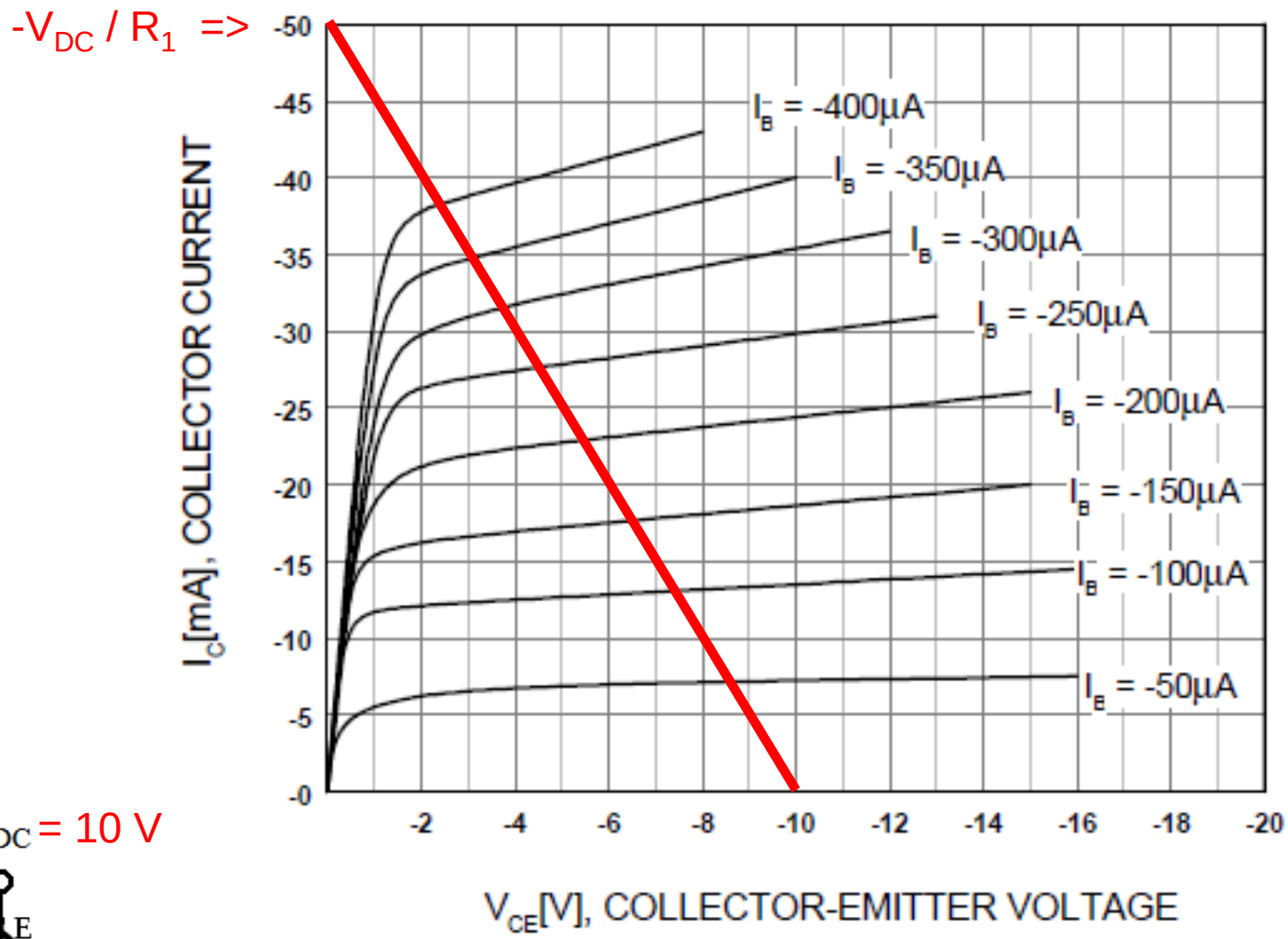

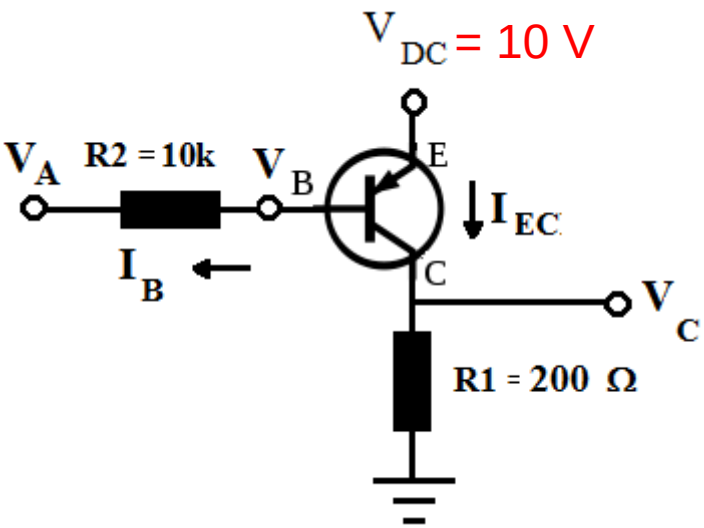

Figure 1. Static Characteristic

Curva I_{CE} vs. V_{CE} do Transistor NPN
Osciloscópio Modo X-Y

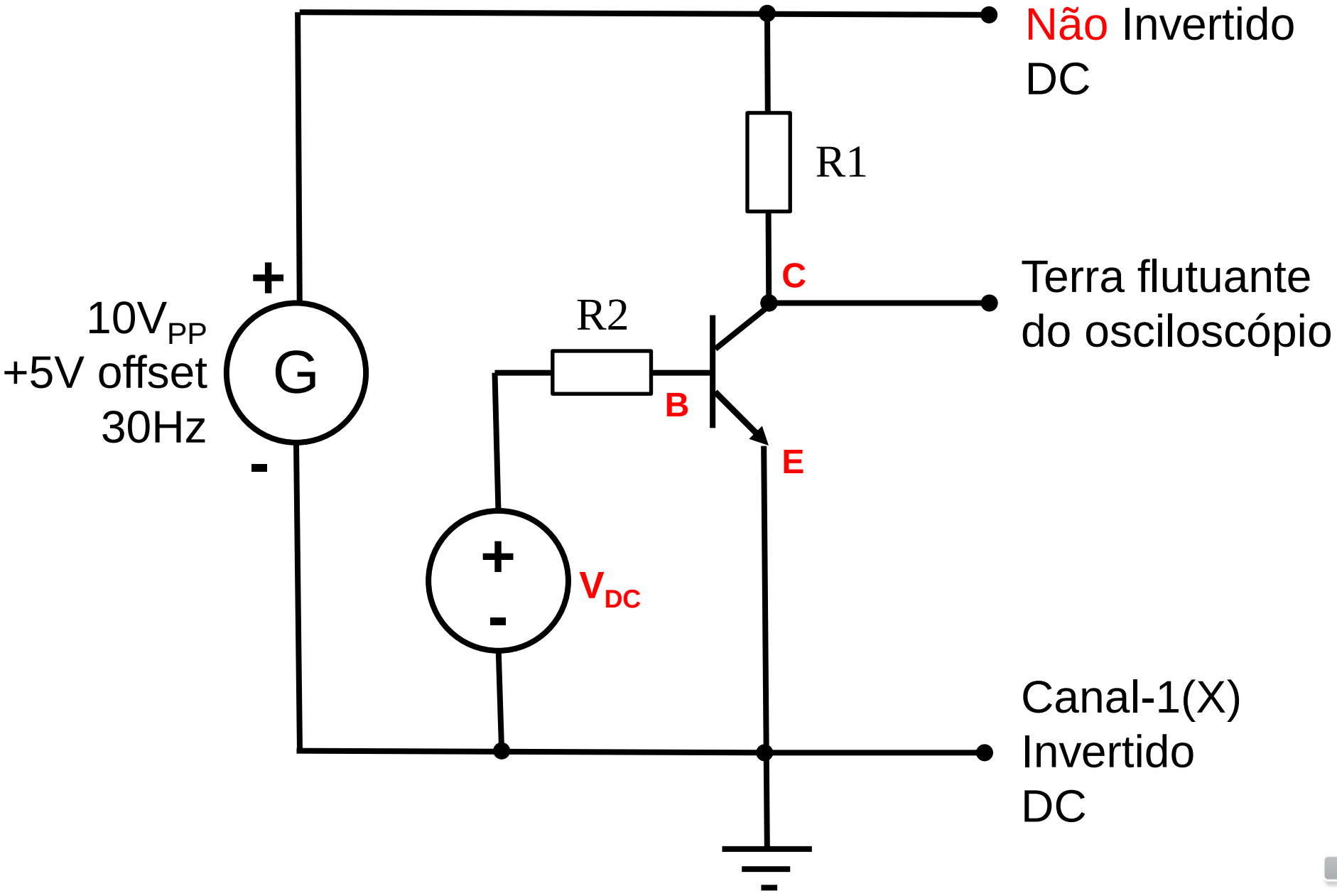

Curva I_{EC} vs. V_{EC} do Transistor PNP

Osciloscópio Modo X-Y

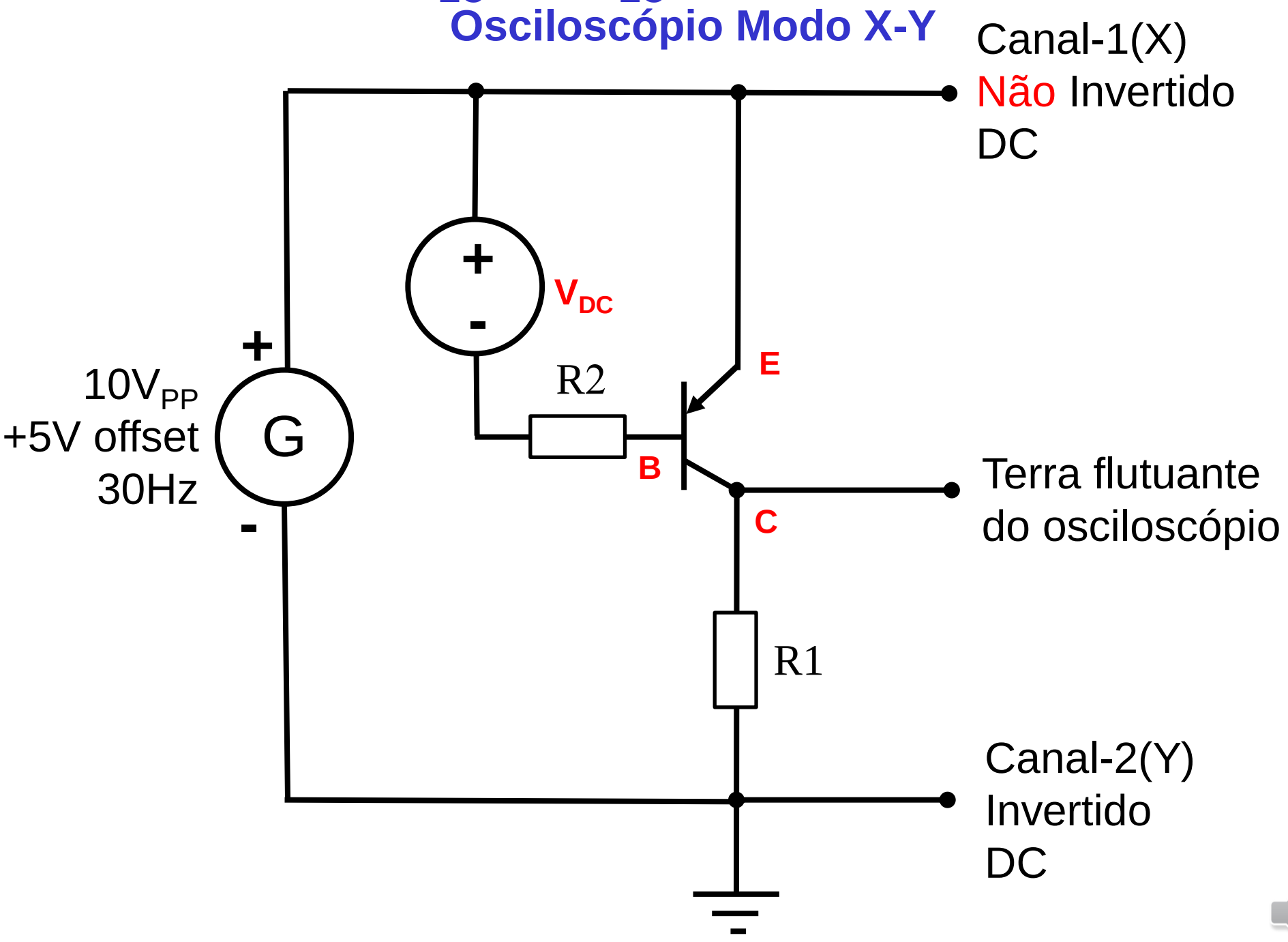

BJT Early Effect

Modulação do Comprimento Efetivo da Base

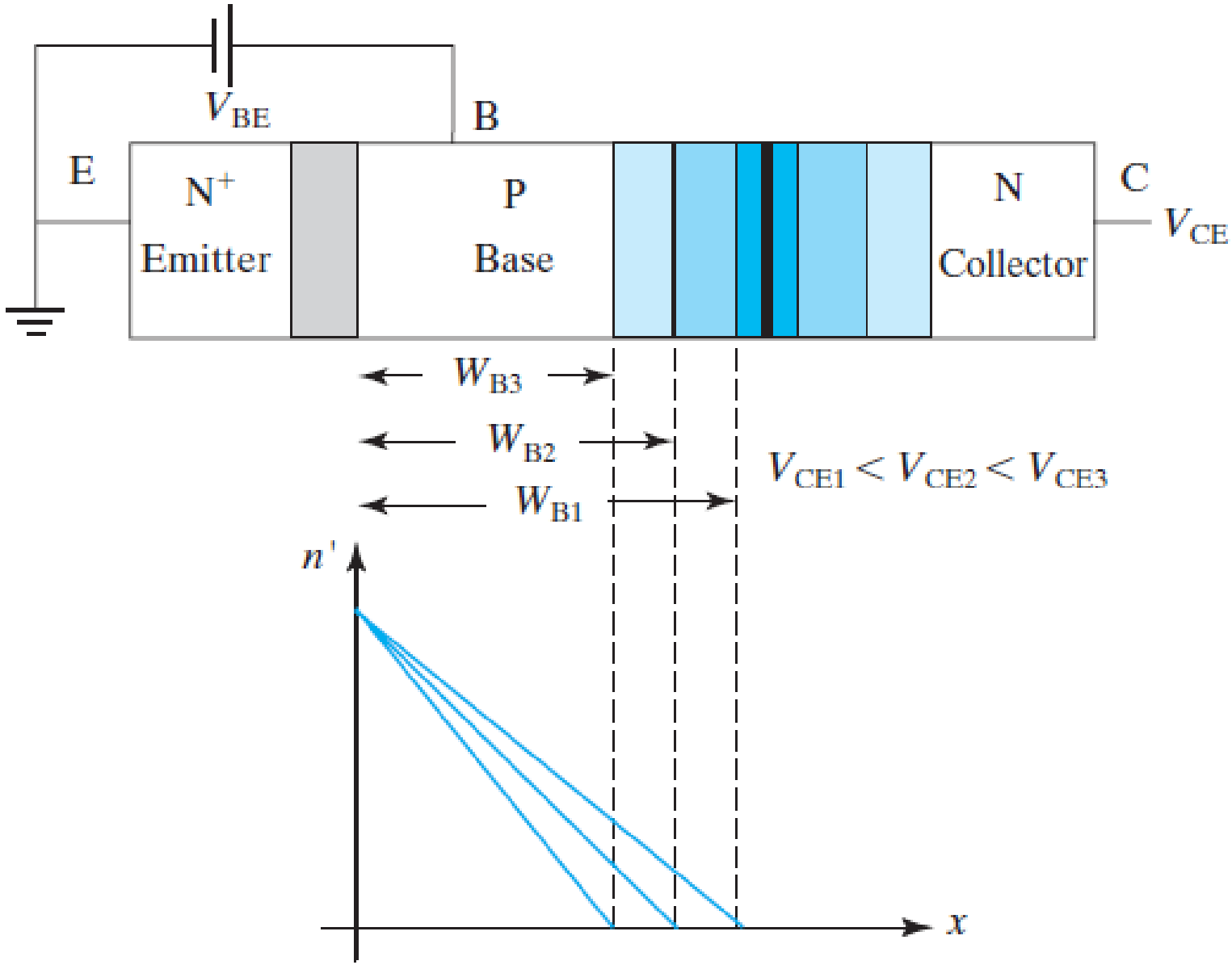

https://people.eecs.berkeley.edu/~hu/Chenming-Hu_ch8.pdf

BJT Early Effect (NPN e PNP)

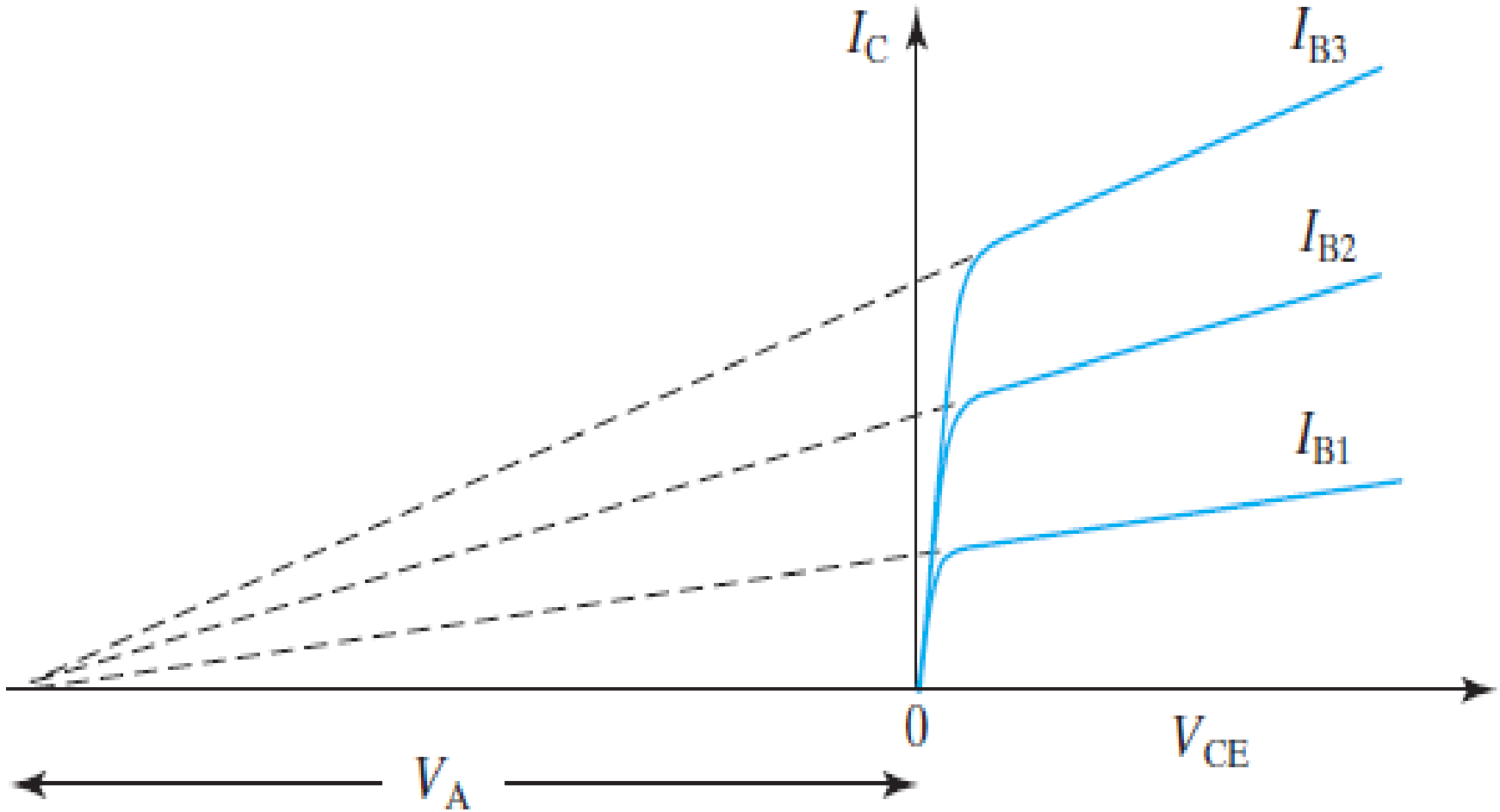

https://people.eecs.berkeley.edu/~hu/Chenming-Hu_ch8.pdf

Exemplo LTspice: Transistor BJT NPN BC547C

Plotar: Vce x Ib e Ice x Ib com Va = 0 a 9V

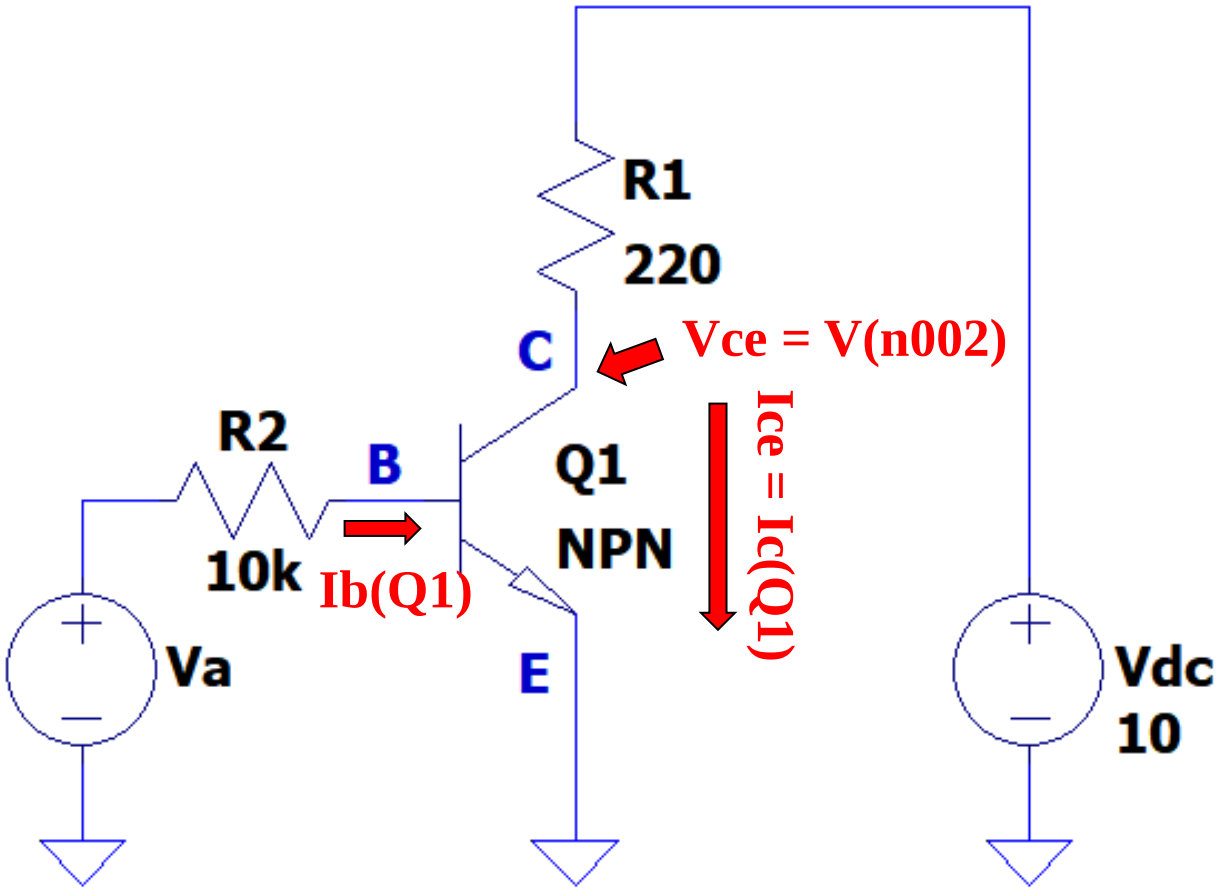

.dc Va 0 9 0.01

curva_npn_BC547C.asc

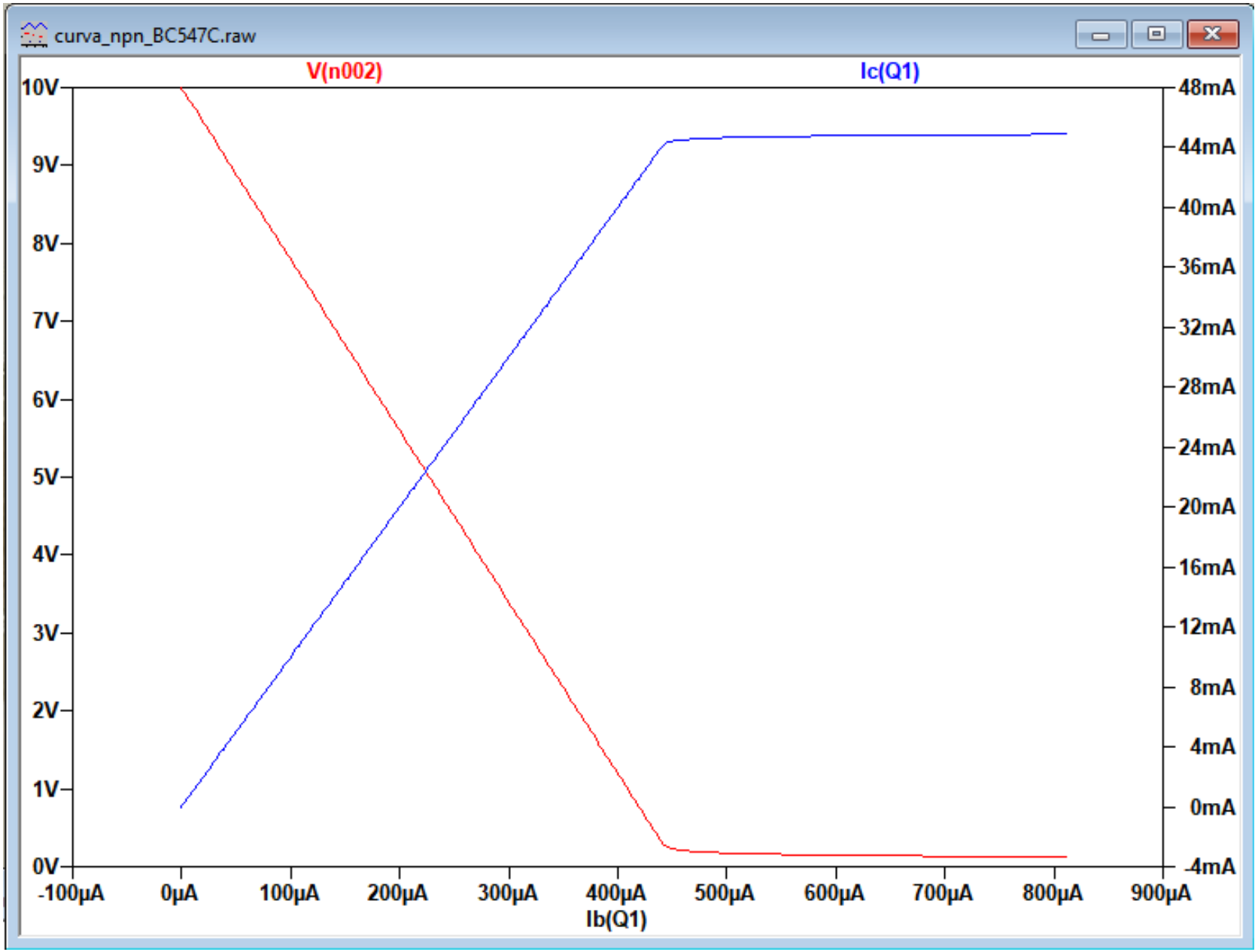
curva_npn_BC547C.raw
V(n002)
Ic(Q1)
10V
9V
8V
7V
6V
5V
4V
3V
2V
1V
0V
48mA
44mA
40mA
36mA
32mA
28mA
24mA
20mA
16mA
12mA
8mA
4mA
0mA
-4mA
-100µA
0µA
100µA
200µA
300µA
400µA
500µA
600µA
700µA
800µA
900µA
Ib(Q1)

Exemplo LTspice: Transistor BJT NPN BC557C

Plotar: Vec x Ib e Iec x Ib com Va = 0 a 9V

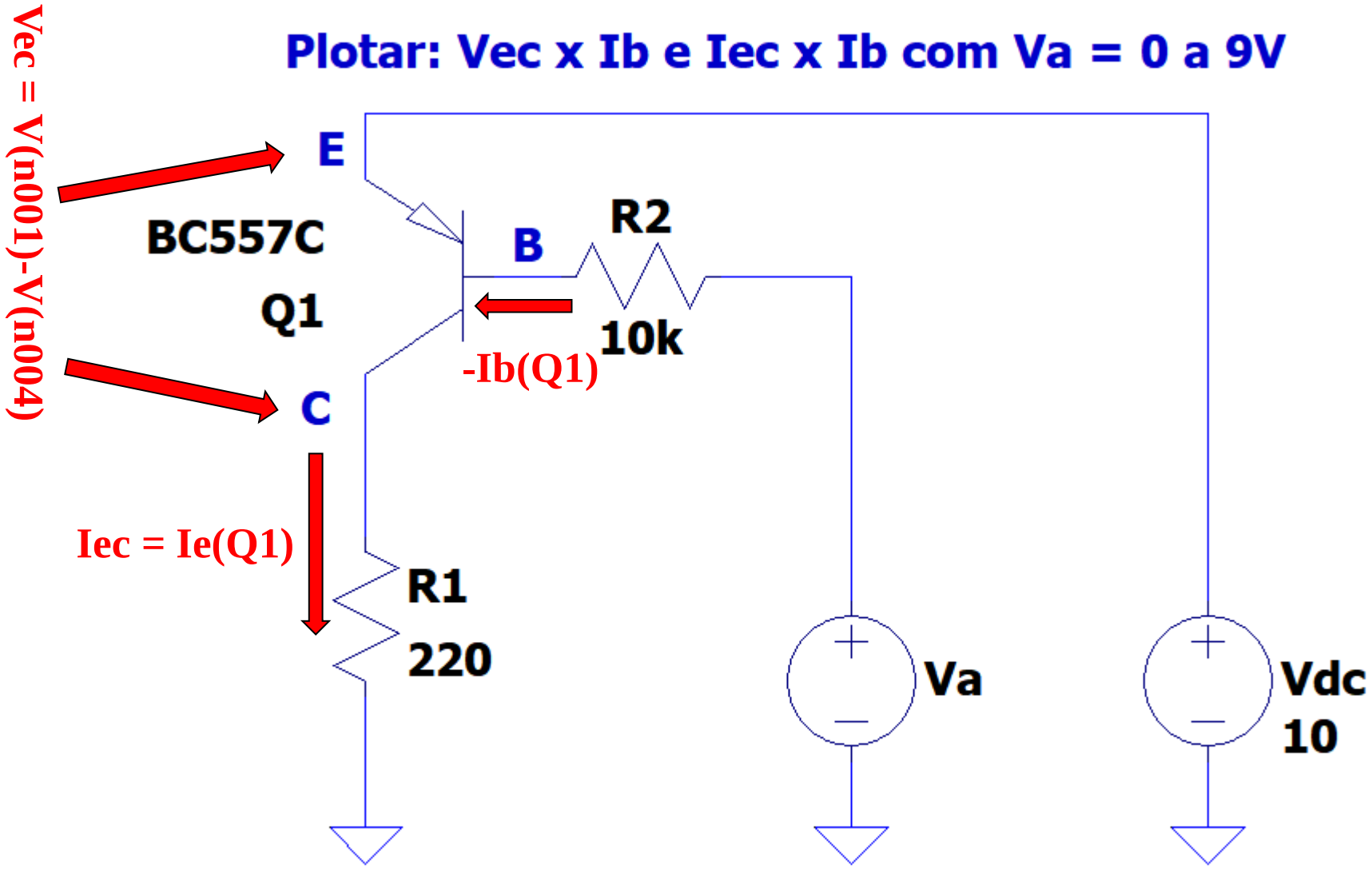

.dc Va 0 9 0.01

curva_pnp_BC557C.asc

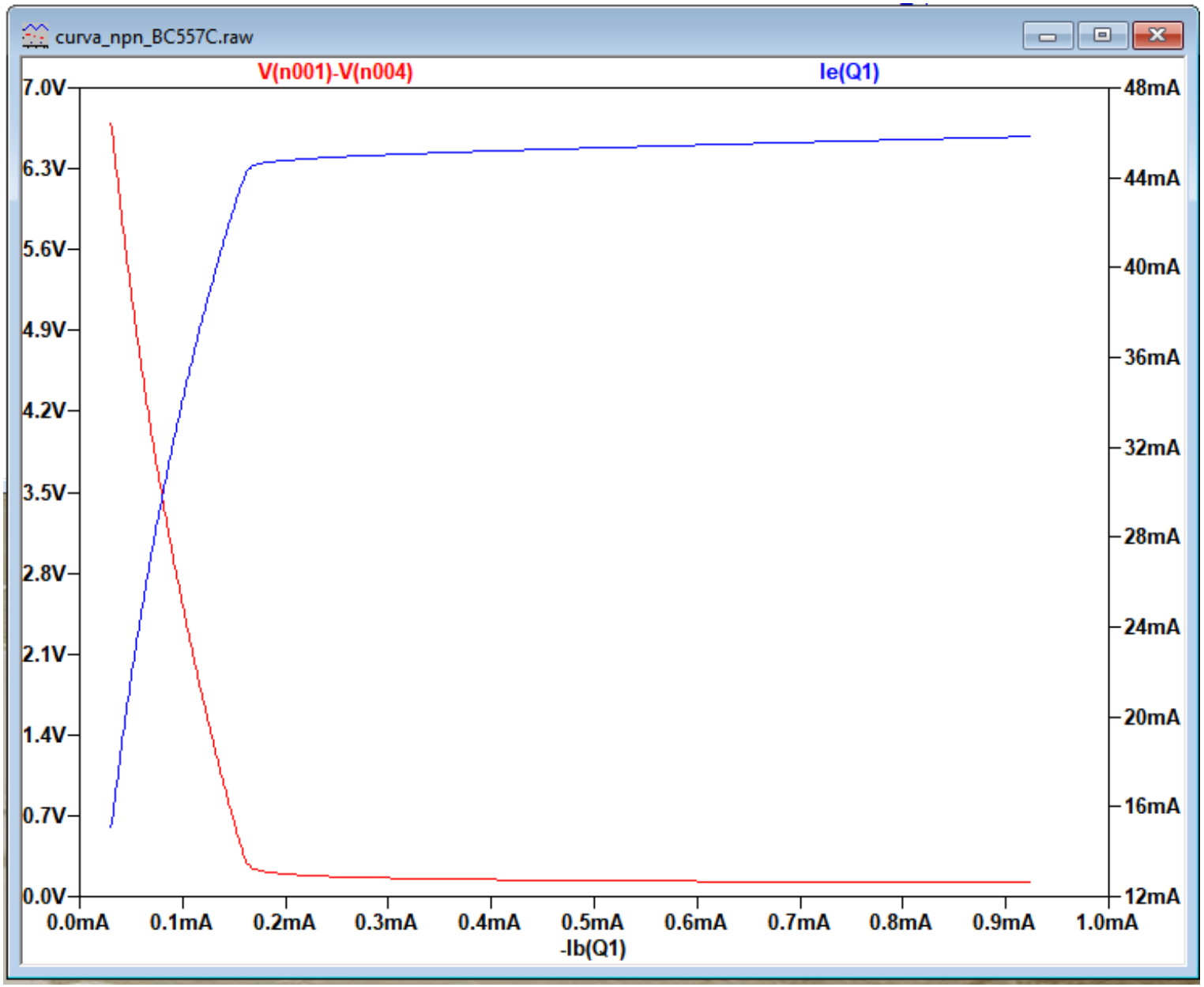
curva_npn_BC557C.raw
V(n001)-V(n004)
Ie(Q1)
7.0V
6.3V
5.6V
4.9V
4.2V
3.5V
2.8V
2.1V
1.4V
0.7V
0.0V
48mA
44mA
40mA
36mA
32mA
28mA
24mA
20mA
16mA
12mA
0.0mA
0.1mA
0.2mA
0.3mA
0.4mA
0.5mA
0.6mA
0.7mA
0.8mA
0.9mA
1.0mA
-Ib(Q1)

Exemplo LTspice: Transistor BJT NPN BC547C

Gráfico Paramétrico: Ice x Vce para Vdc(Base) = 1.0 volt

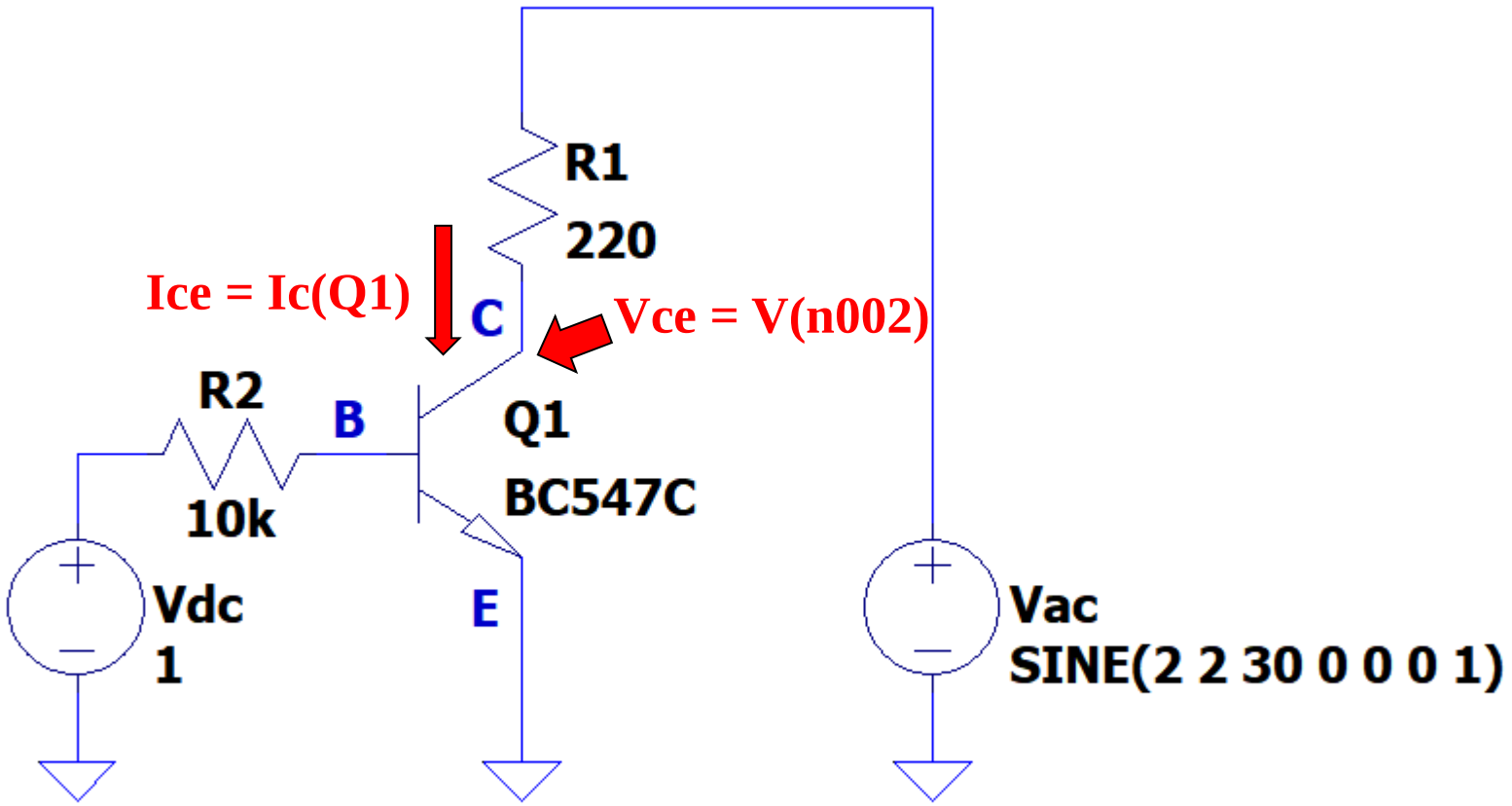

.tran 0 33.333m 0 1e-6

XY_npn_BC547C.asc

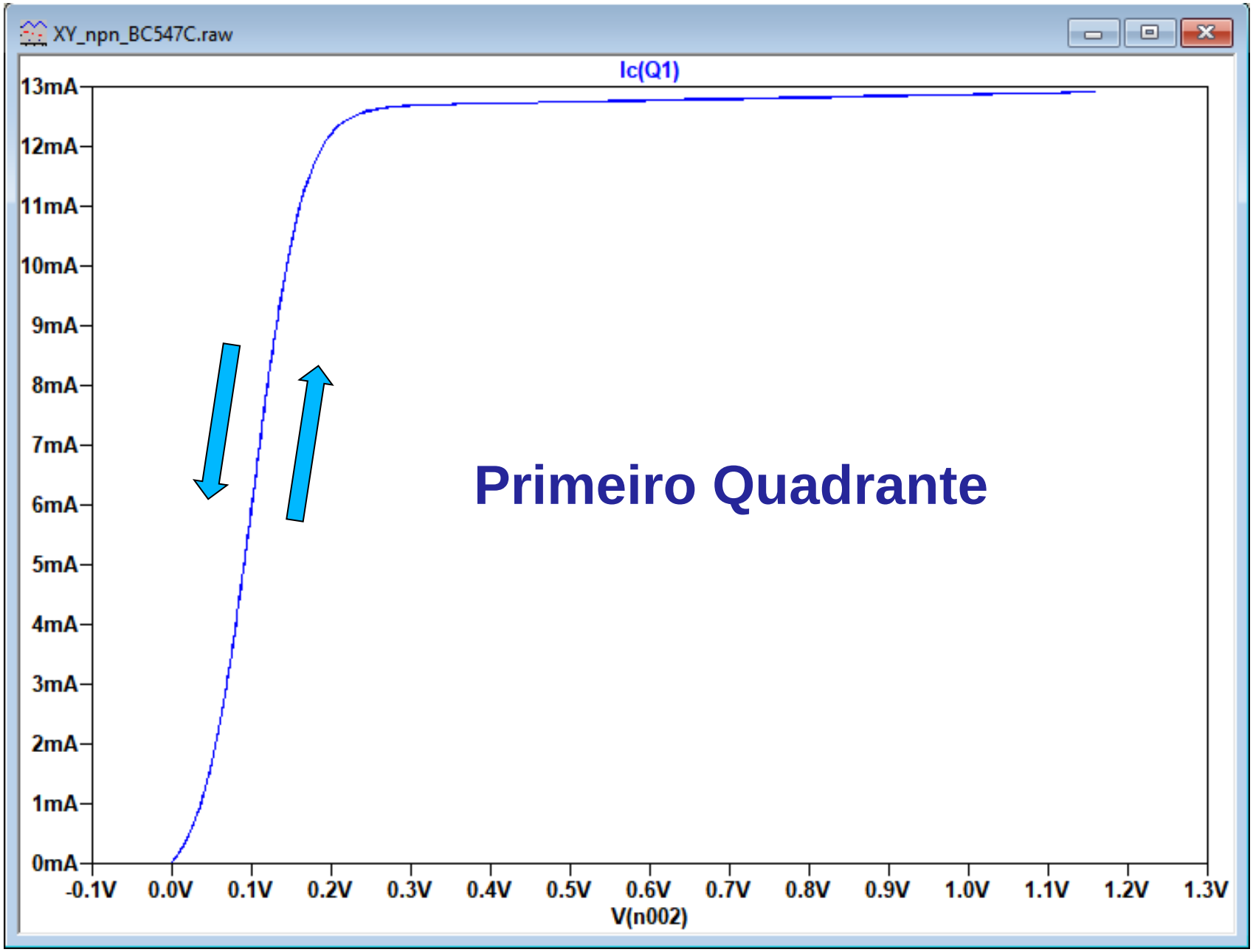
XY_npn_BC547C.raw
Ic(Q1)
13mA
12mA
11mA
10mA
9mA
8mA
7mA
6mA
5mA
4mA
3mA
2mA
1mA
0mA
-0.1V
0.0V
0.1V
0.2V
0.3V
0.4V
0.5V
0.6V
0.7V
0.8V
0.9V
1.0V
1.1V
1.2V
1.3V
V(n002)
Primeiro Quadrante