Prática de Física dos Dispositivos Eletrônicos

FGA0100

Laboratório-9

LED e Fotodiodo

01/2022

FGA **Universidade de Brasília**

LED - *Light Emitting Diode*

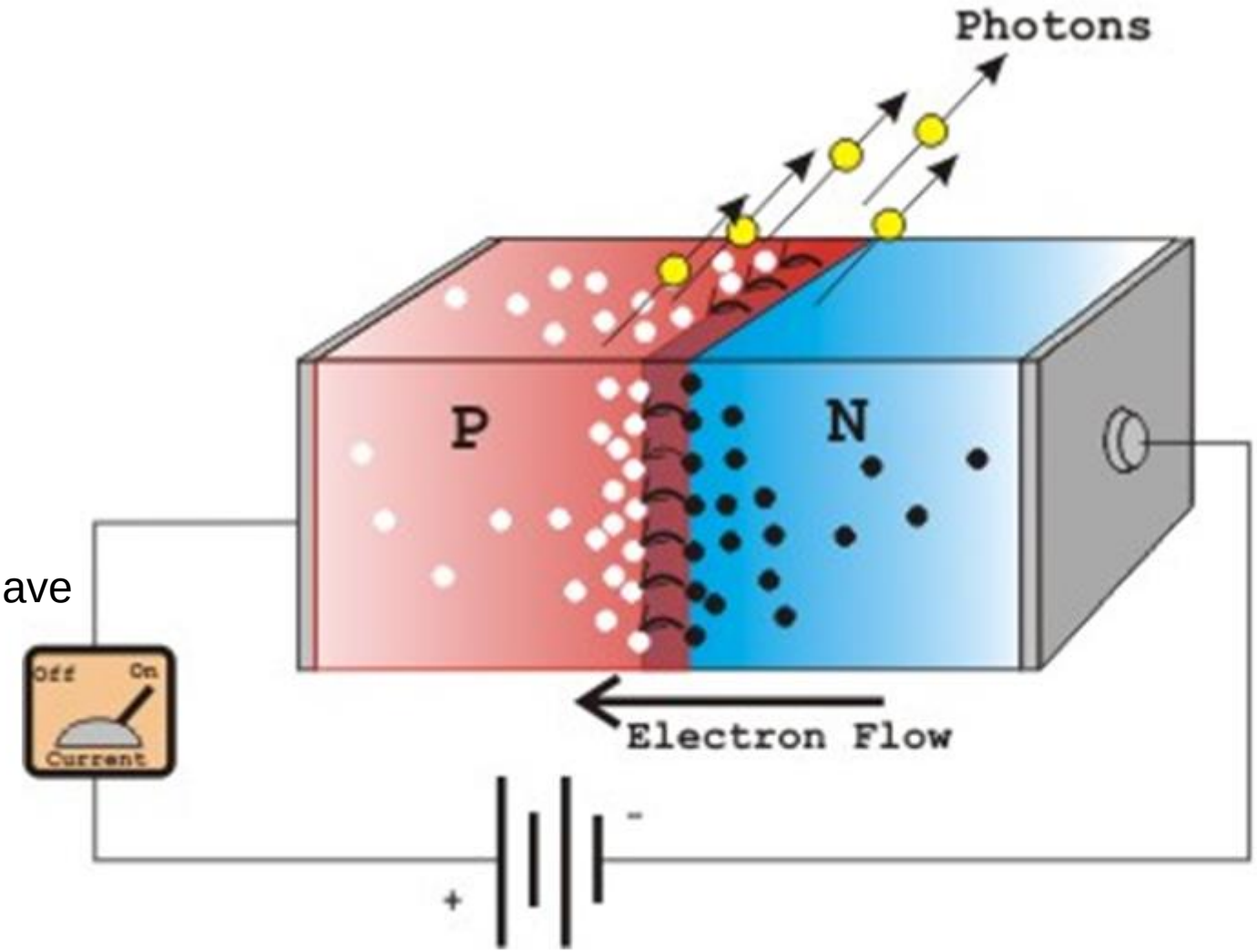

LED - *Light Emitting Diode*

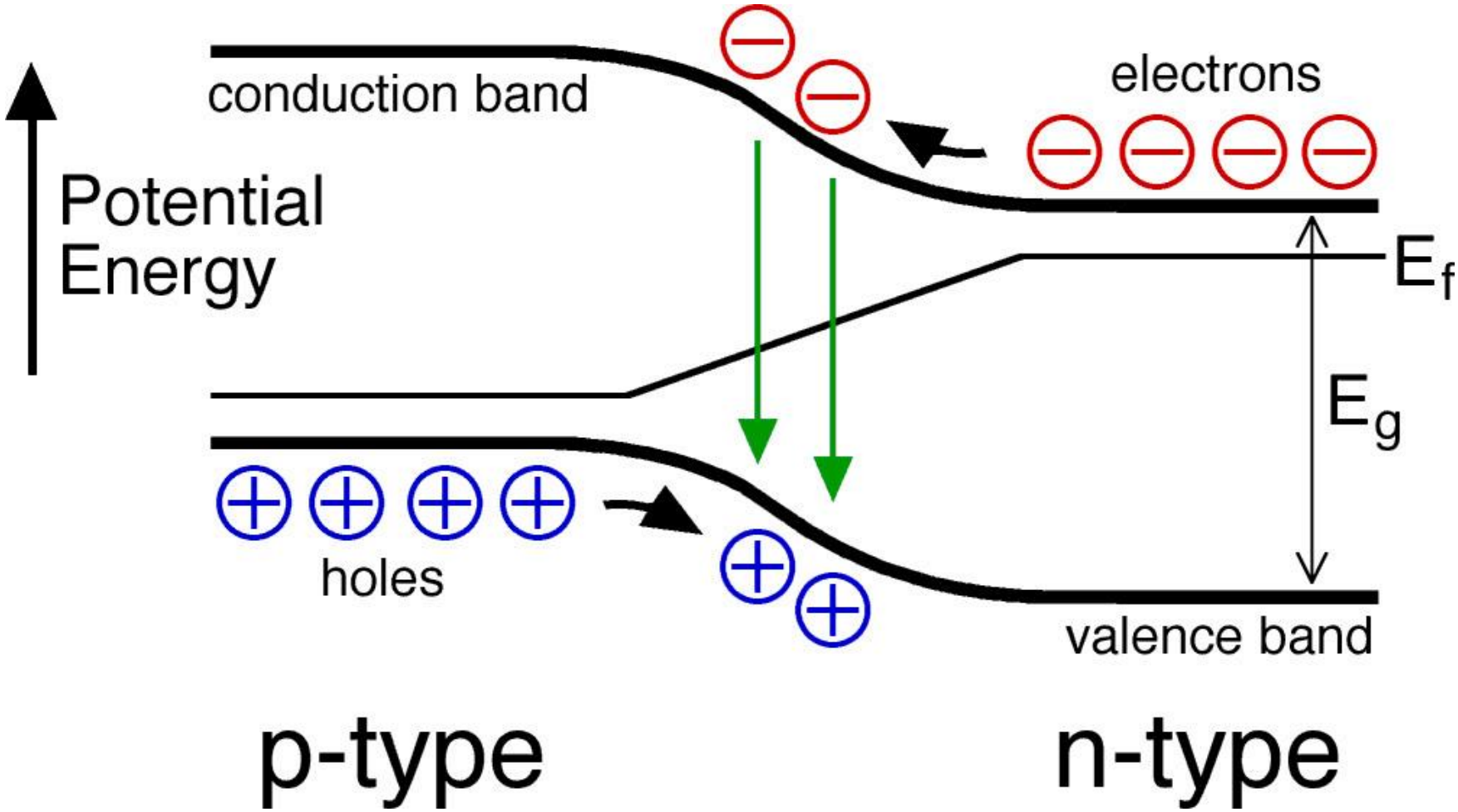

LED - *Light Emitting Diode*

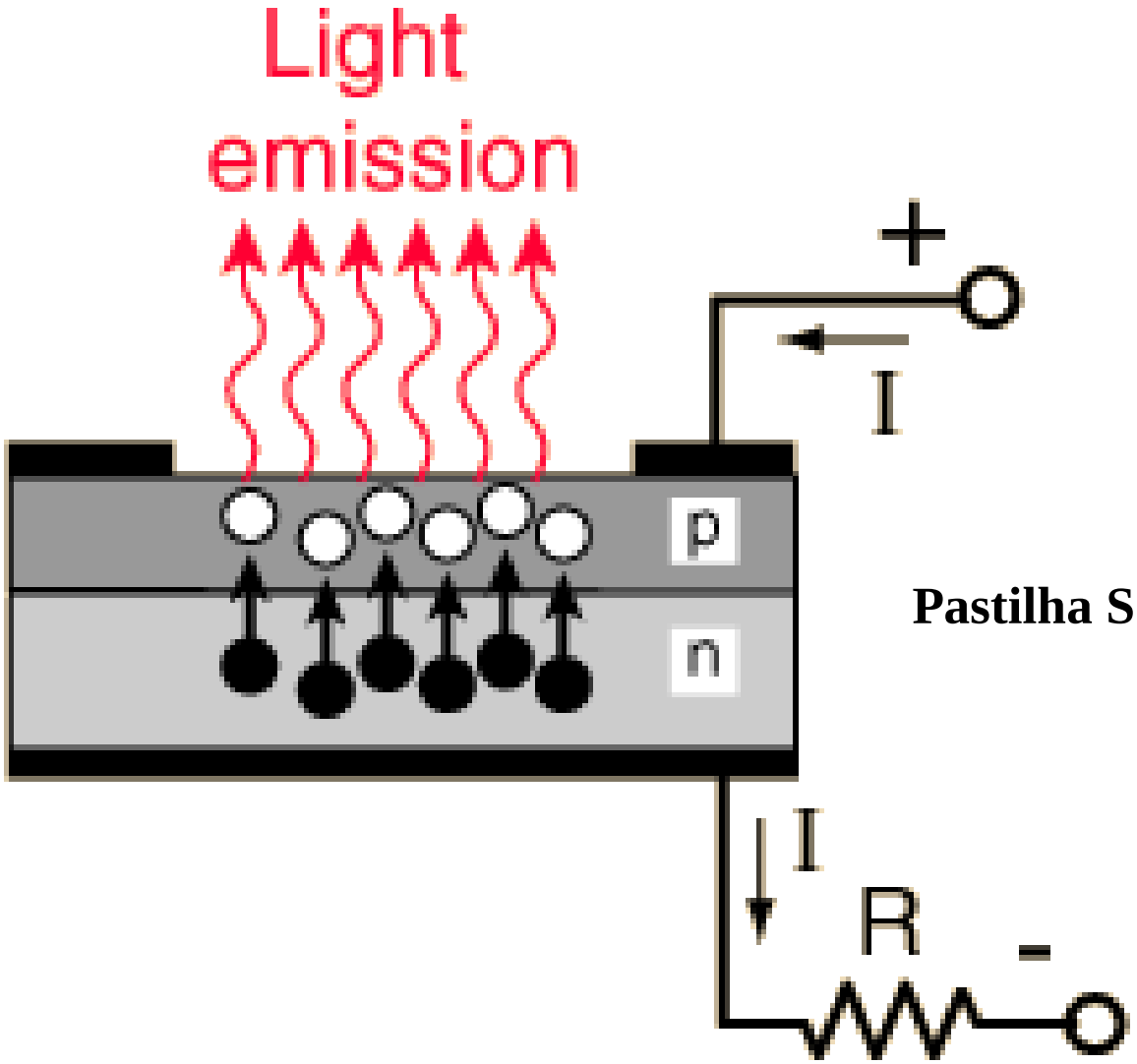

Pastilha Semicondutora

Tecnologia de Fabricação Planar

LED - *Light Emitting Diode*

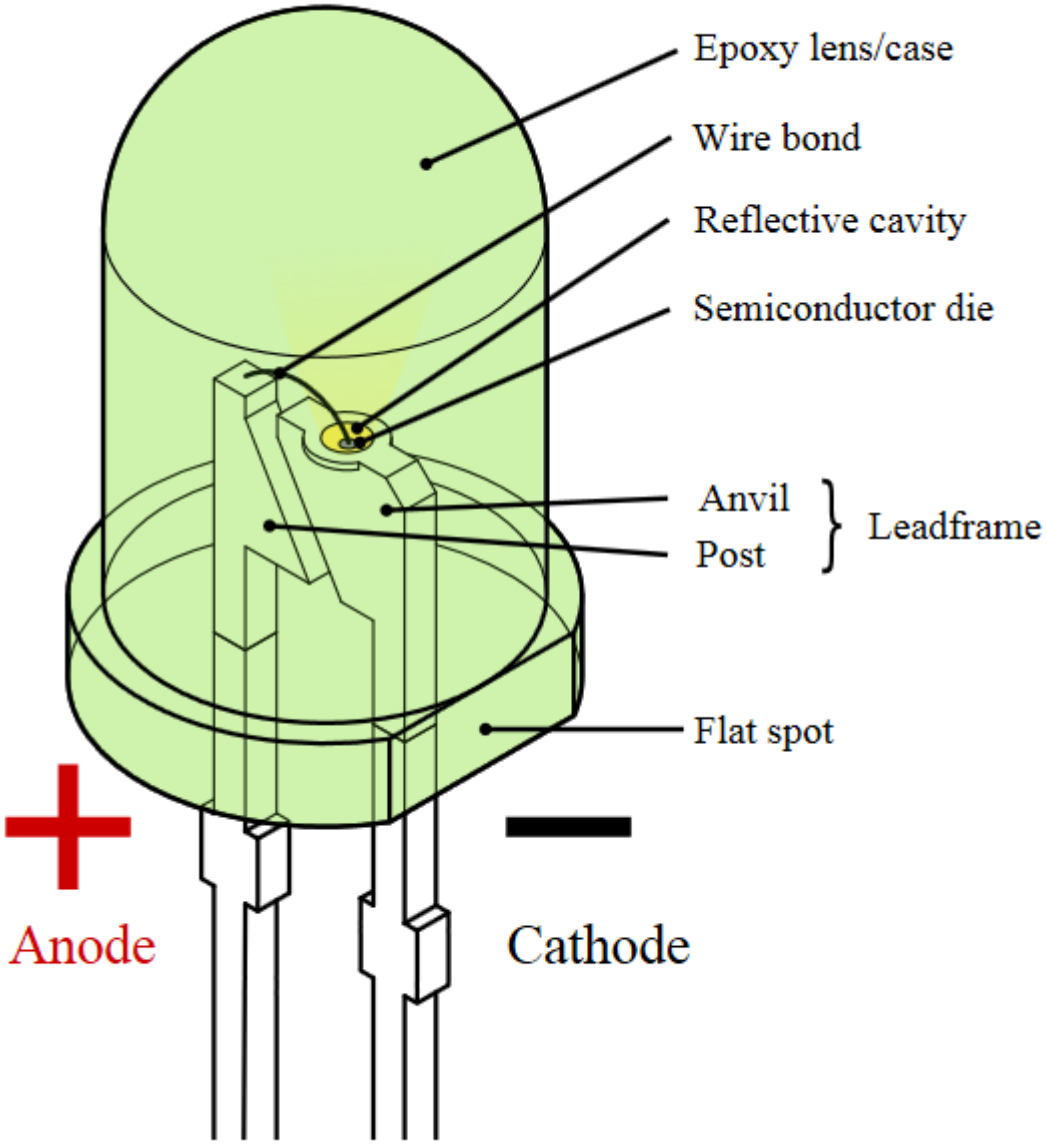

LED de Heteroestrutura (Maior Eficiência)

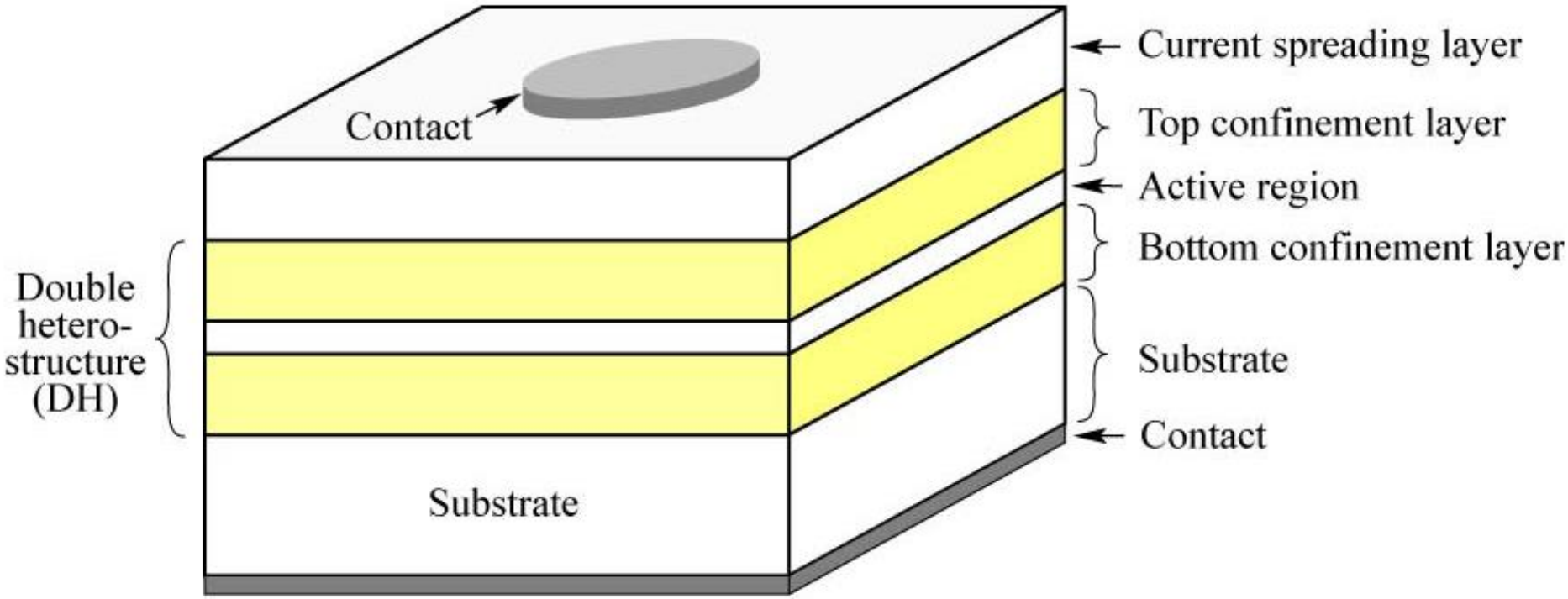

Fig. 7.1. Illustration of a double heterostructure consisting of a bulk or quantum well active region and two confinement layers. The *confinement* layers are frequently called *cladding* layers.

E. F. Schubert
Light-Emitting Diodes (Cambridge Univ. Press)
www.LightEmittingDiodes.org

https://www.ecse.rpi.edu/~schubert/Light-Emitting-Diodes-dot-org/

Comparação de LEDs
Diagrama de Bandas de Energia

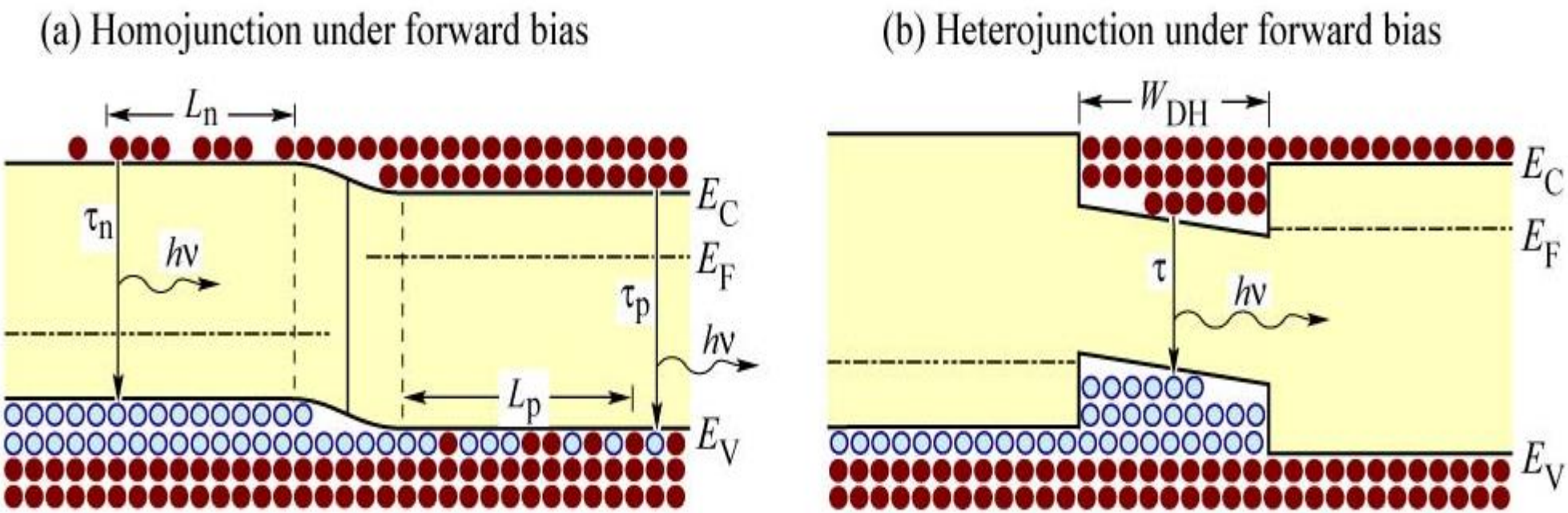

Fig. 7.2. Free carrier distribution in (a) a homojunction and (b) a heterojunction under forward bias conditions. In homojunctions, carriers are distributed over the diffusion length. In heterojunctions, carriers are confined to the well region.

E. F. Schubert
Light-Emitting Diodes (Cambridge Univ. Press)
www.LightEmittingDiodes.org

https://www.ecse.rpi.edu/~schubert/Light-Emitting-Diodes-dot-org/

Tipos de LEDs

Color	Wavelength [nm]	Voltage drop [ΔV]	Semiconductor material
Infrared	$\lambda > 760$	$\Delta V < 1.63$	Gallium arsenide (GaAs) Aluminium gallium arsenide (AlGaAs)
Red	$610 < \lambda < 760$	$1.63 < \Delta V < 2.03$	Aluminium gallium arsenide (AlGaAs) Gallium arsenide phosphide (GaAsP) Aluminium gallium indium phosphide (AlGaInP) Gallium(III) phosphide (GaP)
Orange	$590 < \lambda < 610$	$2.03 < \Delta V < 2.10$	Gallium arsenide phosphide (GaAsP) Aluminium gallium indium phosphide (AlGaInP) Gallium(III) phosphide (GaP)
Yellow	$570 < \lambda < 590$	$2.10 < \Delta V < 2.18$	Gallium arsenide phosphide (GaAsP) Aluminium gallium indium phosphide (AlGaInP) Gallium(III) phosphide (GaP)
Green	$500 < \lambda < 570$	$1.9^{[63]} < \Delta V < 4.0$	**Traditional green:** Gallium(III) phosphide (GaP) Aluminium gallium indium phosphide (AlGaInP) Aluminium gallium phosphide (AlGaP) **Pure green:** Indium gallium nitride (InGaN) / Gallium(III) nitride (GaN)

Blue	$450 < \lambda < 500$	$2.48 < \Delta V < 3.7$	Zinc selenide (ZnSe) Indium gallium nitride (InGaN) Silicon carbide (SiC) as substrate Silicon (Si) as substrate—under development
Violet	$400 < \lambda < 450$	$2.76 < \Delta V < 4.0$	Indium gallium nitride (InGaN)
Purple	multiple types	$2.48 < \Delta V < 3.7$	Dual blue/red LEDs, blue with red phosphor, or white with purple plastic
Ultraviolet	$\lambda < 400$	$3.1 < \Delta V < 4.4$	Diamond (235 nm)[64] Boron nitride (215 nm)[65][66] Aluminium nitride (AlN) (210 nm)[67] Aluminium gallium nitride (AlGaN) Aluminium gallium indium nitride (AlGaInN)—down to 210 nm[68]
Pink	multiple types	$\Delta V \sim 3.3$[69]	Blue with one or two phosphor layers: yellow with red, orange or pink phosphor added afterwards, or white with pink pigment or dye.[70]
White	Broad spectrum	$\Delta V = 3.5$	Blue/UV diode with yellow phosphor

https://en.wikipedia.org/wiki/Light-emitting_diode_physics#Materials

https://en.wikipedia.org/wiki/Phosphor

Potência Radiante e Eficiência vs. Corrente em LEDs

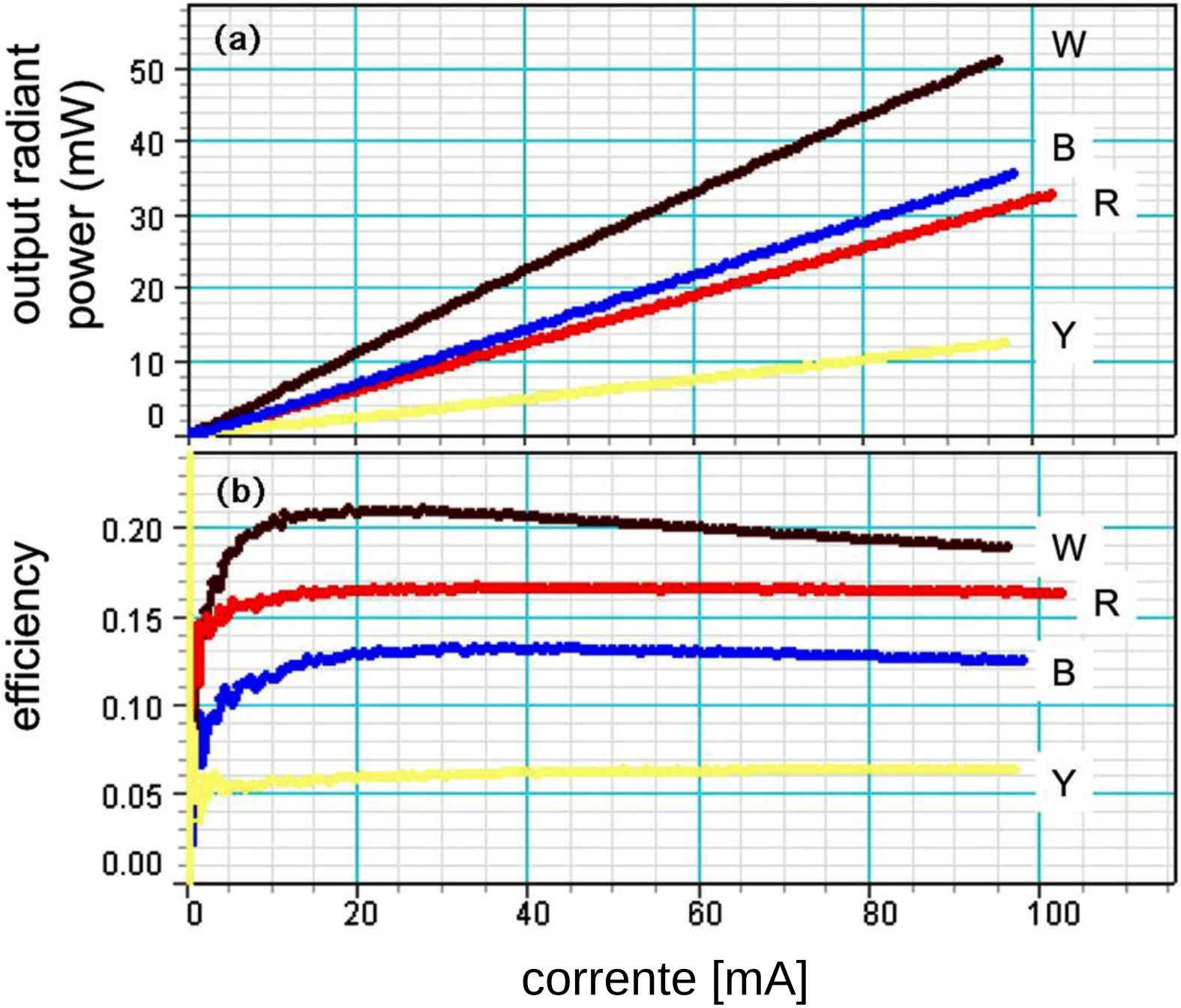

Potência Radiante por Comprimento de Onda em LEDs

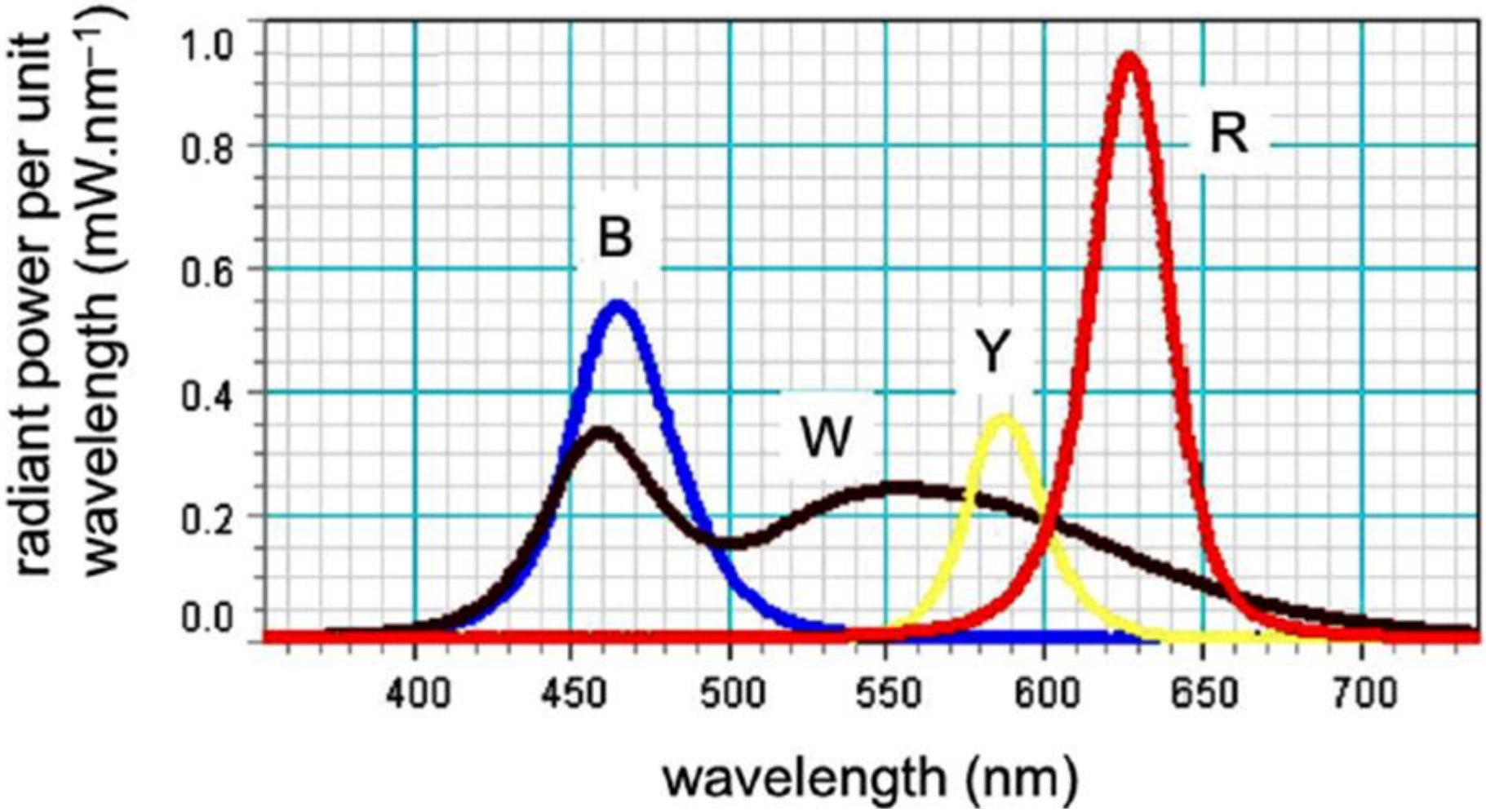

Poder de Iluminação por Comprimento de Onda em LEDs

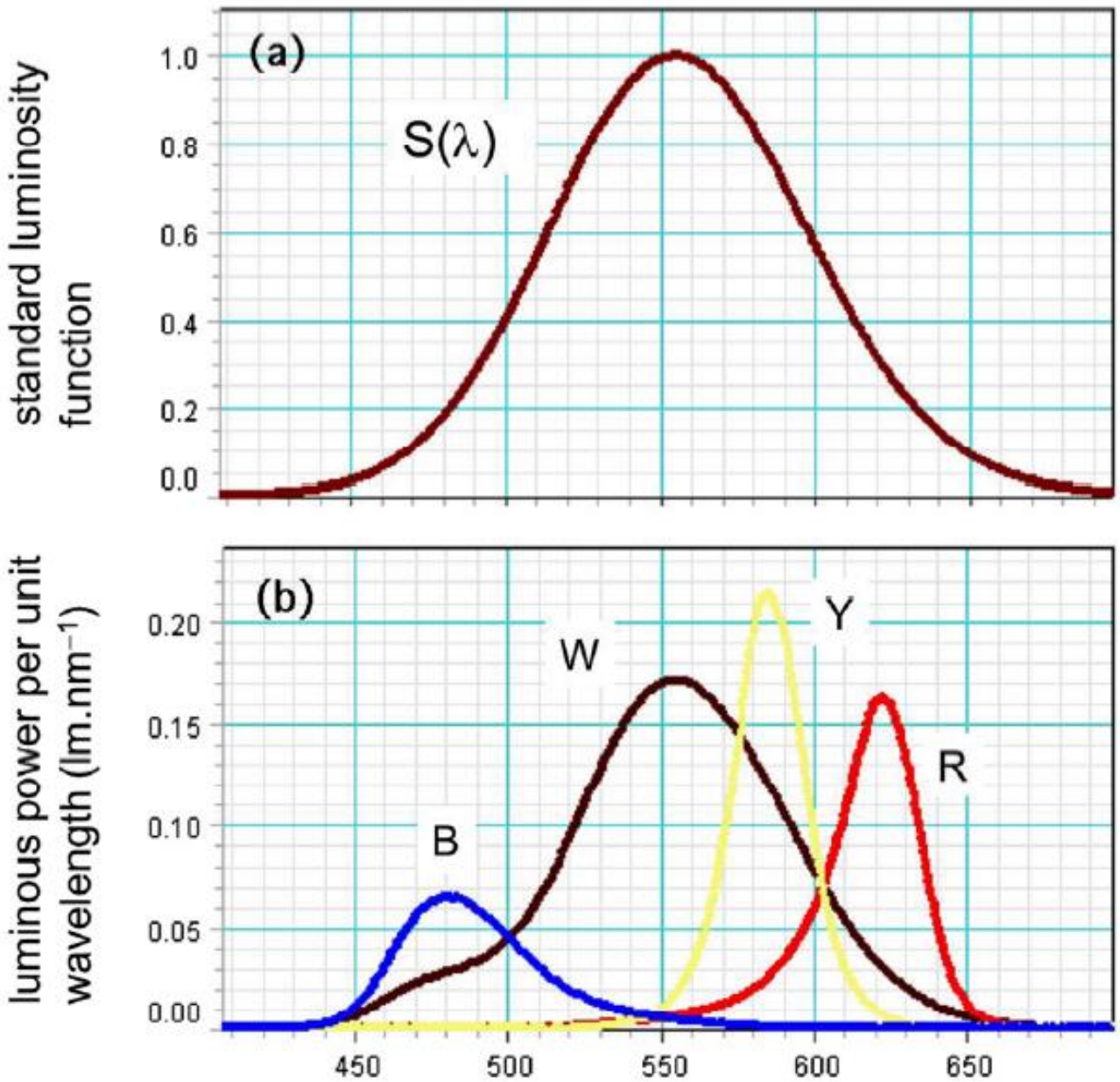

comprimento de onda [nm]

Luminescência

Fluorescência e Fosforescência

Lâmpadas Fluorescentes
(Nenhum Afterglow)

Jaleco Fosforescente
(Afterglow dura muito tempo)

https://en.wikipedia.org/wiki/Phosphorescence
https://en.wikipedia.org/wiki/Fluorescence
https://en.wikipedia.org/wiki/Phosphor

Iluminação com LED Branco

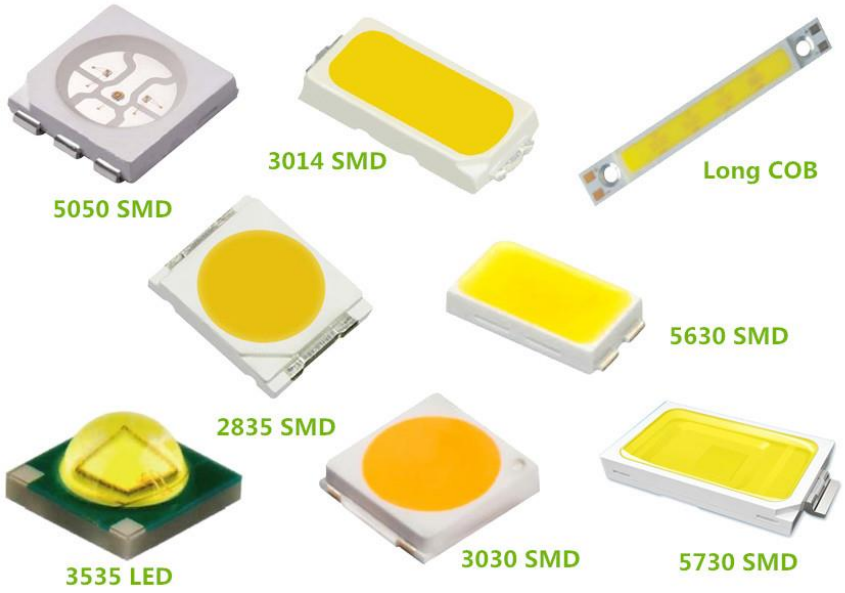

LED InGaN (Azul)

Filme de YAG:Ce3+
(Yttrium Aluminium Garnet)
$Y_3Al_5O_{12}:Ce^{3+}$

Obs: *garnet* = granada

COMPARATIVO DE TECNOLOGIAS

FAI

EQUIVALÊNCIA			
VIDA ÚTIL	50000 Hs	8000 Hs	1200 Hs
CONSUMO	5 W	10 W	50 W
CUSTO EM 6 MESES (KW SP)	R$ 5,58	R$ 10,50	R$ 52,40
DURABILIDADE (ciclo 12hs)	10 anos	18 meses	3 meses
EMISSÃO DE CALOR	MUITO BAIXA	MÉDIA	MUITO ALTA
ECOLOGICA	não contem mercurio	contem mercúrio	não contem mercúrio

Fotodiodo

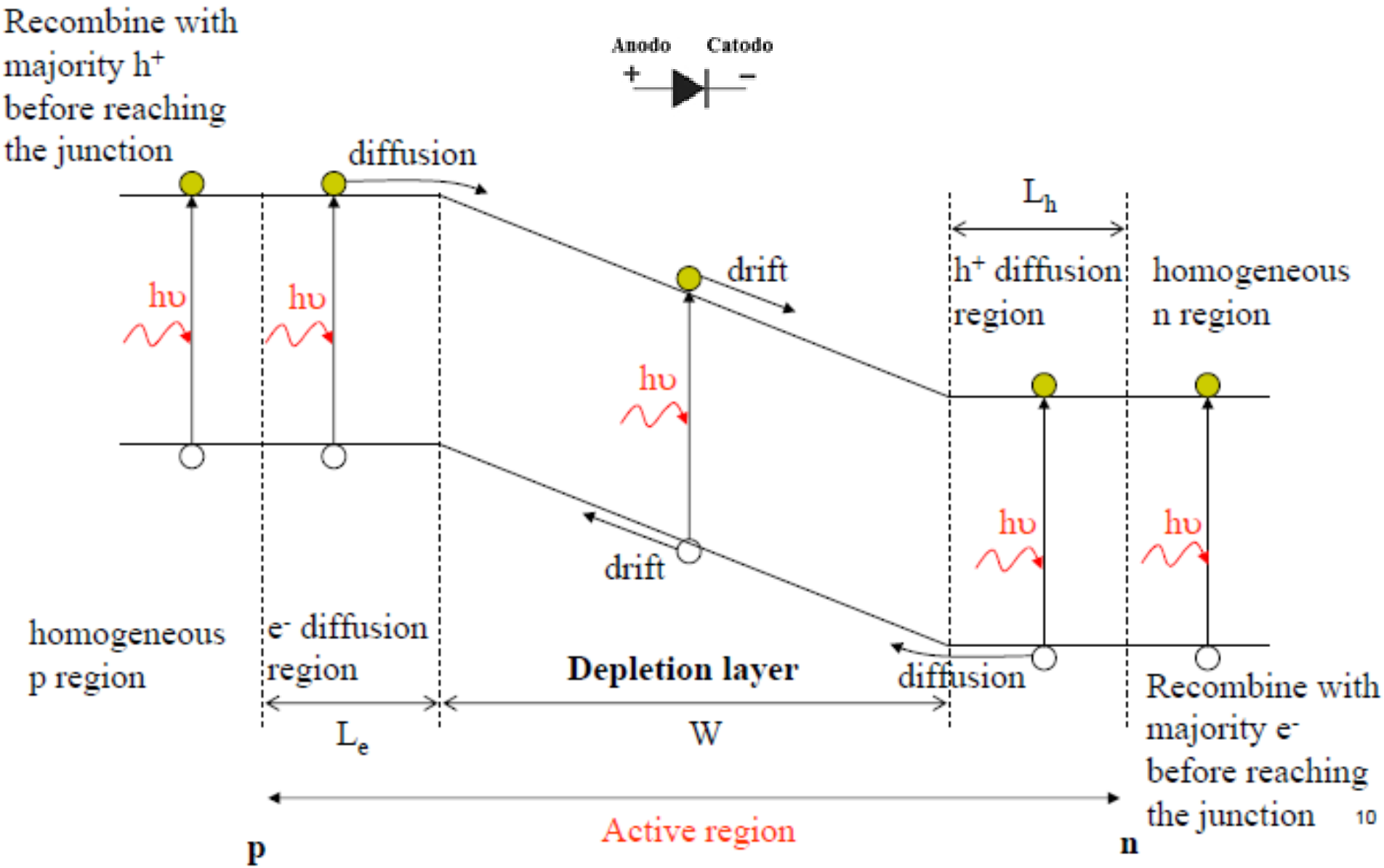
Recombine with majority h+ before reaching the junction
Anodo
Catodo
+
−
diffusion
Lh
drift
h+ diffusion region
homogeneous n region
hυ
hυ
hυ
hυ
hυ
drift
homogeneous p region
e- diffusion region
Depletion layer
diffusion
Recombine with majority e- before reaching the junction
Le
W
Active region
p
n

Optoisolador ou Optocoplador

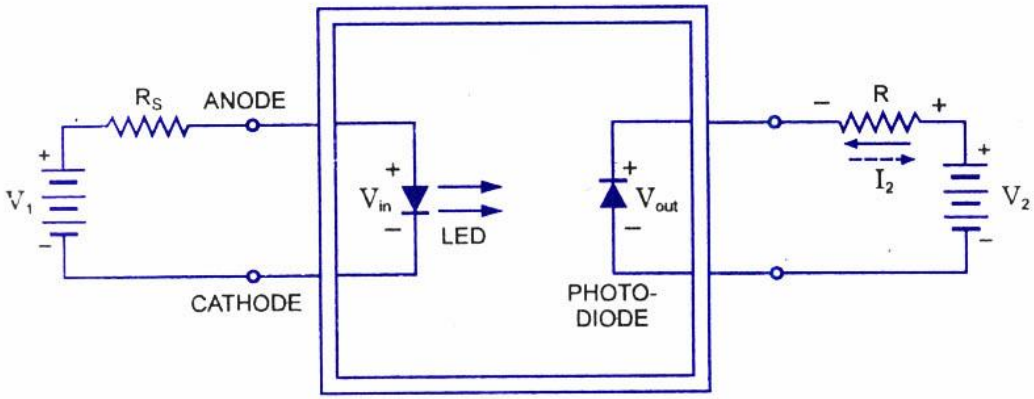

6N136

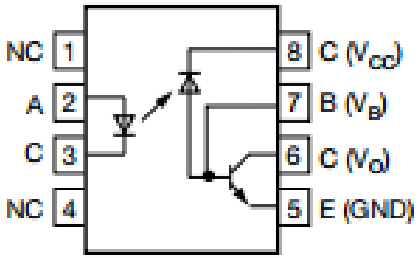

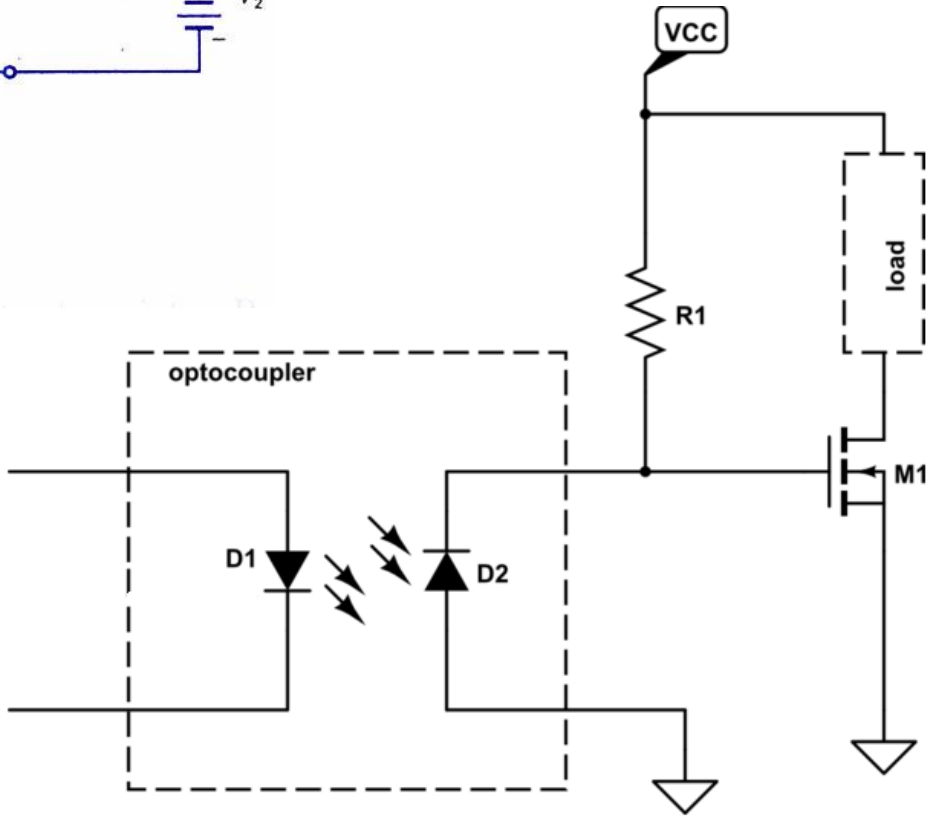

Fototransistor

Diodo
Modo
Fotocondutivo

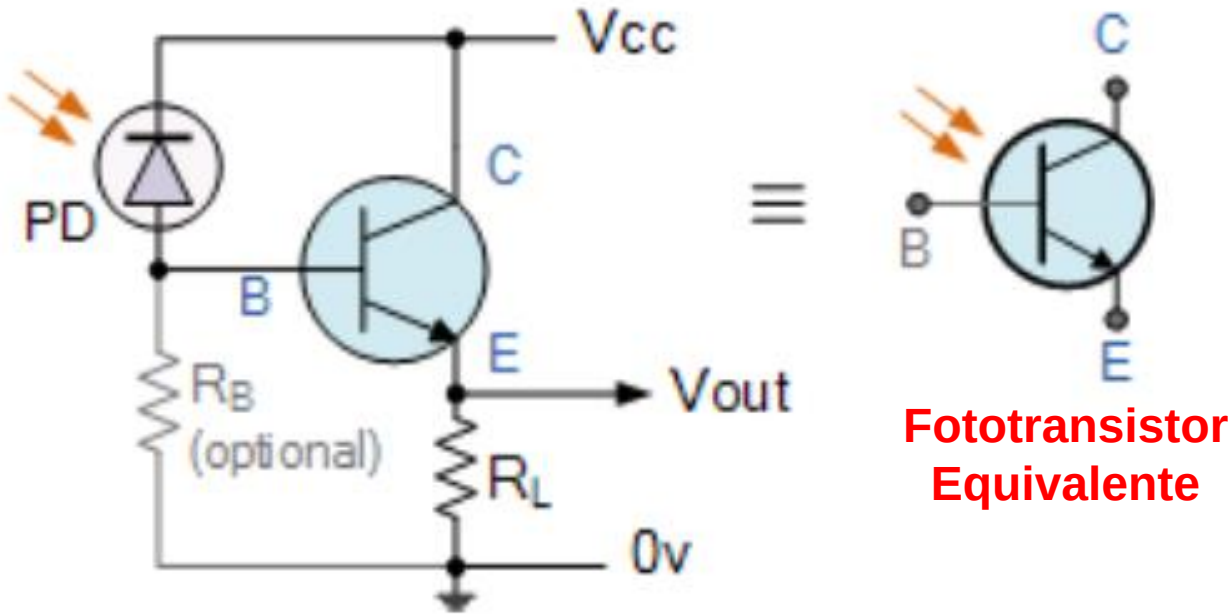

Fototransistor
Equivalente

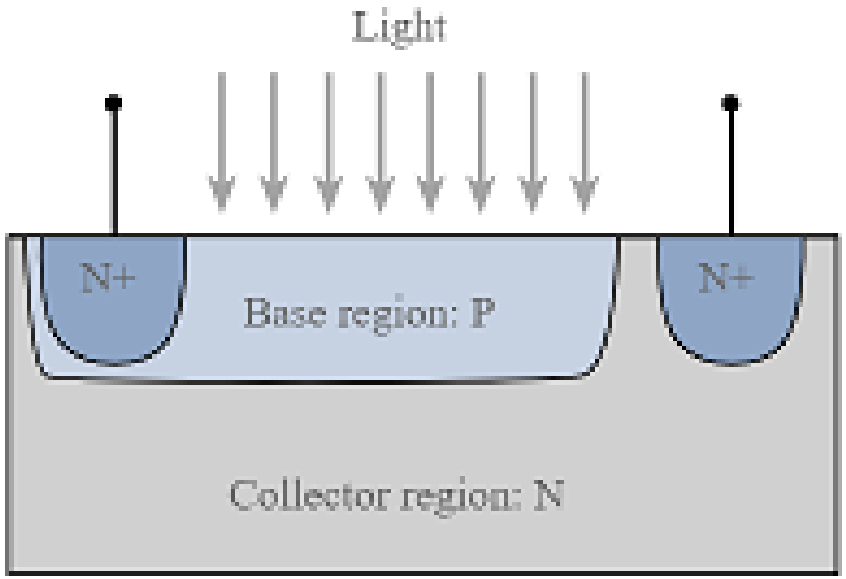

Fototransistor

Optoisolador ou Optocoplador (4N25)

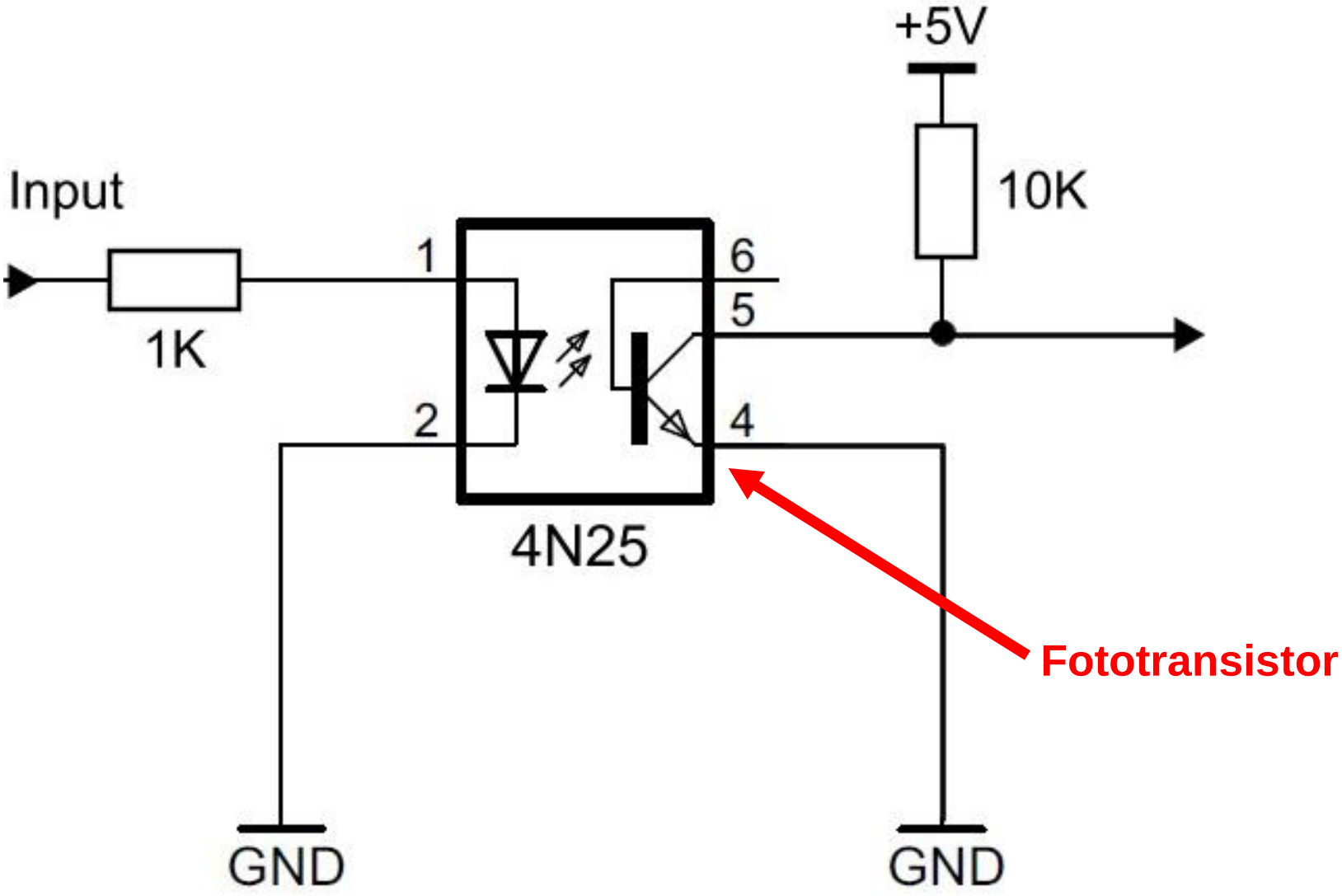

Célula Fotovoltaica

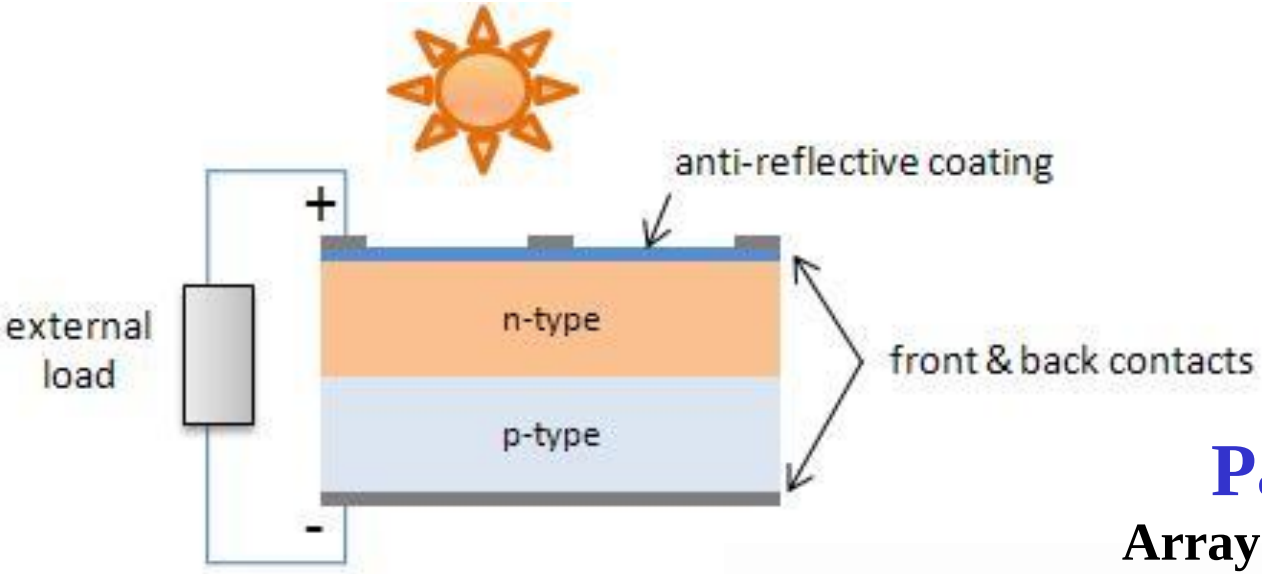

Painel Solar

Array de Células Solares

Fotodiodos: Curvas I vs. V

$$I_L = \frac{\eta\, e\, P_L \lambda}{hc} \qquad I = I_s\left(e^{eV/k_BT} - 1\right) - I_L$$

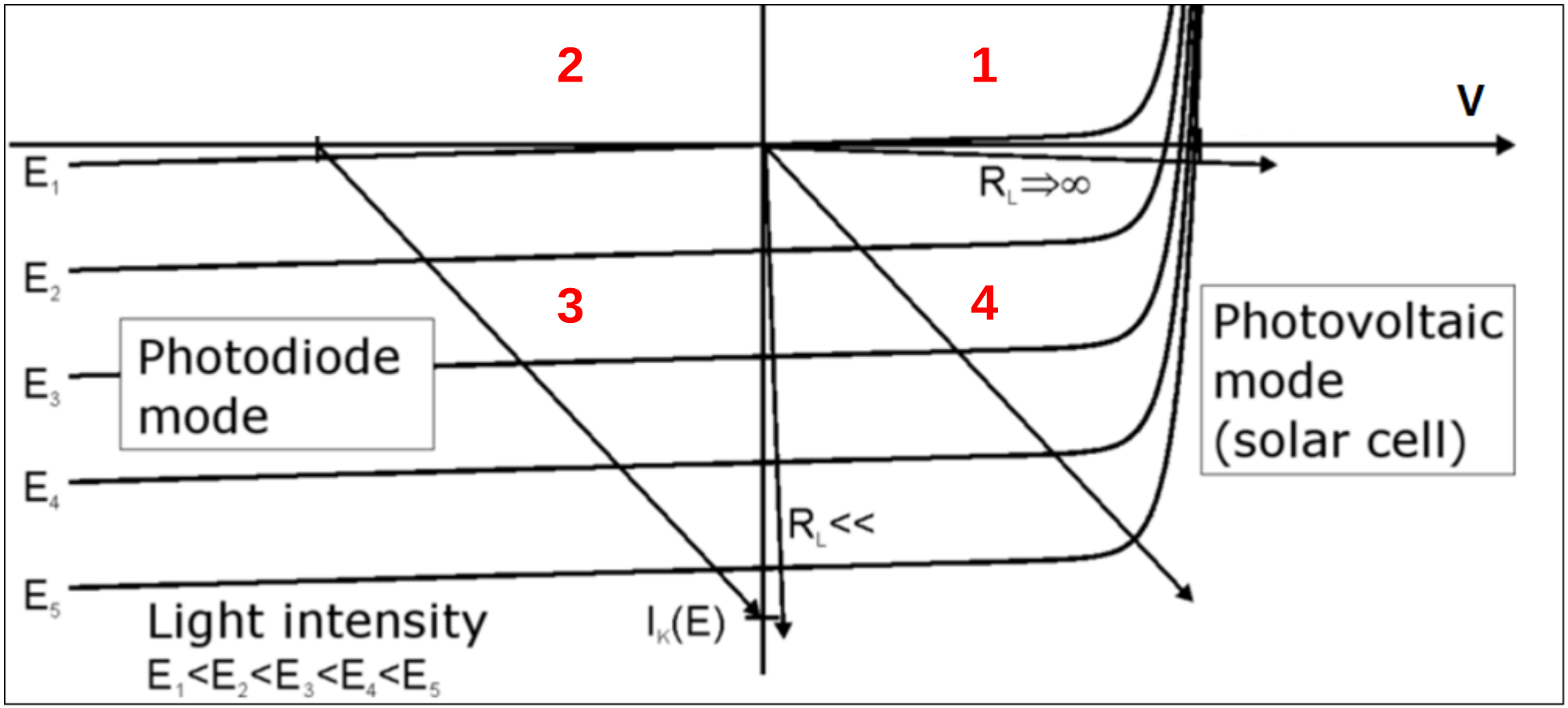

Montagens Experimentais

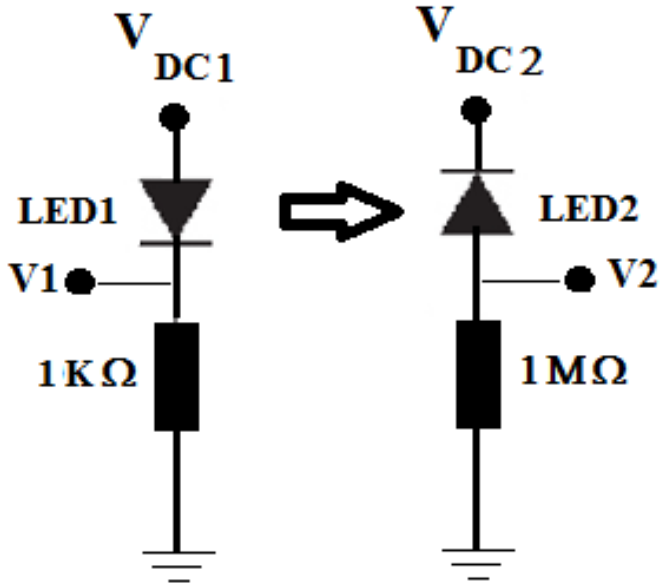

Figura-A

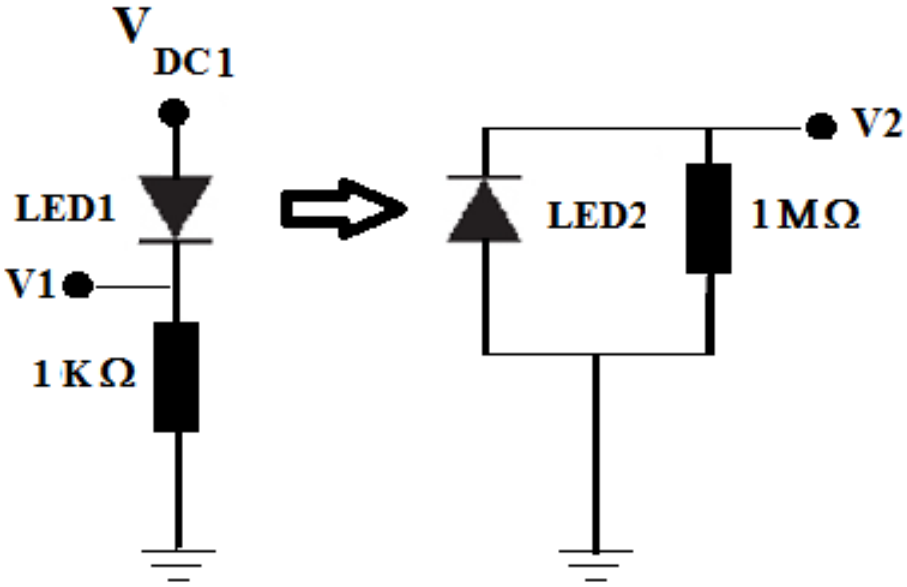

Figura-B

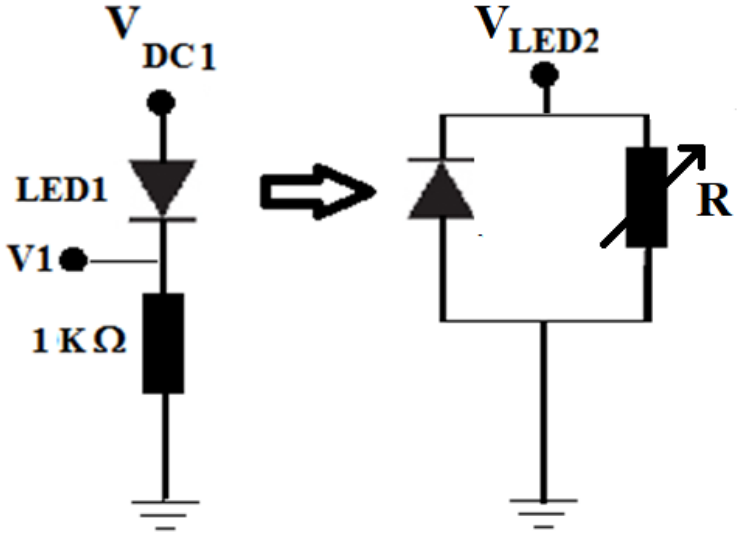

Figura-C

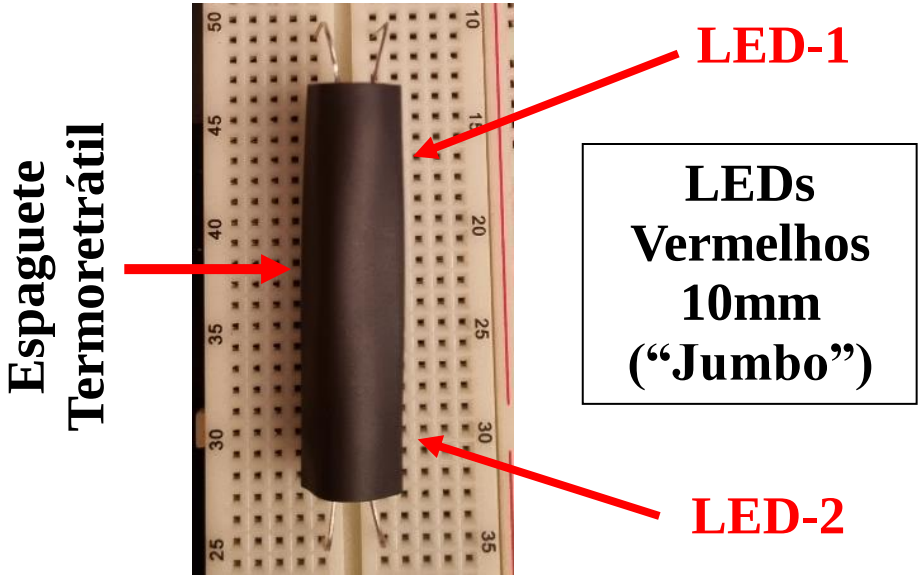

Parte-I (Figura-A)

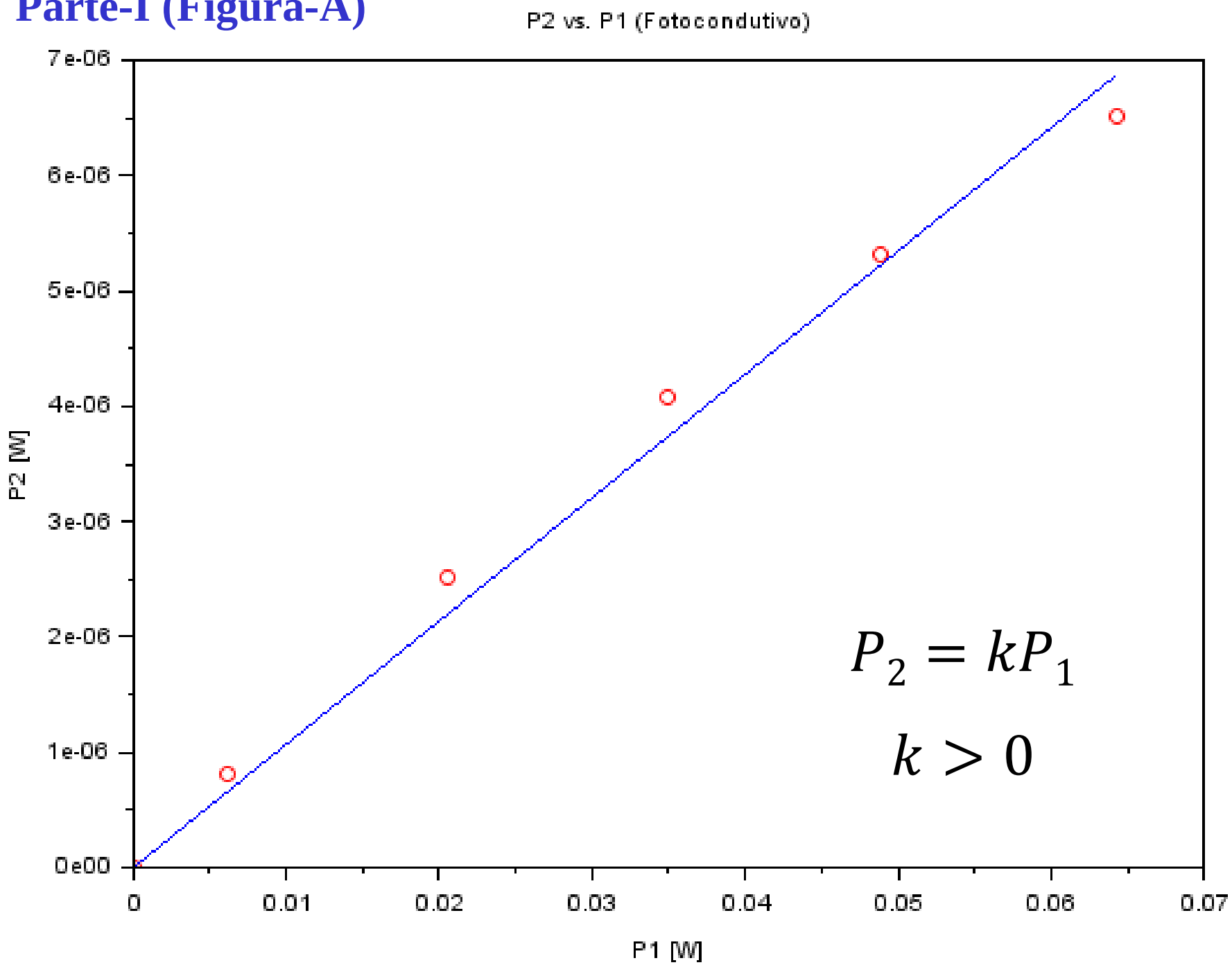

Programa SCILAB: Optoacoplador.sce

Parte-II (Figura-B)

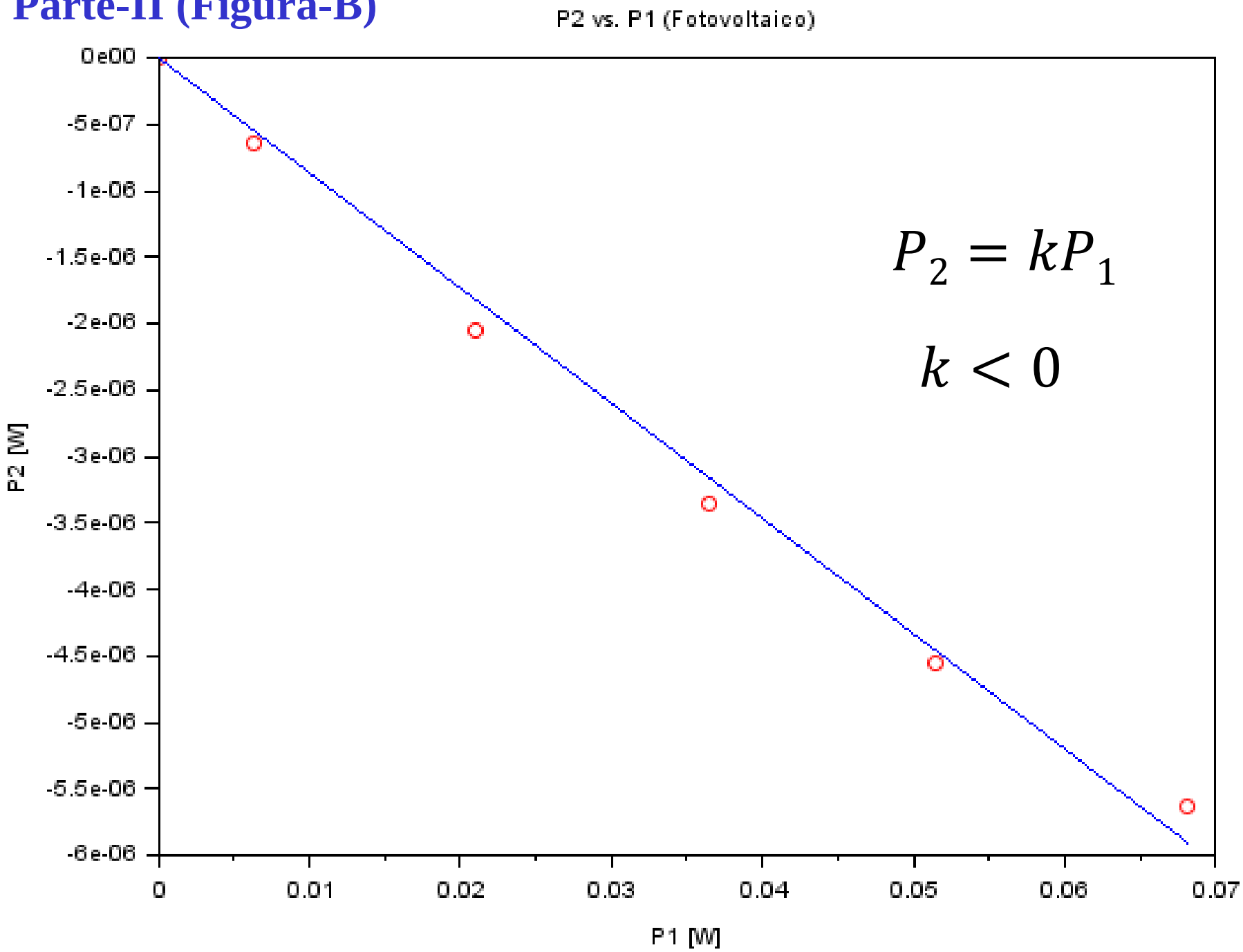

$$P_2 = kP_1$$

$$k < 0$$

Programa SCILAB: Optoacoplador.sce

Parte-III (Figura-C)

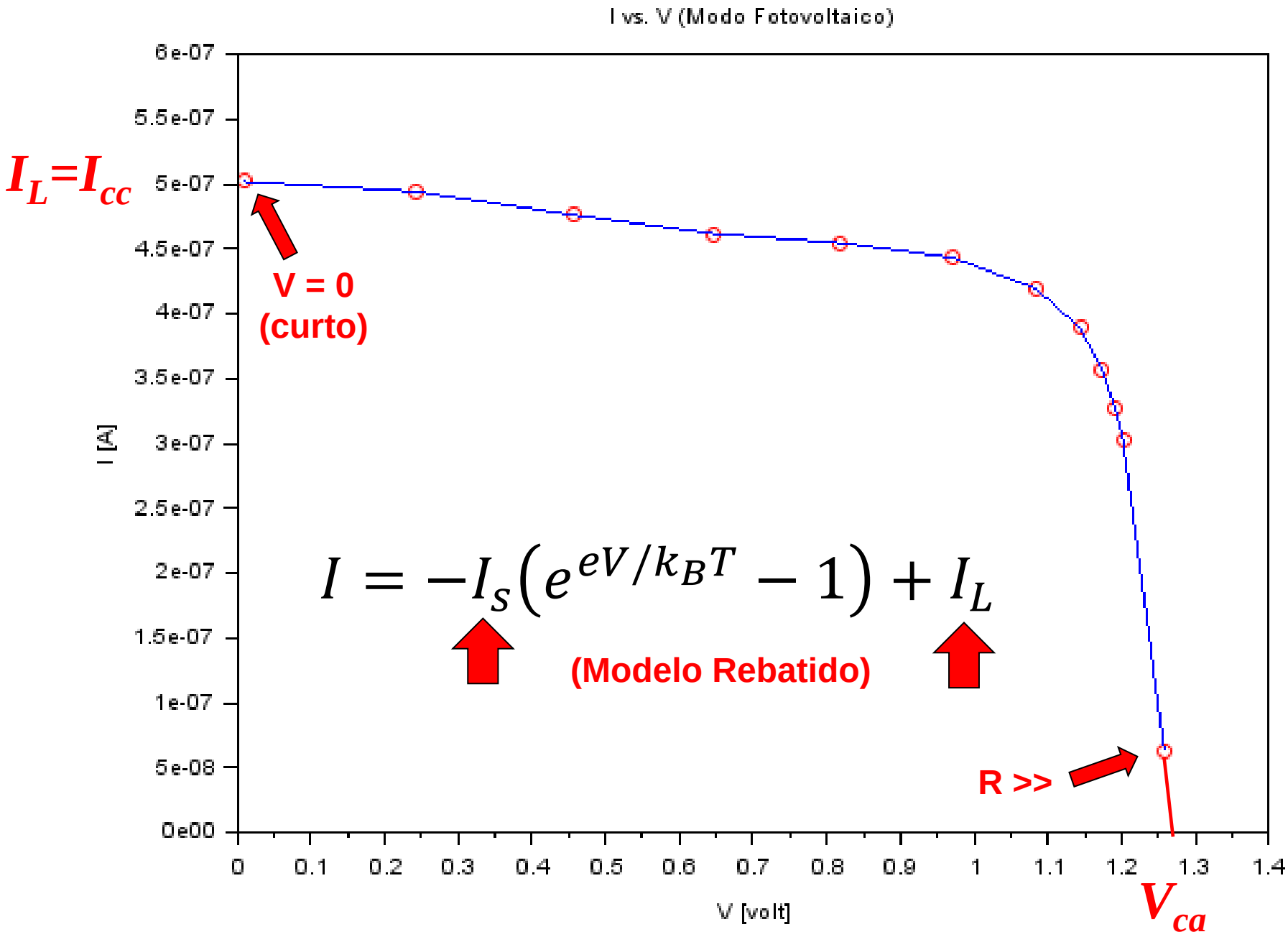

Programa SCILAB: Optoacoplador.sce

Cálculo da Constante de Planck com LEDs

Wave length λ [nm]	Frequency ν [10^{14}Hz]	Threshold Voltage V_s [V]	Energy E [10^{-19}J]	Planck's Constant h [10^{-34} Js]
430	6.98	2.50 ± 0.01	4.00	5.73
565	5.31	1.85 ± 0.01	3.51	6.61
590	5.08	1.70 ± 0.01	2.72	5.35
627	4.78	1.65 ± 0.01	2.64	5.52
700	4.29	1.73 ± 0.01	2.8	6.52
850	3.53	1.20 ± 0.01	1.87	5.29

Energia do Fóton: $$E = \frac{hc}{\lambda} \simeq eV_s$$

Constante de Planck: $$h \simeq \frac{eV_s\lambda}{c}$$

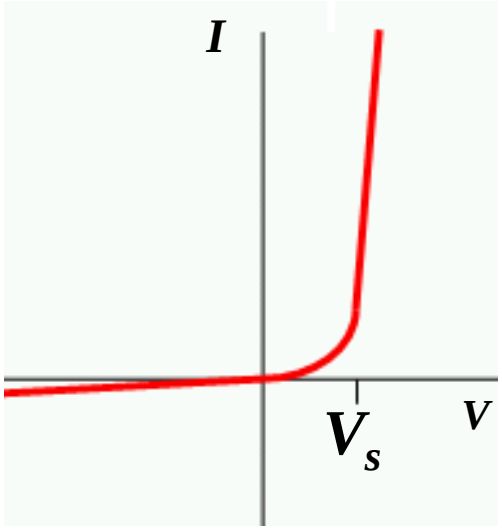

https://www.researchgate.net/publication/328821557_From_led_light_signboards_to_the_Planck%27s_constant

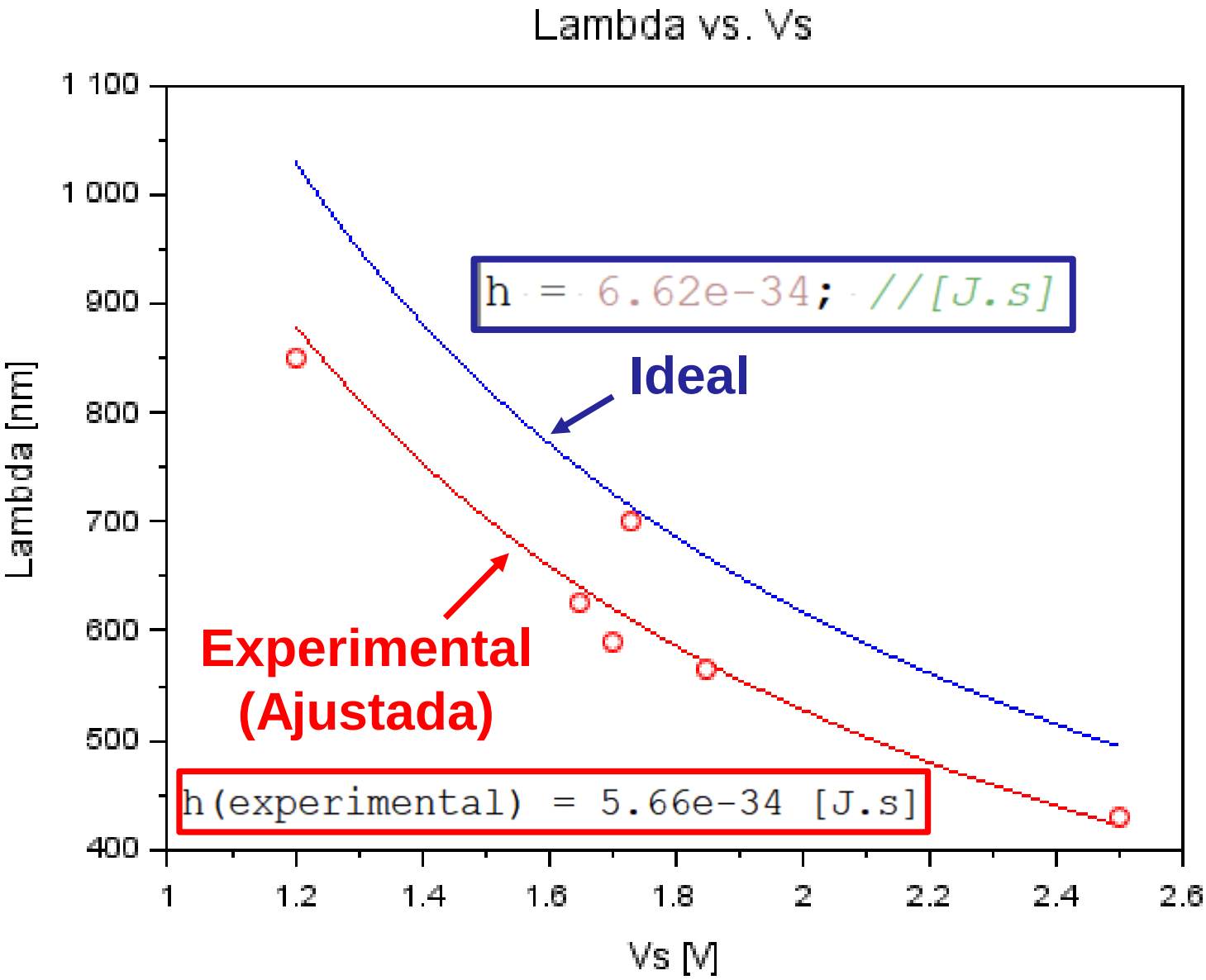

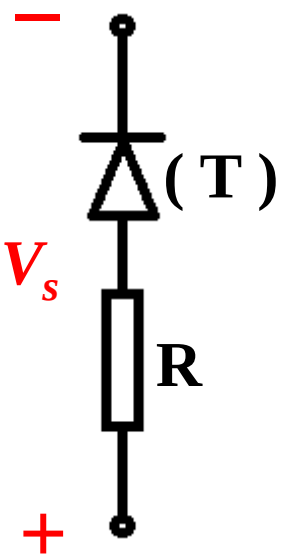

$$K = \frac{hc}{e} \simeq V_s \lambda \qquad \lambda \simeq K\left(\frac{1}{V_s}\right) \qquad h \simeq \frac{Ke}{c}$$

Programa SCILAB: Planck.sce