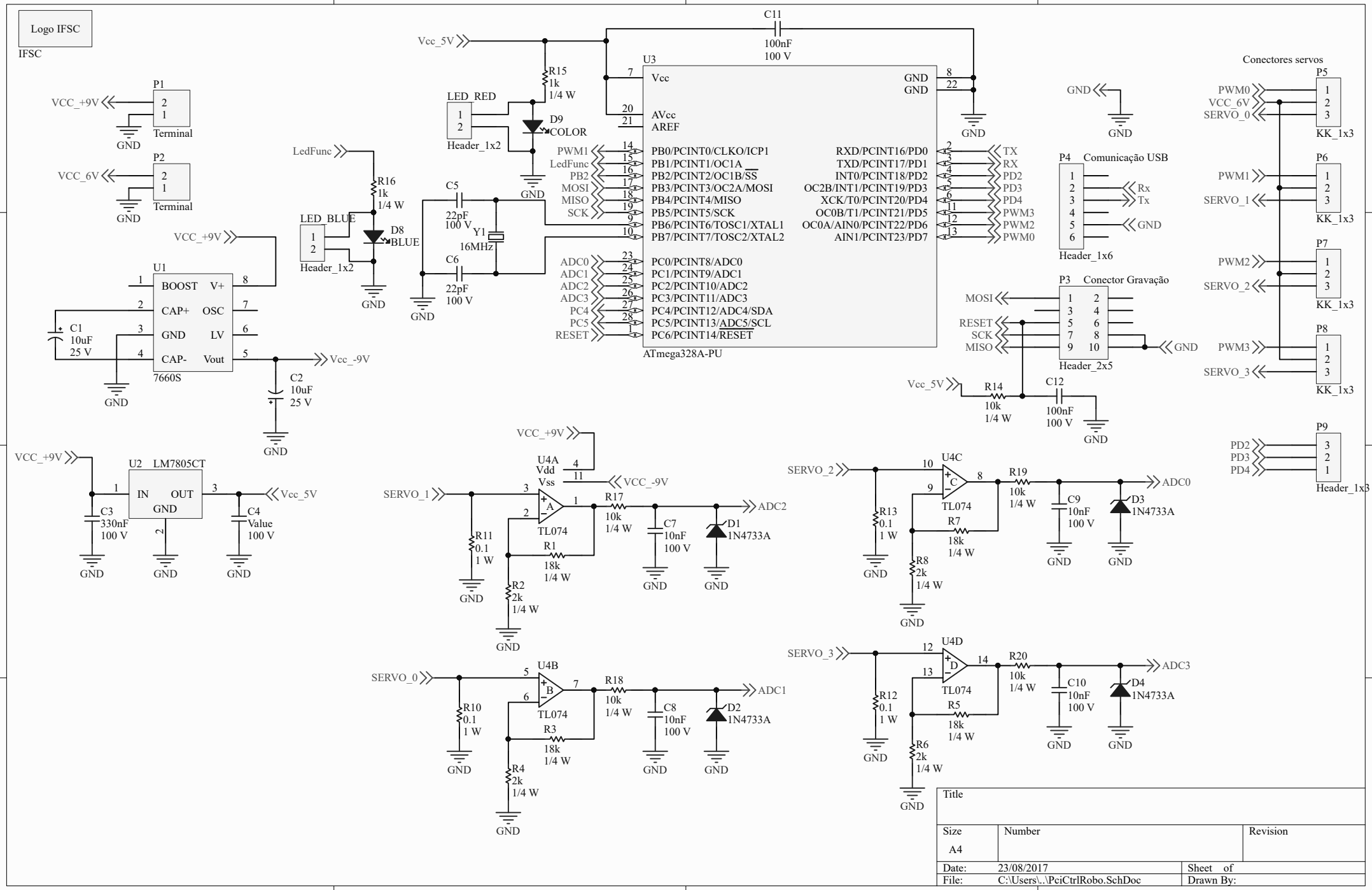
Logo IFSC
IFSC
Vcc_5V
C11
100nF
100 V
U3
Vcc
AVcc
AREF
GND
GND
PB0/PCINT0/CLKO/ICP1
PB1/PCINT1/OC1A
PB2/PCINT2/OC1B/SS
PB3/PCINT3/OC2A/MOSI
PB4/PCINT4/MISO
PB5/PCINT5/SCK
PB6/PCINT6/TOSC1/XTAL1
PB7/PCINT7/TOSC2/XTAL2
PC0/PCINT8/ADC0
PC1/PCINT9/ADC1
PC2/PCINT10/ADC2
PC3/PCINT11/ADC3
PC4/PCINT12/ADC4/SDA
PC5/PCINT13/ADC5/SCL
PC6/PCINT14/RESET
RXD/PCINT16/PD0
TXD/PCINT17/PD1
INT0/PCINT18/PD2
OC2B/INT1/PCINT19/PD3
XCK/T0/PCINT20/PD4
OC0B/T1/PCINT21/PD5
OC0A/AIN0/PCINT22/PD6
AIN1/PCINT23/PD7
ATmega328A-PU
PWM1
LedFunc
PB2
MOSI
MISO
SCK
ADC0
ADC1
ADC2
ADC3
PC4
PC5
RESET
TX
RX
PD2
PD3
PD4
PWM3
PWM2
PWM0
R15
1k
1/4 W
D9
COLOR
LED_RED
Header_1x2
C5
22pF
100 V
Y1
16MHz
C6
22pF
100 V
R16
1k
1/4 W
D8
BLUE
LED_BLUE
Header_1x2
P1
Terminal
P2
Terminal
VCC_+9V
VCC_6V
U1
BOOST
V+
CAP+
OSC
GND
LV
CAP-
Vout
7660S
C1
10uF
25 V
C2
10uF
25 V
Vcc_-9V
P4
Comunicação USB
Rx
Tx
Header_1x6
P3
Conector Gravação
MOSI
RESET
SCK
MISO
Header_2x5
R14
10k
1/4 W
C12
100nF
100 V
Conectores servos
P5
PWM0
VCC_6V
SERVO_0
KK_1x3
P6
PWM1
SERVO_1
KK_1x3
P7
PWM2
SERVO_2
KK_1x3
P8
PWM3
SERVO_3
KK_1x3
P9
PD2
PD3
PD4
Header_1x3
U2
LM7805CT
IN
OUT
GND
C3
330nF
100 V
C4
Value
100 V
Vcc_5V
U4A
Vdd
Vss
VCC_-9V
SERVO_1
TL074
R11
0.1
1 W
R2
2k
1/4 W
R1
18k
1/4 W
R17
10k
1/4 W
C7
10nF
100 V
D1
1N4733A
ADC2
U4B
SERVO_0
TL074
R10
0.1
1 W
R4
2k
1/4 W
R3
18k
1/4 W
R18
10k
1/4 W
C8
10nF
100 V
D2
1N4733A
ADC1
U4C
SERVO_2
TL074
R13
0.1
1 W
R8
2k
1/4 W
R7
18k
1/4 W
R19
10k
1/4 W
C9
10nF
100 V
D3
1N4733A
ADC0
U4D
SERVO_3
TL074
R12
0.1
1 W
R6
2k
1/4 W
R5
18k
1/4 W
R20
10k
1/4 W
C10
10nF
100 V
D4
1N4733A
ADC3
Title
Size
A4
Number
Revision
Date:
23/08/2017
Sheet of
File:
C:\Users\..\PciCtrlRobo.SchDoc
Drawn By: