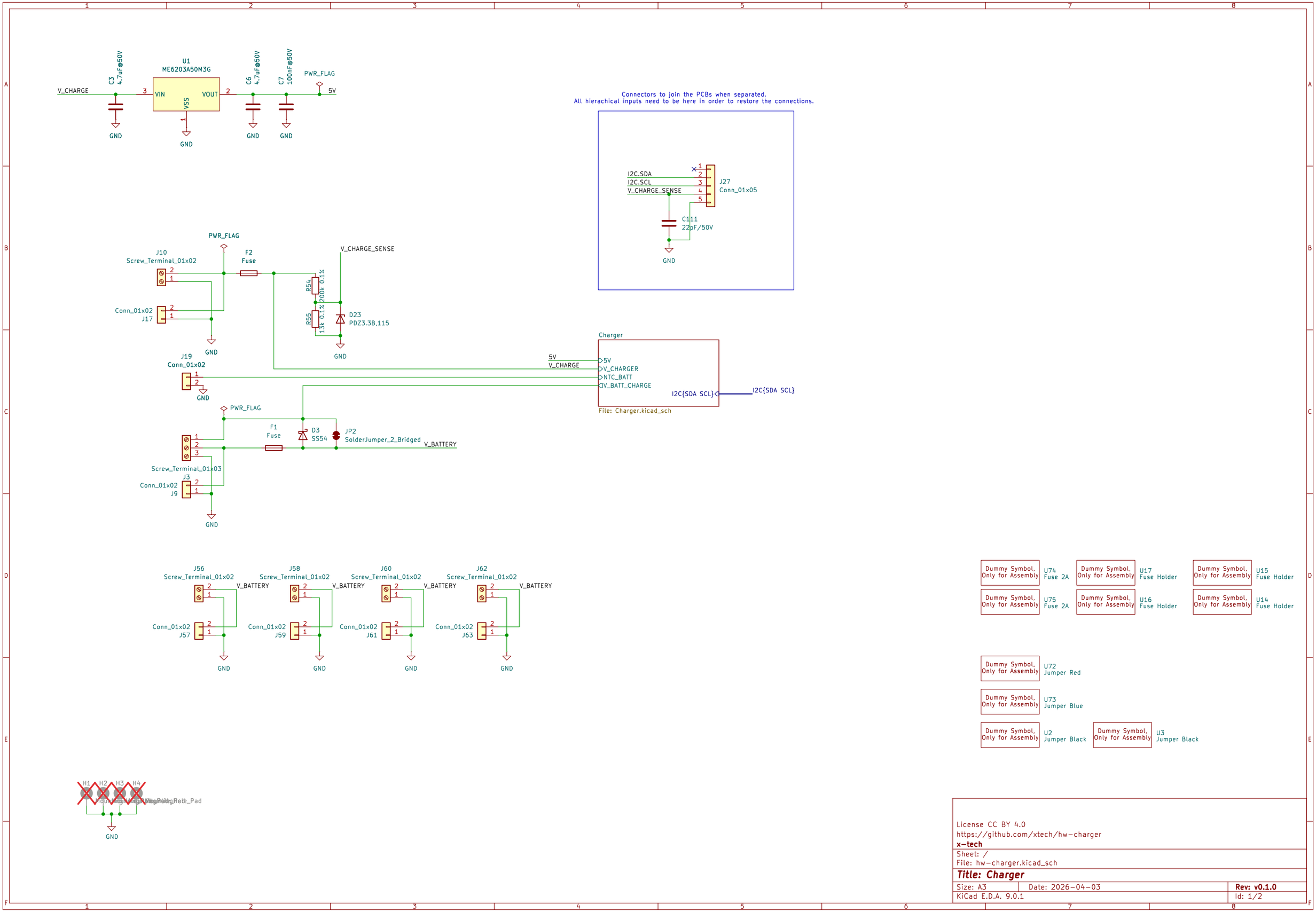

License CC BY 4.0
https://github.com/xtech/hw-charger
x-tech

Sheet: /
File: hw-charger.kicad_sch

Title: Charger

Size: A3	Date: 2026-04-03	**Rev: v0.1.0**
KiCad E.D.A. 9.0.1		Id: 1/2

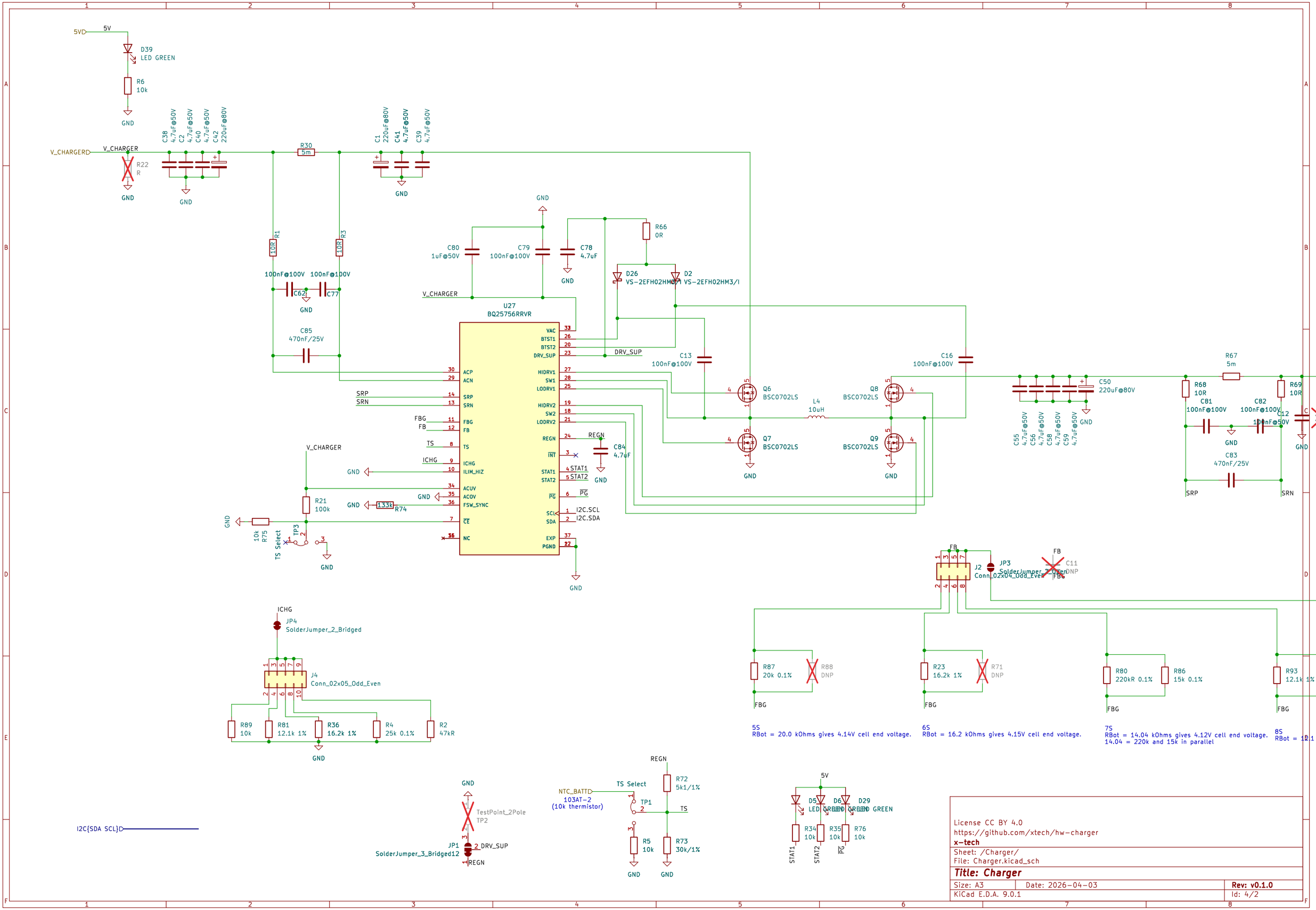
5V
D39
LED GREEN
R6
10k
GND
V_CHARGER
R22
R
C38
4.7uF@50V
C2
4.7uF@50V
C40
4.7uF@50V
C42
220uF@80V
R30
5m
C1
220uF@80V
C41
4.7uF@50V
C39
4.7uF@50V
R1
10R
R3
10R
100nF@100V
C62
C77
C85
470nF/25V
C80
1uF@50V
C79
100nF@100V
C78
4.7uF
R66
0R
D26
VS-2EFH02HM3/I
D2
VS-2EFH02HM3/I
U27
BQ25756RRVR
VAC
BTST1
BTST2
DRV_SUP
ACP
ACN
SRP
SRN
FBG
FB
TS
ICHG
ILIM_HIZ
ACUV
ACOV
FSW_SYNC
CE
NC
HIDRV1
SW1
LODRV1
HIDRV2
SW2
LODRV2
REGN
INT
STAT1
STAT2
PG
SCL
SDA
EXP
PGND
C13
100nF@100V
C16
100nF@100V
Q6
BSC0702LS
Q7
BSC0702LS
Q8
BSC0702LS
Q9
BSC0702LS
L4
10uH
C84
4.7uF
I2C.SCL
I2C.SDA
R21
100k
R74
133k
R75
10k
TS Select
TP3
C55
4.7uF@50V
C56
4.7uF@50V
C58
4.7uF@50V
C59
4.7uF@50V
C50
220uF@80V
R67
5m
R68
10R
R69
10R
C81
100nF@100V
C82
100nF@100V
C12
100nF@50V
C83
470nF/25V
SRP
SRN
FBG
JP3
SolderJumper_2_Open
J2
Conn_02x04_Odd_Even
C11
DNP
ICHG
JP4
SolderJumper_2_Bridged
J4
Conn_02x05_Odd_Even
R89
10k
R81
12.1k 1%
R36
16.2k 1%
R4
25k 0.1%
R2
47kR
R87
20k 0.1%
R88
DNP
R23
16.2k 1%
R71
DNP
R80
220kR 0.1%
R86
15k 0.1%
R93
12.1k 1%
5S
RBot = 20.0 kOhms gives 4.14V cell end voltage.
6S
RBot = 16.2 kOhms gives 4.15V cell end voltage.
7S
RBot = 14.04 kOhms gives 4.12V cell end voltage.
14.04 = 220k and 15k in parallel
8S
RBot = 12.1 kOhms
I2C{SDA SCL}
TestPoint_2Pole
TP2
JP1
SolderJumper_3_Bridged12
DRV_SUP
NTC_BATT
103AT-2
(10k thermistor)
TP1
R72
5k1/1%
R5
10k
R73
30k/1%
D5
D6
D29
LED GREEN
R34
10k
R35
10k
R76
10k
License CC BY 4.0
https://github.com/xtech/hw-charger
x-tech
Sheet: /Charger/
File: Charger.kicad_sch
Title: Charger
Size: A3
Date: 2026-04-03
Rev: v0.1.0
KiCad E.D.A. 9.0.1
Id: 4/2