Dillon Ma
Team 6
Teammates: Thomas Wang, Mithun Roy, Leena Aljurashi
ILR 5
Mar 10, 2026

Individual Progress

For this week's system demo #3, we had five goals to demonstrate: Physical static model of a leg, Digital demo/simulator of IK for a leg, Connected user-input devices to the controller, CAD finalized. Individually, I worked on finalizing the CAD models to match the calculated leg lengths from before. I also redesigned the parts into more separate pieces for the laser cutter. Pictured below is the full system assembly. I was unable to actually fabricate the model since I was out of town for spring break, but I was able to get all the necessary parts to Mithun to laser cut and piece together for the physical mockup. From the physical mockup results, I decided to make additional changes to the parts to make it easier for production and stability.

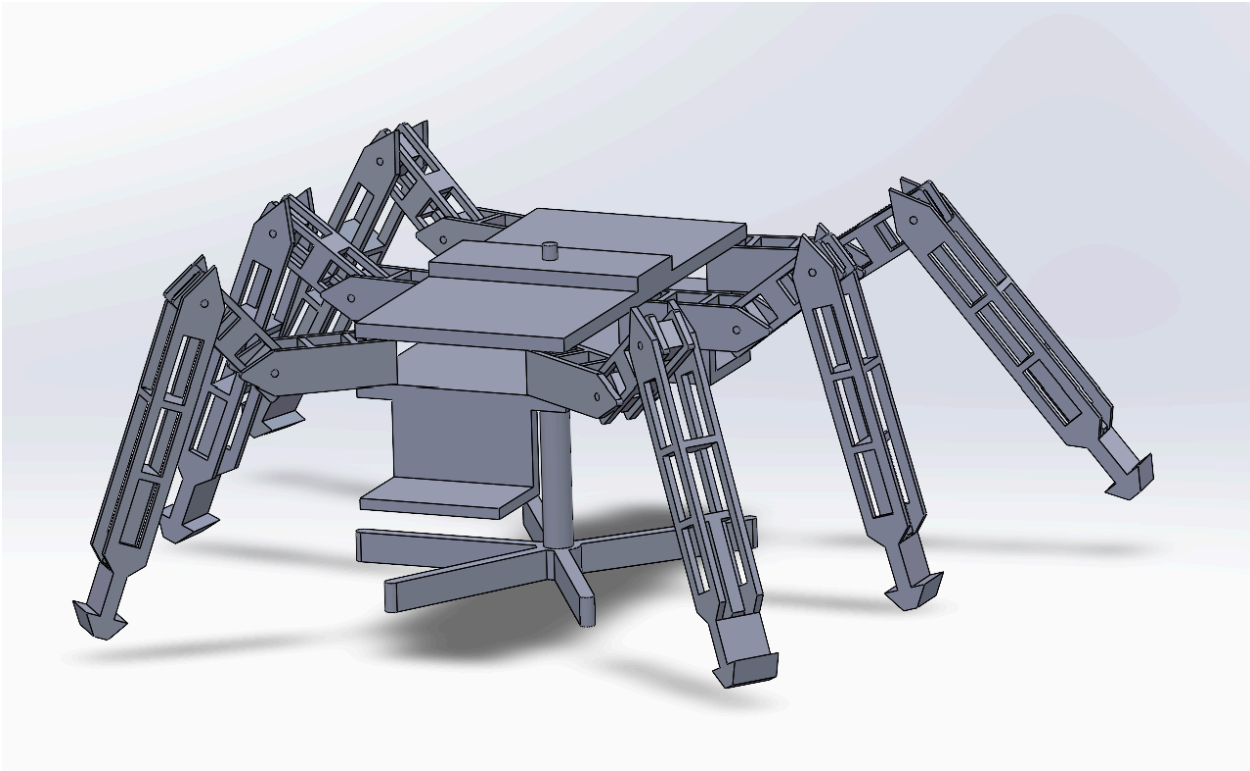

Figure 1: CAD model of full hexapod design

Challenges

The main challenge this week was the fact that we were unable to access the materials we ordered before break until the weekend before the system demo. This made us change many of our original system demo plans and expectations. In particular, the physical mockup needed to be rushed and we were unable to make a fully functional leg. Also, the servos we ordered did not come with servo horns, which complicated our design process and requires more research to find the right product to buy.

Teamwork

. For teamwork this week, we split the tasks up based on our strengths. I collaborated with Mithun to work on the physical mockup. I am also planning to continue working with Mithun on creating our first fully functional leg for testing.

Plans

We have defined our expectations and system demo plans for the following week. This coming week we are planning to create 1 fully functional leg and conduct tests on it. We will finalize the servo horn, 3D print test pieces to test hole sizes and tolerance issues, solder boards for electronics, wire up servos and finish the test leg. We also want to improve our IK simulation to fix our joint locations and calculate speed by our gait.