1 2 3 4 5 6 7 8 9 10 11 12 13 14

A B C D E F G H

TECHNICAL BLUEPRINT — 3D ISOMETRIC VIEW

DINING CHAIR 1

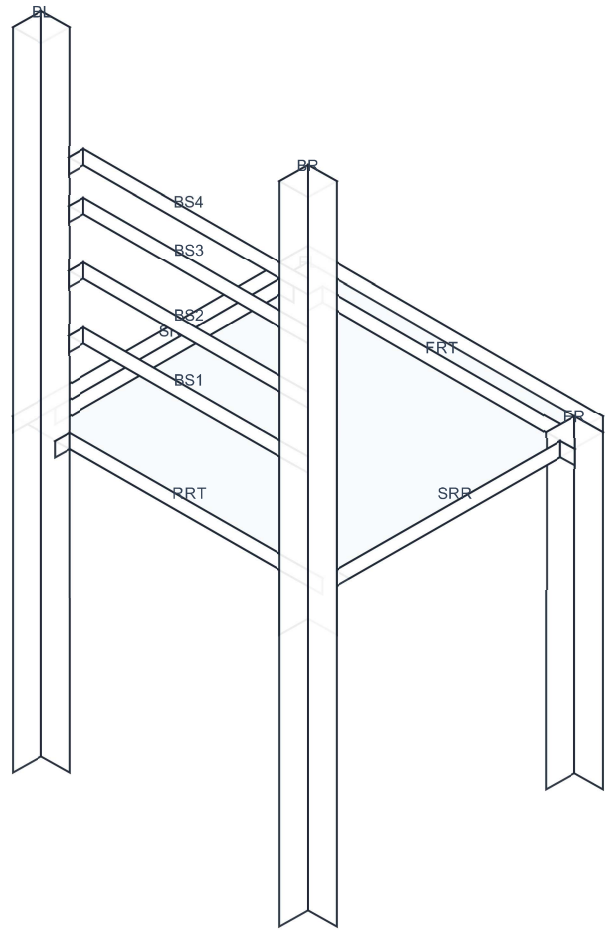

WIDTH: 420 mm
HEIGHT: 940 mm
DEPTH: 420 mm

PROJECT / BLUEPRINT TITLE		OBJECT	VIEW	UNIT
eto yun		**Dining Chair 1**	**3D View**	**MM**
DATE	SHEET	MATERIAL	DIMENSIONS	SCALE
2026-03-15	A-107	Oak Wood	420 mm × 940 mm × 420 mm	NTS

TECHNICAL BLUEPRINT — FRONT VIEW

DINING CHAIR 1

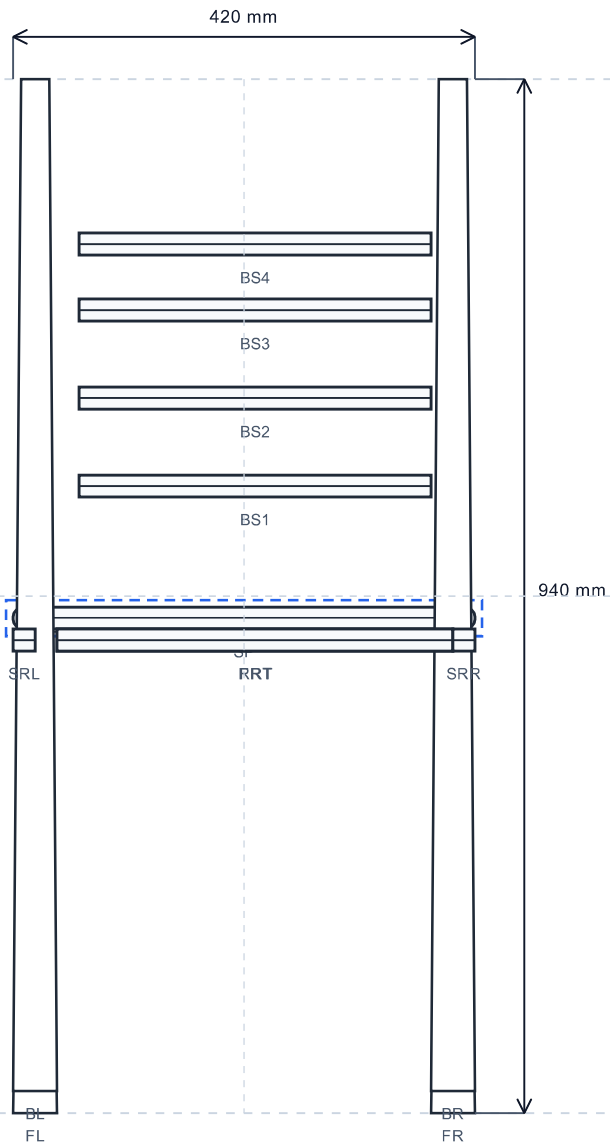

PARTS: 13
SELECTED: SP

AXIS H: X (Width)
AXIS V: Y (Height)

PROJECT / BLUEPRINT TITLE		OBJECT	VIEW	UNIT
eto yun		**Dining Chair 1**	**Front View**	**MM**
DATE	SHEET	MATERIAL	DIMENSIONS	SCALE
2026-03-15	A-101	Oak Wood	420 mm × 940 mm × 420 mm	NTS

TECHNICAL BLUEPRINT — BACK VIEW

DINING CHAIR 1

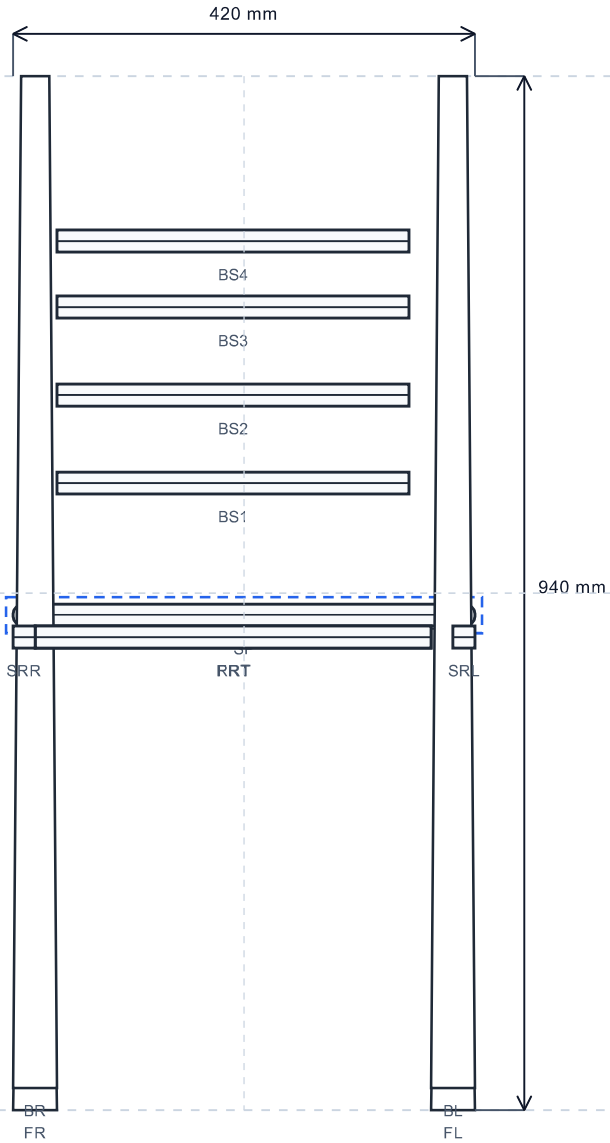

PARTS: 13
SELECTED: SP

AXIS H: X (Width)
AXIS V: Y (Height)

PROJECT / BLUEPRINT TITLE		OBJECT	VIEW	UNIT
eto yun		**Dining Chair 1**	**Back View**	**MM**
DATE	SHEET	MATERIAL	DIMENSIONS	SCALE
2026-03-15	A-102	Oak Wood	420 mm × 940 mm × 420 mm	NTS

TECHNICAL BLUEPRINT — LEFT VIEW

DINING CHAIR 1

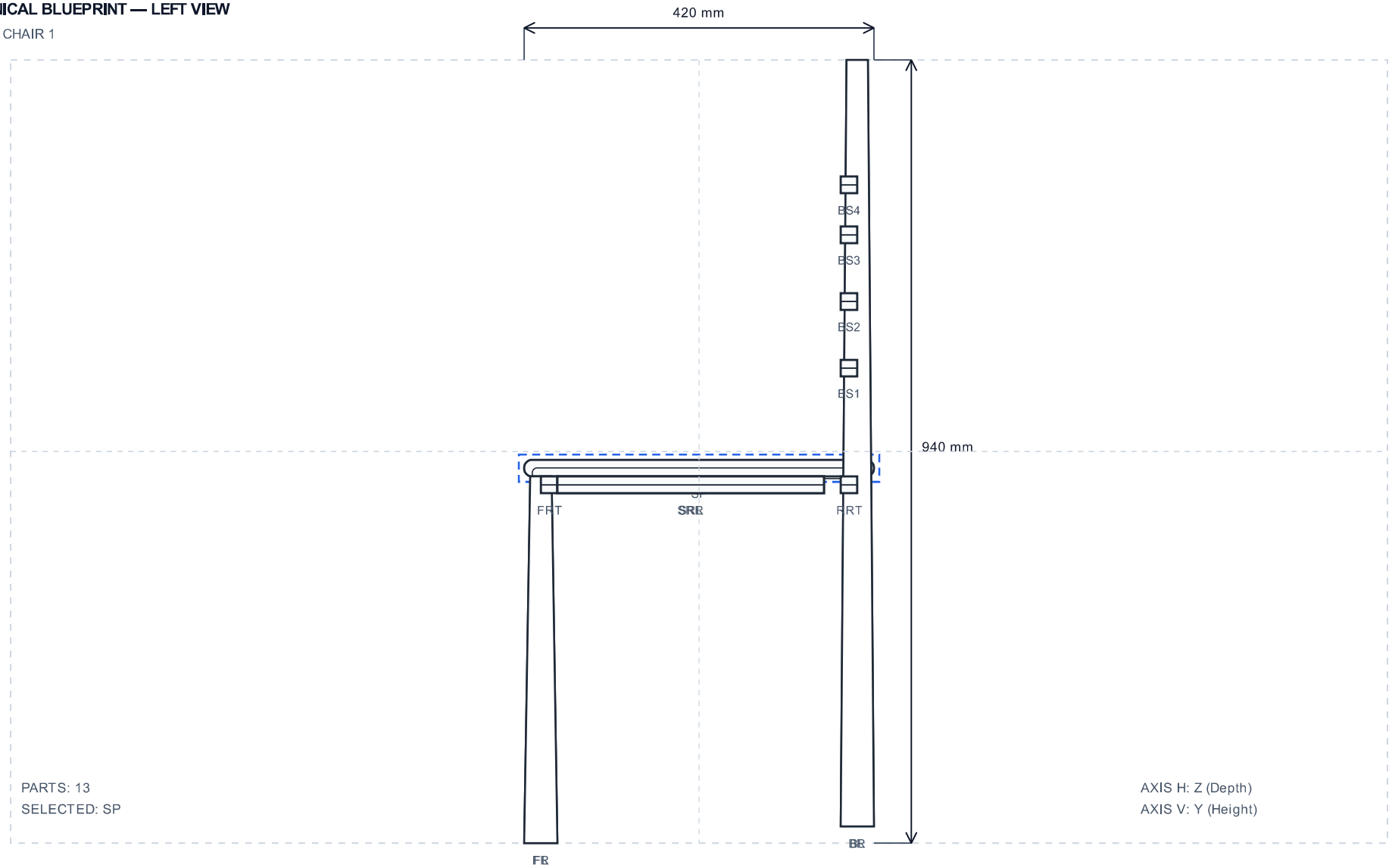

PARTS: 13
SELECTED: SP

AXIS H: Z (Depth)
AXIS V: Y (Height)

PROJECT / BLUEPRINT TITLE		OBJECT	VIEW	UNIT
eto yun		**Dining Chair 1**	**Left View**	**MM**
DATE	SHEET	MATERIAL	DIMENSIONS	SCALE
2026-03-15	A-103	Oak Wood	420 mm × 940 mm × 420 mm	NTS

TECHNICAL BLUEPRINT — RIGHT VIEW

DINING CHAIR 1

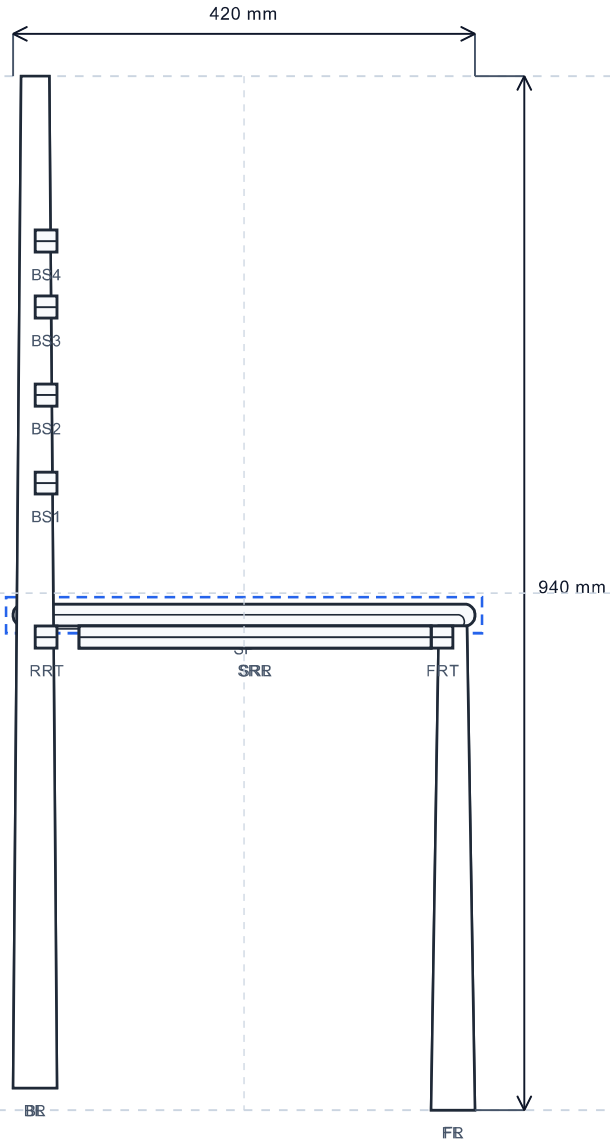

PARTS: 13
SELECTED: SP

AXIS H: Z (Depth)
AXIS V: Y (Height)

PROJECT / BLUEPRINT TITLE		OBJECT	VIEW	UNIT
eto yun		**Dining Chair 1**	**Right View**	**MM**
DATE	SHEET	MATERIAL	DIMENSIONS	SCALE
2026-03-15	A-104	Oak Wood	420 mm × 940 mm × 420 mm	NTS

TECHNICAL BLUEPRINT — TOP VIEW

DINING CHAIR 1

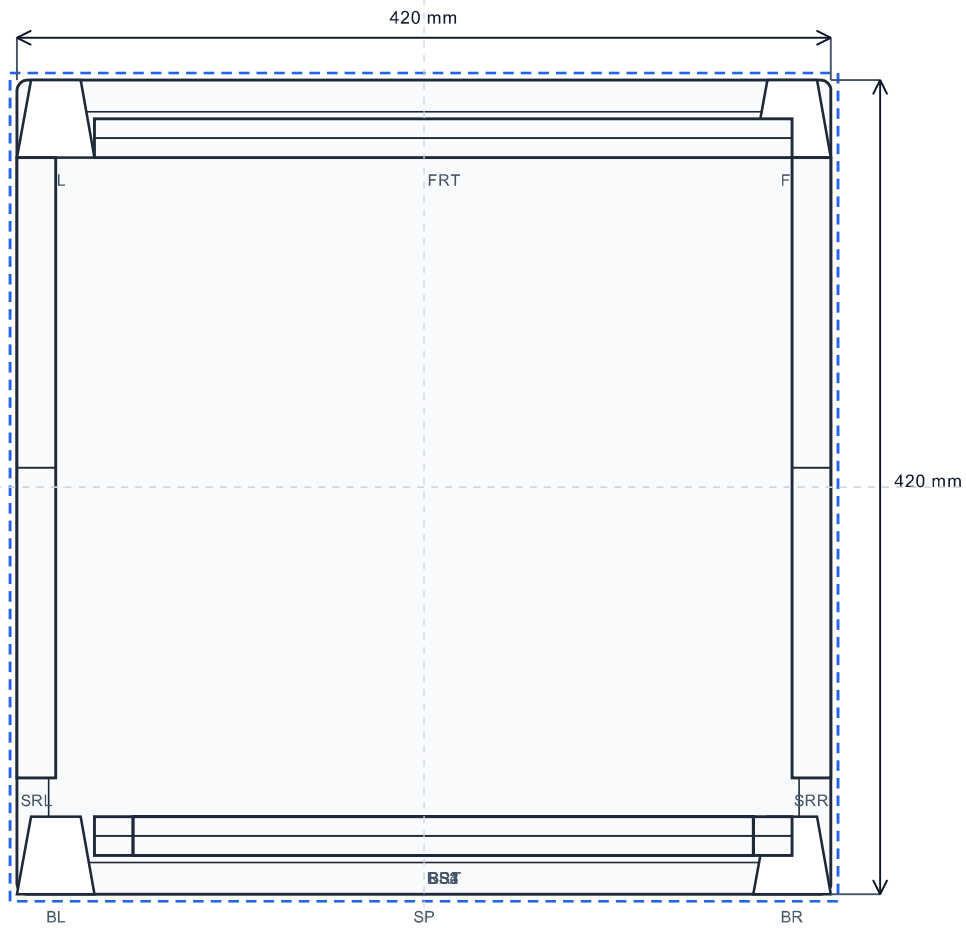

PARTS: 13
SELECTED: SP

AXIS H: X (Width)
AXIS V: Z (Depth)

PROJECT / BLUEPRINT TITLE		OBJECT	VIEW	UNIT
eto yun		**Dining Chair 1**	**Top View**	**MM**
DATE	SHEET	MATERIAL	DIMENSIONS	SCALE
2026-03-15	A-105	Oak Wood	420 mm × 940 mm × 420 mm	NTS

TECHNICAL BLUEPRINT — EXPLODED VIEW

DINING CHAIR 1

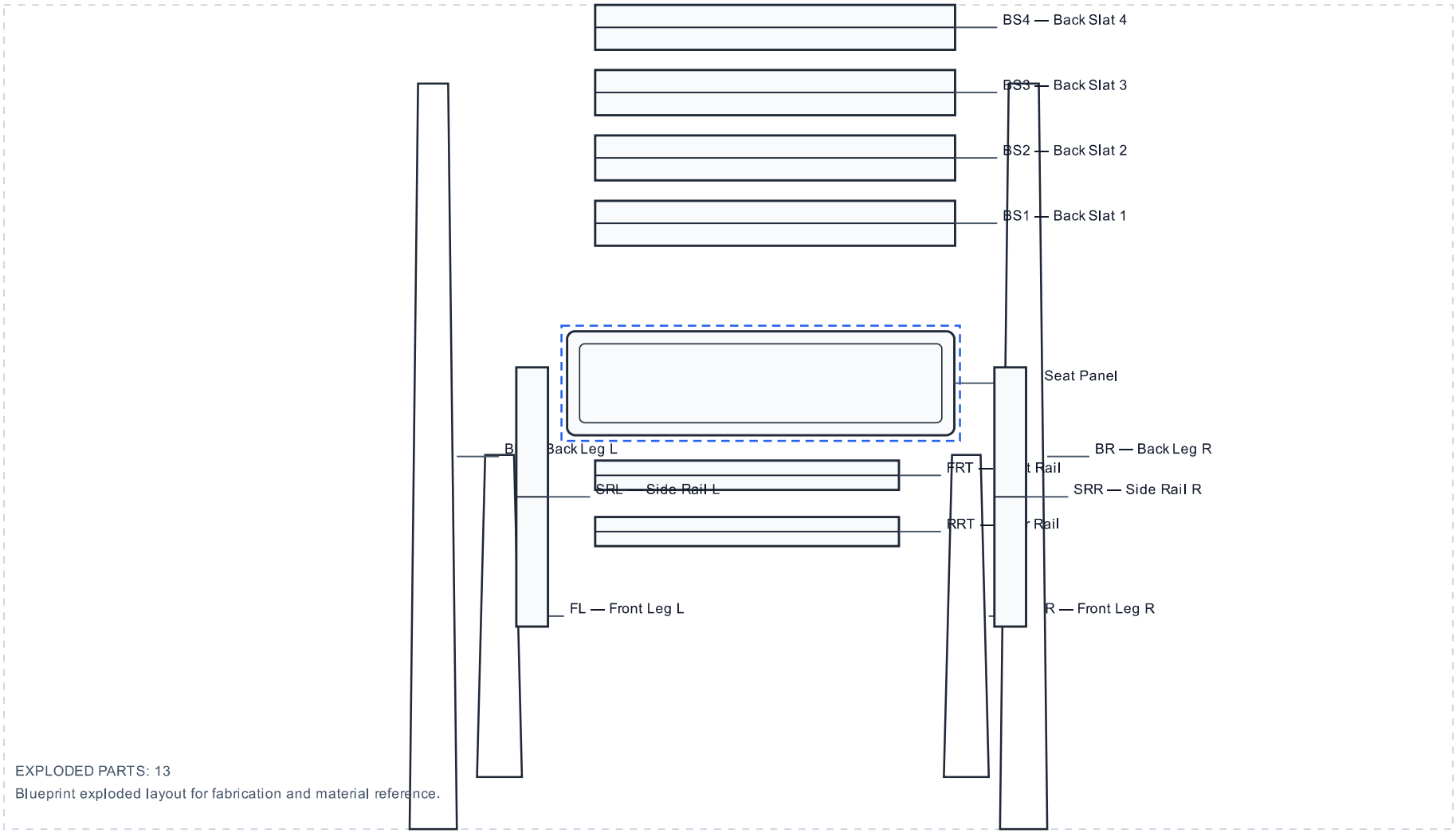

EXPLODED PARTS: 13

Blueprint exploded layout for fabrication and material reference.

PROJECT / BLUEPRINT TITLE		OBJECT	VIEW	UNIT
eto yun		**Dining Chair 1**	**Exploded View**	**MM**
DATE	SHEET	MATERIAL	DIMENSIONS	SCALE
2026-03-15	A-106	Oak Wood	420 mm × 940 mm × 420 mm	NTS

TECHNICAL BLUEPRINT — MATERIALS / BILL OF MATERIALS

Dining Chair 1

Unit: MM
Sheet: A-108
Date: 2026-03-15

Project: eto yun
Dimensions: 420 mm × 940 mm × 420 mm
Object: Dining Chair 1
Materials: Oak Wood

MATERIALS SUMMARY

Material	Qty	Estimated Cost
Oak Wood	13	₱ 7,800.00

PARTS / COMPONENTS LIST

Part Code	Description	Material	Qty	Dimensions	Cost
SP	Seat Panel	Oak Wood	1	420 mm × 20 mm × 420 mm	₱ 1,200.00
FL	Front Leg L	Oak Wood	1	40 mm × 440 mm × 40 mm	₱ 650.00
FR	Front Leg R	Oak Wood	1	40 mm × 440 mm × 40 mm	₱ 650.00
BL	Back Leg L	Oak Wood	1	40 mm × 920 mm × 40 mm	₱ 950.00
BR	Back Leg R	Oak Wood	1	40 mm × 920 mm × 40 mm	₱ 950.00
FRT	Front Rail	Oak Wood	1	360 mm × 20 mm × 20 mm	₱ 480.00
RRT	Rear Rail	Oak Wood	1	360 mm × 20 mm × 20 mm	₱ 480.00
SRL	Side Rail L	Oak Wood	1	20 mm × 20 mm × 320 mm	₱ 520.00
SRR	Side Rail R	Oak Wood	1	20 mm × 20 mm × 320 mm	₱ 520.00
BS1	Back Slat 1	Oak Wood	1	320 mm × 20 mm × 20 mm	₱ 350.00
BS2	Back Slat 2	Oak Wood	1	320 mm × 20 mm × 20 mm	₱ 350.00
BS3	Back Slat 3	Oak Wood	1	320 mm × 20 mm × 20 mm	₱ 350.00
BS4	Back Slat 4	Oak Wood	1	320 mm × 20 mm × 20 mm	₱ 350.00