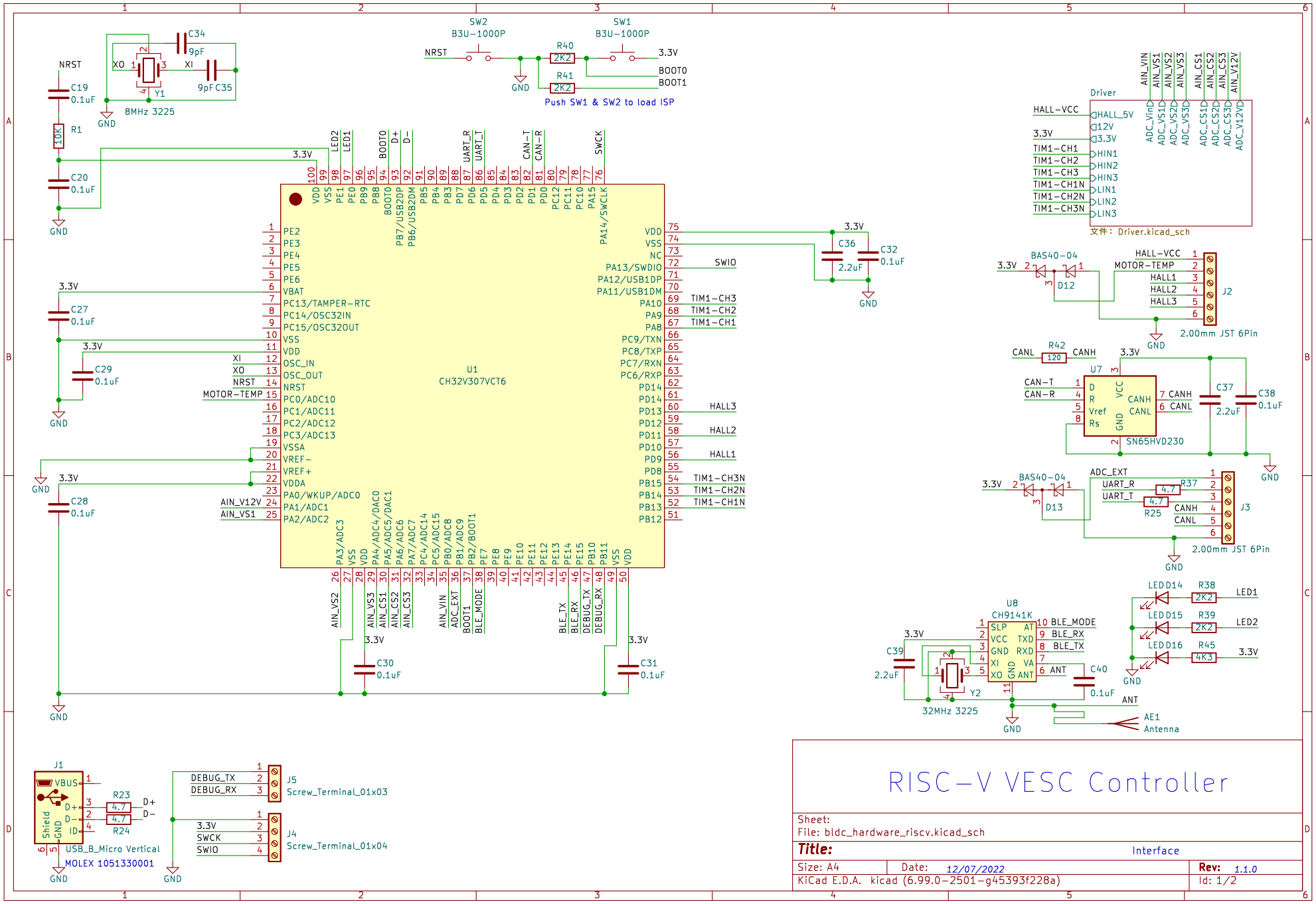
RISC-V VESC Controller
Sheet:
File: bldc_hardware_riscv.kicad_sch
Title: Interface
Size: A4
Date: 12/07/2022
Rev: 1.1.0
KiCad E.D.A. kicad (6.99.0-2501-g45393f228a)
Id: 1/2
U1
CH32V307VCT6
Driver
文件: Driver.kicad_sch
SN65HVD230
CH9141K
Push SW1 & SW2 to load ISP
8MHz 3225
32MHz 3225
USB_B_Micro Vertical
MOLEX 1051330001
Screw_Terminal_01x03
Screw_Terminal_01x04
2.00mm JST 6Pin
Antenna

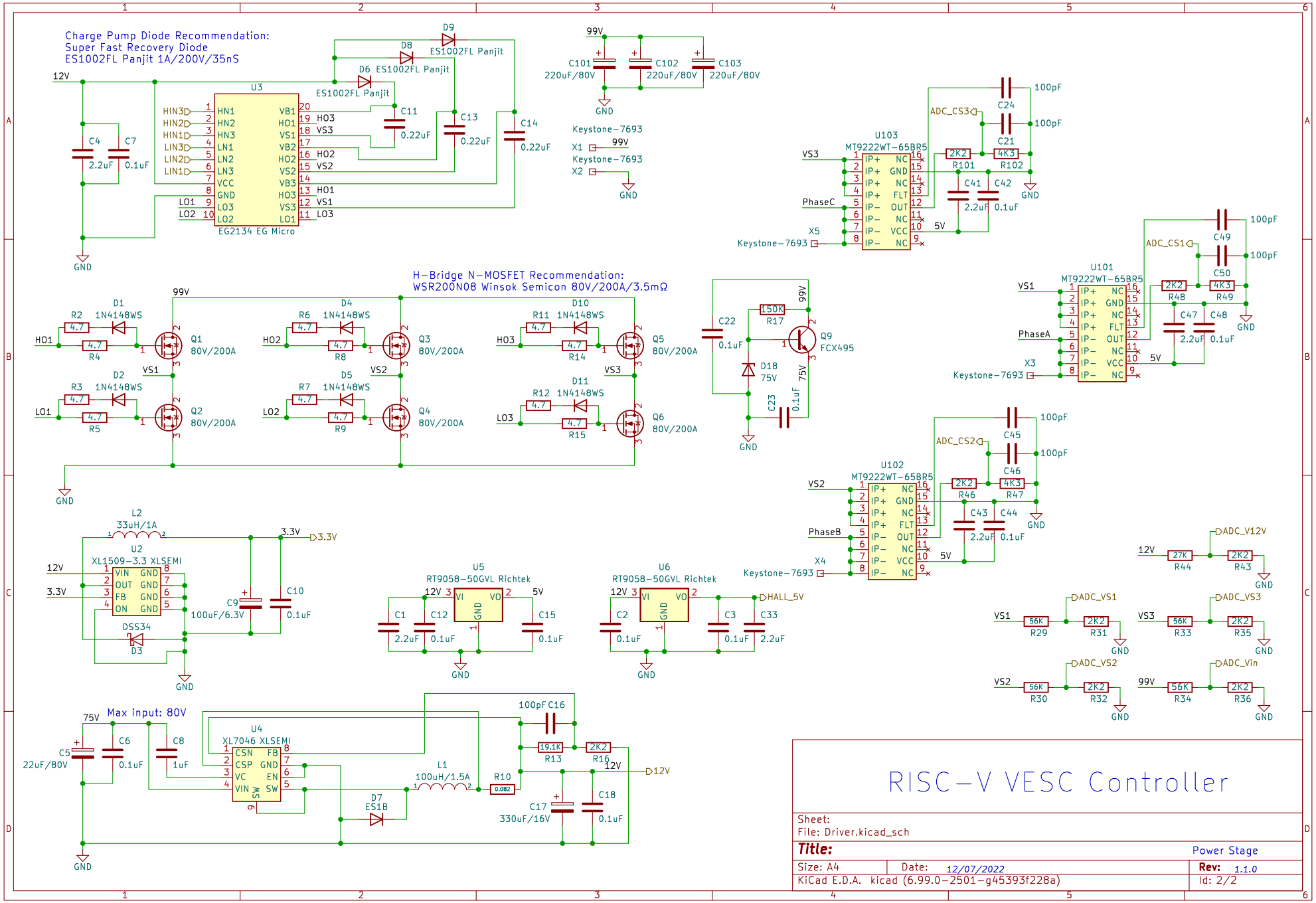

RISC-V VESC Controller

Sheet:
File: Driver.kicad_sch

Title: Power Stage

Size: A4 | Date: 12/07/2022 | **Rev:** 1.1.0

KiCad E.D.A. kicad (6.99.0-2501-g45393f228a) | Id: 2/2