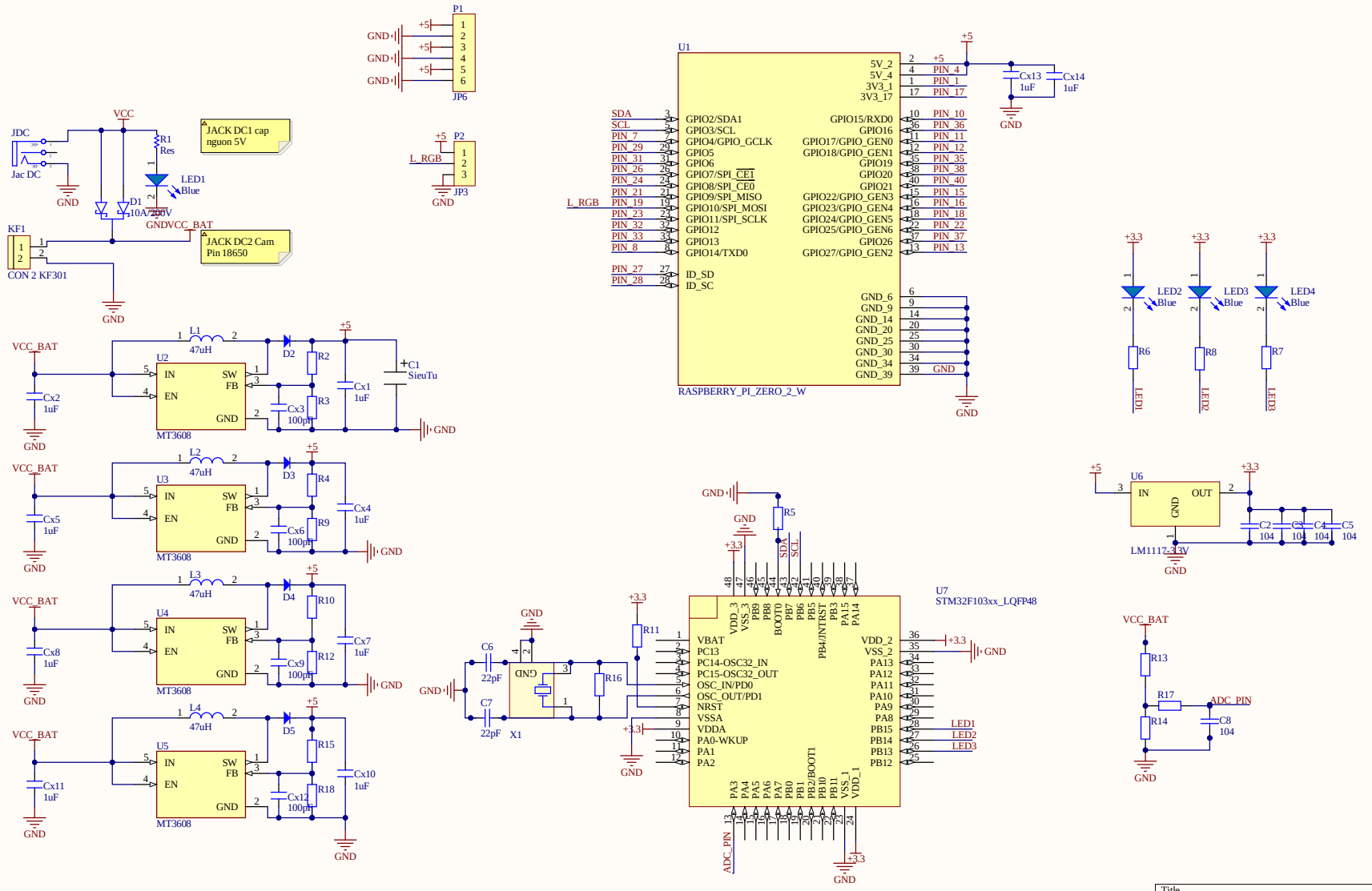

Title		
Size B	Number	Revision
Date: 10/20/2024	Sheet of	
File: D:\OUTSOURCING\...\SCH_HAT_5V5A.SchDoc	Drawn By:	