A1,Ver03

MO WORKING SPECS(only■appl.)	
WALL T.	■ 1.6 ± 0.1 mm(BASIC)
DRAFT	■ DRAFT MUST GIVE THINNER SEC. FOR NOMINAL DIM.
	■ DRAFT ≤ 1°U.O.S.
R VALUE	■ CORNR R≤0.2 U.O.S. I.CORNR R≤0.2 U.O.S.
OVAL HOLE	MAY BE
	MAY BE
FLASH, MARK	■ FLASH H.≤0.05
	■ GT MK H≤0.5 ,D≤0.3
	■ EP MK H≤0 ,D≤0.3
INSERT	TORSN STRGTH N·cm MIN (kgf·cm MIN)
	PULL-OUT STRGTH N(kgf)MIN
	PROTR≤ ,RECS≤
SURF. TRT	
1ST. APPEA. TEX.	
2ND. APPEA. TEX.	
CEM TEX.	
INT/EXTERIOR	
PRINTING	
PAINTING	GIVEN
HANDLING	
MEASURING	■ LEAVE AT20 ± 5°C4h
INSP. JIG No.	■ QC7-6967-A01
DATA	~~~~CRITCL.INSP.DATA REQ.FOR EACH LOT
LIMIT SMPL	:INSP.AGNST LIM.SMPL
MARKING	■ TYPE FACE,SIZE U.O.S :OPT. PROTRUSION:0.2 OR SO
CASE	SPECL FOR QLTY ASSUR.
DEL'Y SPECS	REQ. No.
CERTF.	■ REQ.
MTRL.MARK.	■ REQ. >PPE+PS-(GF+PS)35 FR(40)<
REGRIND RATE	
ARTWORK NO.	

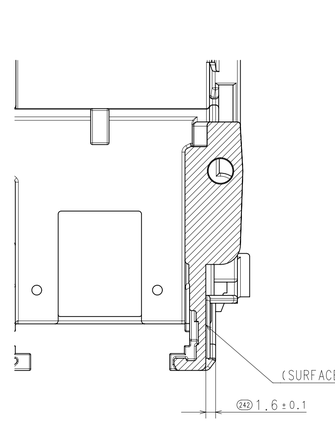

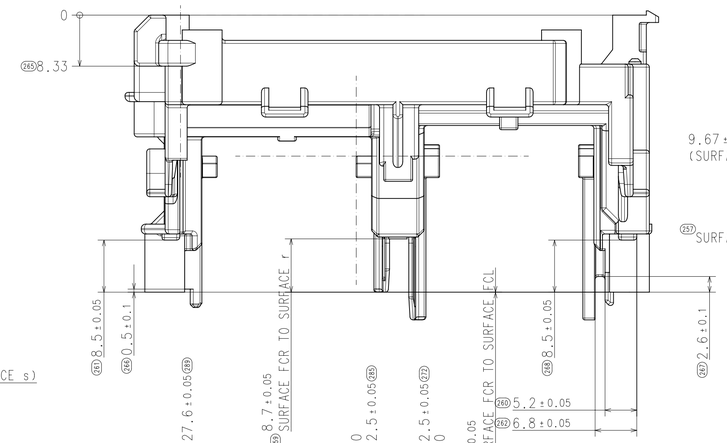

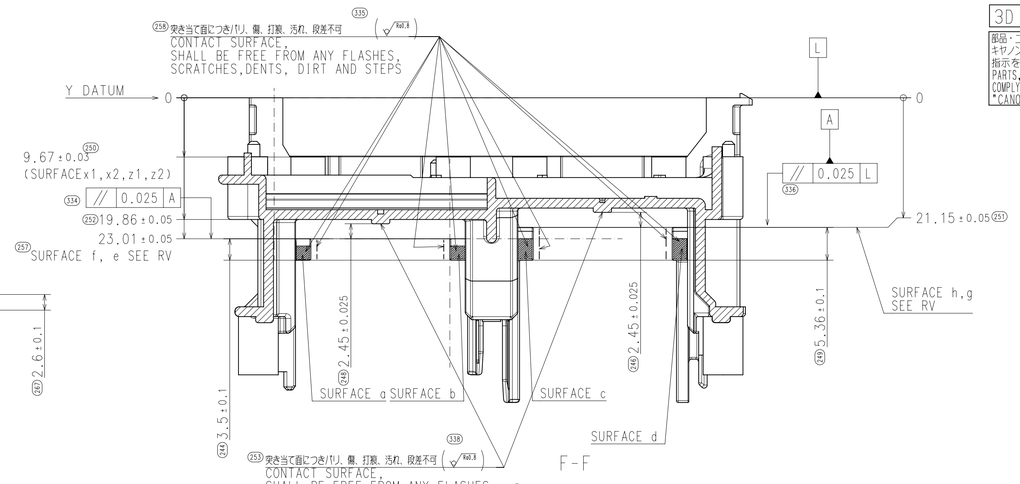

3D MIN.DRAWING

部品・ユニットおよび、包装部品・材料は、キヤノングリーン調達基準書の「2A/3A使用禁止物質」の指示を厳守する。
PARTS, UNIT AND/OR PACKAGING COMPONENTS SHALL COMPLY WITH THE REQUIREMENTS OF SECTION 2A/3A OF "CANON GREEN PROCUREMENT STANDARDS."

	CHANGE MADE TO CONTROL INFORMATION(TITLE PANEL)
★	CHANGE MADE TO INFORMATION STAMP
	CHANGE MADE TO SPECIFICATION TABLE

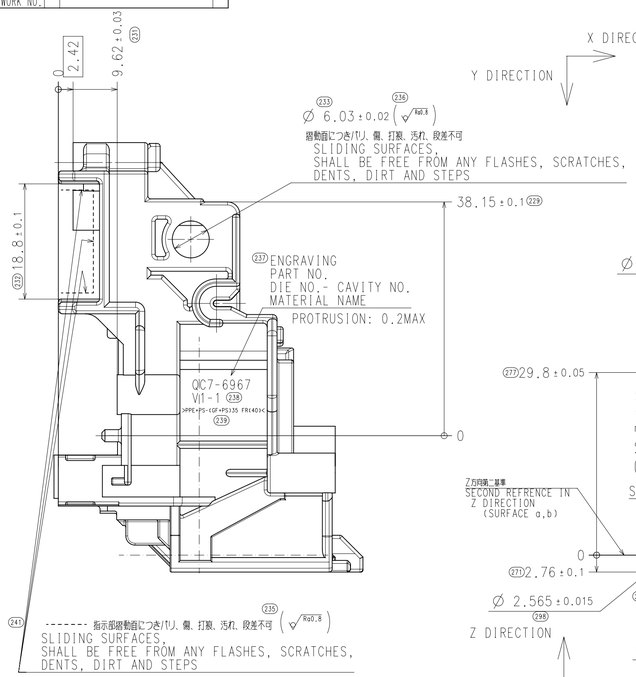

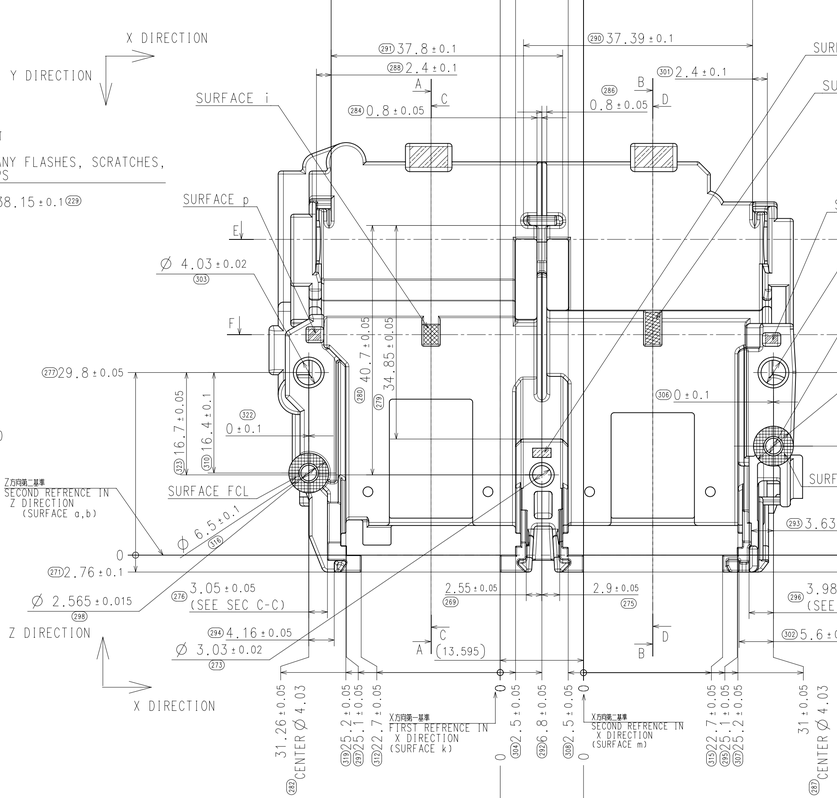

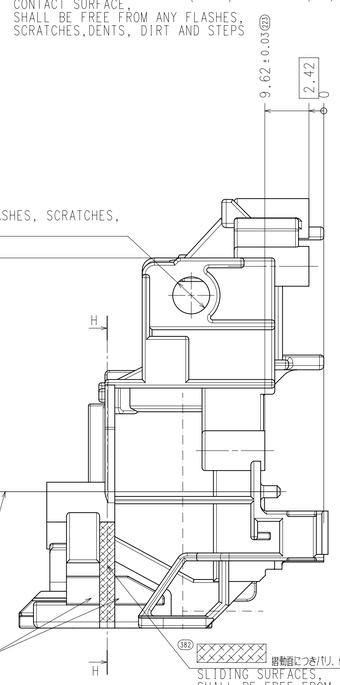

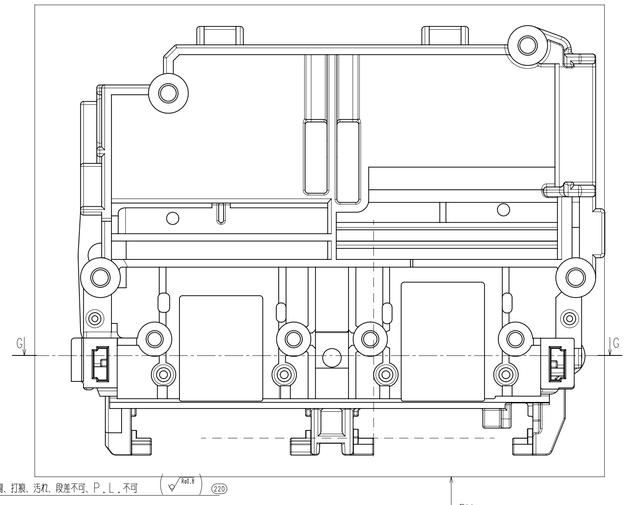

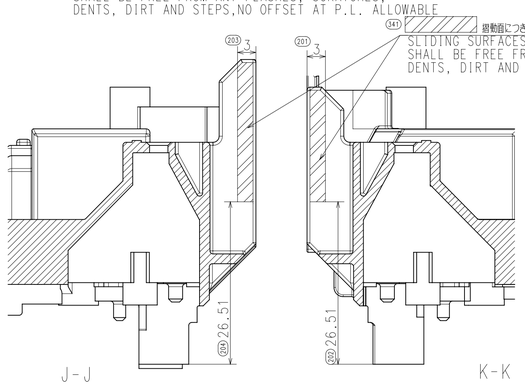

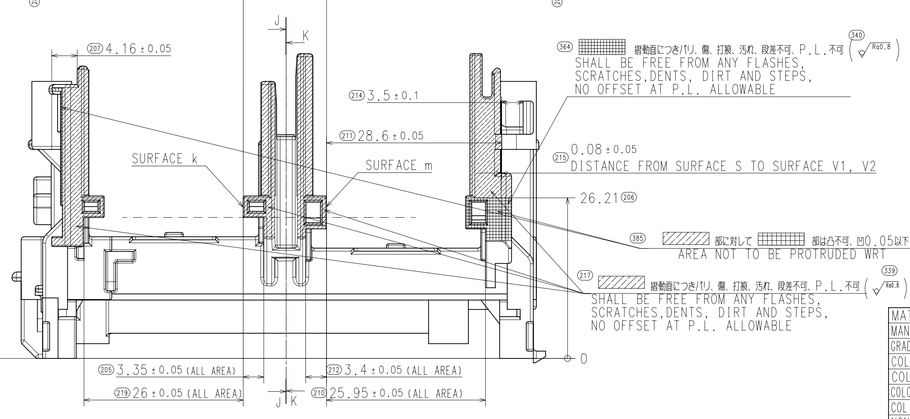

記事
1.油脂、汚れ、異物、ごみの付着不可
2.SURFACE e, f, g, h, i, j はY方向.
SURFACE a, b, c, dはZ方向.
SURFACE k, m はX方向のヘッド突当て面である
抜き勾配不可
3.X部、およびY部は各々の寸法基準から測定のこと
4.リグラインド材の使用 25 %以下可
5. ------ 部は摺動面につき/バリ、傷、打痕、段差不可
6.センタ振分け寸法公差:±0.1
7.図面変更時の規格変更申請、及び、量産組立工場での品番管理が必要な部品である

NOTES
358 1.PART SHALL BE FREE FROM ANY OIL, DIRT, FOREIGN SUBSTANCES AND DUST
357 2.SURFACE e, f, g, h, i, j : DATUM SURFACE IN HEAD CONTACT IN Y-DIRECTION
SURFACE a, b, c, d: DATUM SURFACE IN HEAD CONTACT IN Z-DIRECTION
SURFACE k, m : DATUM SURFACE IN HEAD CONTACT IN X-DIRECTION
NOT DRAFT ALLOWABLE
348 3.PORTION X AND PORTION Y SHALL BE MEASURED WITH EACH MEASURING DATUM
347 4.REGRIND MATERIAL MAY BE USED UP TO 25 %
346 5.------SURFACES, SLIDING SURFACES, SHALL BE FREE FROM ANY FLASHES, SCRATCHES, DENTS AND STEPS
349 6.TOLERANCE FOR DIMENSIONS SYMMETRICALLY DIVIDED BY C.L.: ±0.1
352 7.FOLLOWING ACTIONS ARE REQUIRED: APPROVAL FOR CHANGE RELATED TO ELECTRICAL SAFETY REGULATIO
AT ENGINEERING CHANGE; AND MANAGEMENT OF REVISION NUMBERS BY RESPONSIBLE PLANT

MATERIAL	PPE+PS
MANUFCTRER	SHPP JAPAN LLC
GRADE/TP NO.	PCN2615
COLOR NAME	STANDARD BLACK
COLOR NO.	-
COLORING NO.	-
COL.DIF.CL.	-
NONFLMBLTY	UL94 V-1 (APPROVED THICKNESS 1.5)

SURFACE TEXTURE SYMBOL: Ra6.3, Ra0.8

TOL.CLS:AmrRf		GEO.TOL.	DAT.
DIMENSN:x (±)		—	
x≤ 3	0.10	⏥	
3 <x≤ 20	0.15	○	
20 <x≤ 120	0.20	⌒	
120 <x≤ 150	0.25	⊥	
150 <x≤ 250	0.30	⌯	
250 <x≤ 300	0.35	⌖	
300 <x≤ 350	0.40		
350 <x≤ 400	0.45		
400 <x≤ 450	0.50	◎	
450 <x≤ 500	0.55		
- <x≤ -	-		
- <x≤ -	-		
- <x≤ -	-		
- <x≤ -	-	ANGLE	±°'

SUB. DESIGNED BY	CHANGED BY	CHECKED BY	2ND APPROVED BY
—	—	—	

1ST APPROVED BY 2022/06/23
テクノ内藤212部課長
橋本 康人

DESIGNED BY 629-4527
DP-IJD
麻田 翔太

DRAWN BY
—

REVISION NOTE(Chg comment ★x1)

DATE 2022/06/22 | REV. 009 | CLS.

PARTS NO. QC7-6967-000

PARTS NAME CR CARRIAGE G226

SCALE 2:1 | PAGE 1/3 | MAS.

★/印は図表面所を指す
★/印 DENOTES EC PLACE.

Canon

A1,Ver03

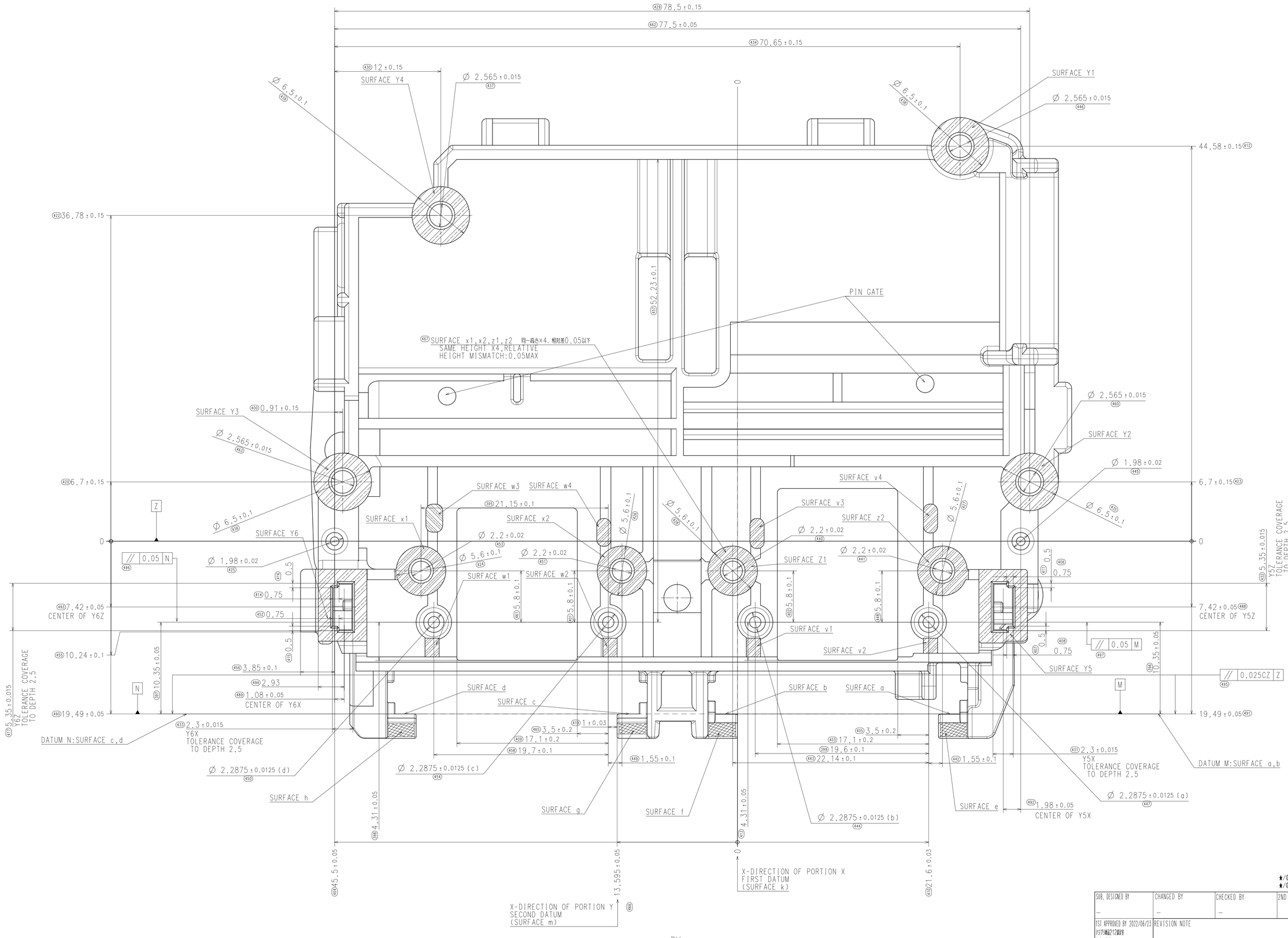

RV
(5:1)

★/@は設変図番を表す
★/@ DENOTES EC PLACE.

SUB. DESIGNED BY	CHANGED BY	CHECKED BY	2ND APPROVED BY
–	–	–	

1ST APPROVED BY 2022/06/23 ﾃｸﾉﾛｼﾞｰ部212部設計 橋本 康人	REVISION NOTE		SCALE 5:1
DESIGNED BY 629-4527 DP-IJD 麻田 翔太	DATE 2022/06/22	REV. 009	CLS. PAGE 2/3
DRAWN BY –	PARTS NO. QC7-6967-000		Canon
	PARTS NAME CR CARRIAGE G226		MAS.

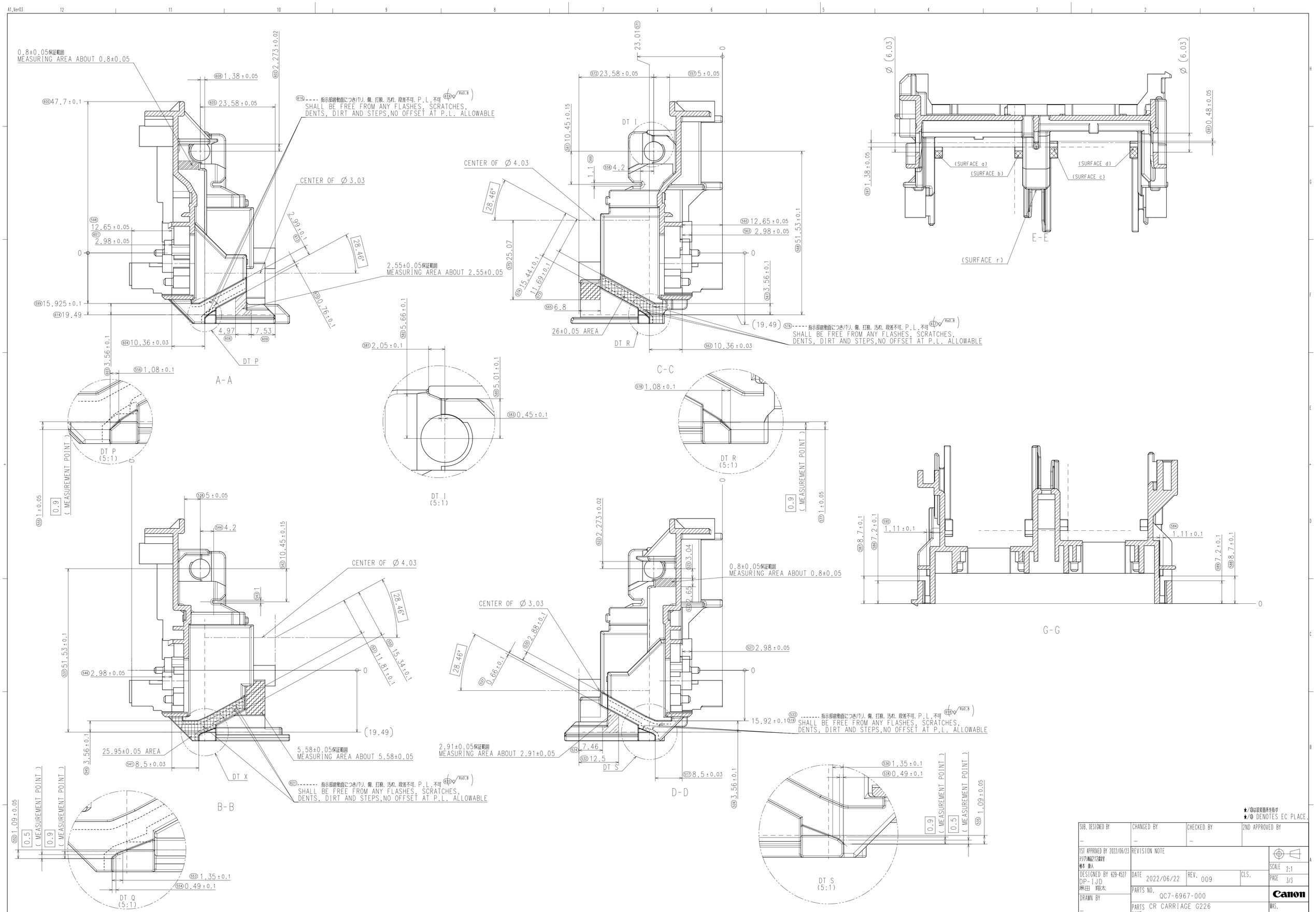

★/Ⓖは設変箇所を表す
★/Ⓖ DENOTES EC PLACE.

SUB. DESIGNED BY	CHANGED BY	CHECKED BY	2ND APPROVED BY
–	–	–	

1ST APPROVED BY 2022/06/23 デジプロ商品212設計 橋本 康人	REVISION NOTE		SCALE 2:1
DESIGNED BY 629-4527 DP-IJD 麻田 翔太	DATE 2022/06/22	REV. 009	CLS. PAGE 3/3
DRAWN BY –	PARTS NO. QC7-6967-000		Canon
	PARTS NAME CR CARRIAGE G226		MAS.