Inf2C - Computer Systems
Lecture 1
Course overview & the big picture

Boris Grot

School of Informatics

University of Edinburgh

Practicalities

- Lectures:
  - Asynchronous
  - Nominally Tue & Fi 15:10 – 16:00 (videos online in advance)
  - Mostly recordings from last year
- Group office hours
  - Twice a week (likely Mon & Thur afternoon)
  - Details TBC
  - Planning to stream live <u>and</u> have it recorded

- Tutorials: weeks 3, 4, 6, 7, 9, 10
  - Some sections will be in-person (hopefully🤞)
  - Will have synchronous online options

Practicalities (con'd)

- Labs: online drop-in format
  - Demonstrators available to help
  - Stay tuned for logistics
- Lab exercises: 3 in total
  - Tools & concepts to help with the coursework
  - Not marked
- Online discussion forum: Piazza
  - http://piazza.com/ed.ac.uk/fall2020/inf2ccs
  - Primary means to Q&A outside of class.

- Study resources: slides, book, lecture notes (online)
- All material are/will be on Learn

Lecture schedule, slides, videos, assignments

Informatics 2C - Introduction to Computer Systems (2020-2021)[SEM1]

Course Information

Syllabus

Course Materials

Discussions (Piazza)

Library Resources

Assessment

Course Contacts

Live Classroom

Have Your Say

Help and Support

Syllabus

Schedule

Week	Date	Subject	Reading*	Tutorial	Lab	Coursework
1	21 Sep					
	22 Sep	Introduction	P&H 1			
	23 Sep					
	24 Sep					
	25 Sep	Data Representation 1	P&H 3/e: 3.1-3.3, 3.6 (up to FP add) P&H 4/e: 2.4, 3.1,3.2, 3.5 (up to FP add) P&H 5/e: 2.4, 3.1,3.2, 3.5 (up to FP add)			
2	28 Sep					
	29 Sep	Data Representation 2	As previous lecture			
	30 Sep					
	1 Oct					
	2 Oct	MIPS ISA 1	P&H 3/e: 2.1-2.9, A.1-6, A.9 P&H 4/e: 2.1-2.8, B.1-6, B.9 P&H 5/e: 2.1-2.8, A.1-6, A.9		Lab 1: Intro to MIPS and MARS IDE Source files	
	5 Oct			Tutorial 1		

Books

- **Required:** *Patterson & Hennessy: Computer Organization and Design, Morgan Kaufmann*
  - 5th or 4th ed recommended
  - Several copies on reserve in the library
  - Digital copies online through the library DiscoverEd
- *Silberschatz, Galvin, Gagne: Operating Systems Concepts, Wiley 9th ed*
  - Library has 9th and 7th editions (both OK)
  - Only a few sections needed for this course
- *Kernighan and Ritchie. The C Programming Language, Prentice Hall 2nd ed*
  - Generally useful, but not mandatory for this course

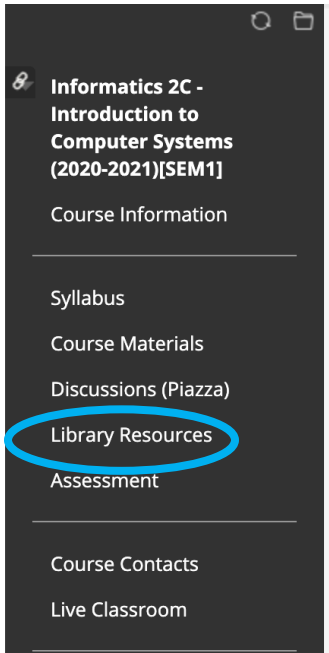

Assessment

- Quizzes - 40%
  - 3-4 quizzes throughout the semester
  - Online
- Courseworks – 60%
  - 3 programming assignments
  - Tentative dates on the Syllabus page

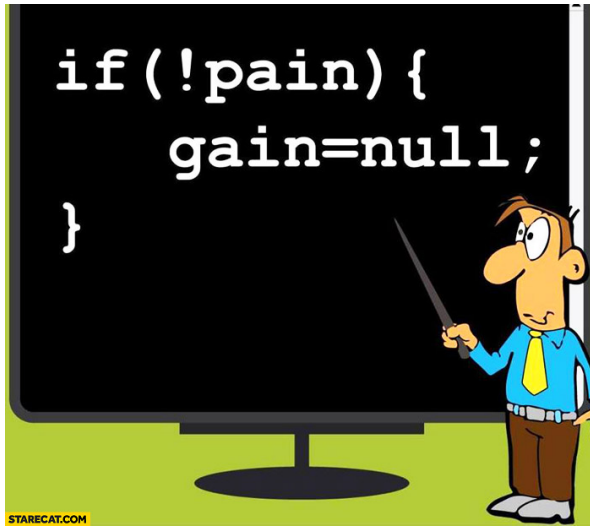

Must achieve at least 40% in total to pass the course

Late coursework

Policy differs from the rest of Informatics

- **Not accepted** unless exceptional circu
- If you have a **really good reason** to submit late, contact the ITO
  - The ITO will log the report and pass it on to the UG2 Course/Year Organiser (Dr. Rik Sarkar)
  - Only in exceptional circumstances (*e.g.*, serious illness), would an extension be granted after the deadline has passed
- Further info and extension request form: http://web.inf.ed.ac.uk/infweb/student-services/ito/admin/coursework-projects/late-coursework-extension-requests

What is "good reason"?

Something that, in the judgement of the member of staff responsible, would prevent a competent, well-organised, conscientious student from being able to submit on time.

Examples:

- Significant illness
- Serious personal problems

Non-examples:

- Difficult cluster of deadlines
- Last-minute computer problems, dog ate your homework, …

Academic Misconduct (aka Cheating)

- How cheating is defined in this co
  - Any similarity in the submitted cou
- How we check for cheating:
  - Pairwise comparisons between all submissions
  - Two comparison tools: a commercial tool and an internal one
    - Rely on sophisticated "fingerprinting" techniques that are rename and reorder proof
- I have a solid track record of hunting down cheaters
  - Will go to great lengths to prosecute to the max extent

<u>DON'T</u> DO IT!!!

How to do well in this class

- Get started on assignments early
  - They are intended to be work-intensive
- Take advantage of labs
  - But don't wait till the last day → demonstrators will be swamped and will not have time for all
- Don't ignore tutorials
  - Advance prep will allow you to focus on nuances
- Keep up with the reading and the lectures
- Don't cheat/plagiarise

The Team

Dr. Boris Grot: course organizer

Dr. Aaron Smith: courseworks czar

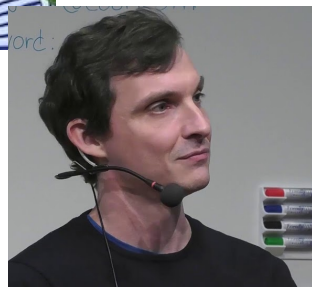

Dr. Tobias Grosser: labs czar

TAs: David, Dmitrii, Siavash

Tutors, Demonstrators, Markers

WELL, ENOUGH ABOUT ME! SHALL WE ORDER?
ZZZZZ
DINING ROOM IS CLOSED

Riddle of the Day

I am very easy to get into,
but it is hard to get out of me.

What am I?

So what is this course about?

Syllabus Overview

- Hardware:
  - Data representation and operations
  - Design of (very) simple circuits
  - Processor organisation
  - The memory subsystem
  - Input/Output (I/O)
  - Exceptions and interrupts
- Software:
  - Low-level (assembly) programming
  - C programming
  - Operating systems basics

Let's dig in…

Evolution of computers

- Early computers had their programs set up by plugging cables and setting switches
- John von Neumann first proposed to store the program in the computer's memory
- All computers since then (~1945) are stored-program machines

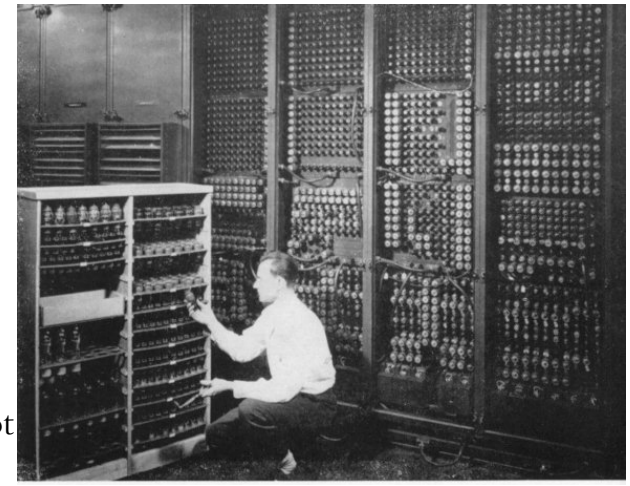

Evolution of computers

num

l thei

ogy p

e bip

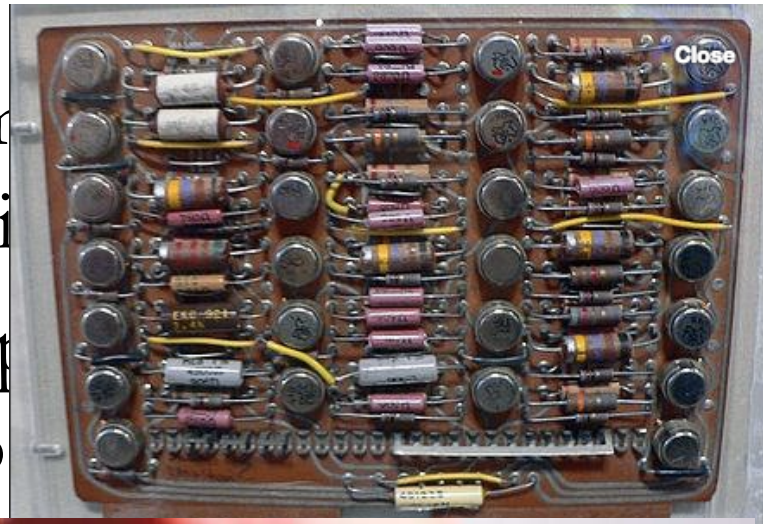

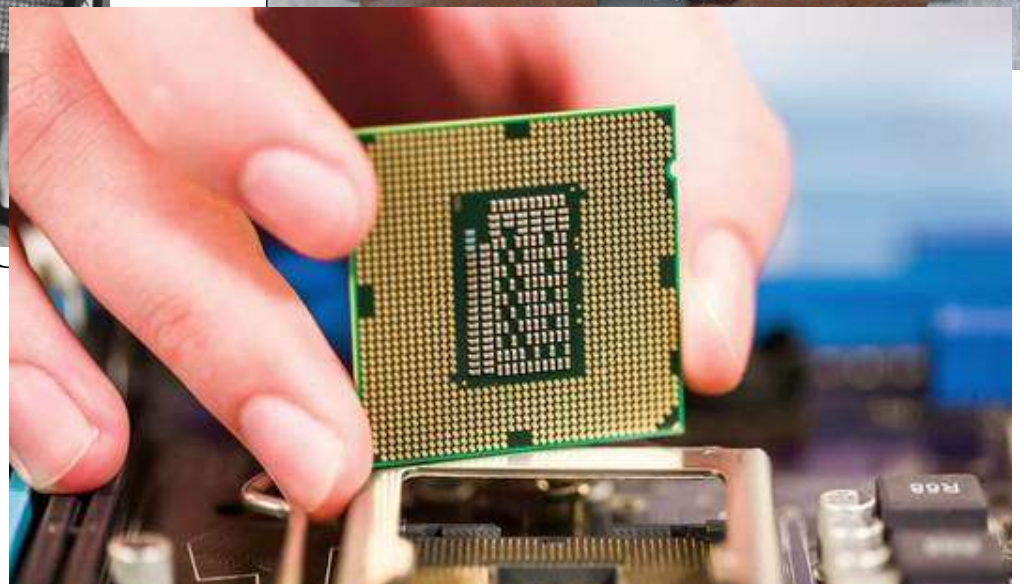

Evolution of computers

- What has changed is the number of transistors (electronic switches) and their speed
- Implementation technology progressed from vacuum tubes to discrete bipolar transistors to (eventually) Integrated Circuits (a.k.a. chips) made with complementary metal-oxide semiconductor (CMOS) technology.
- At the same time, the cost per transistor has been dropping

Moore's law

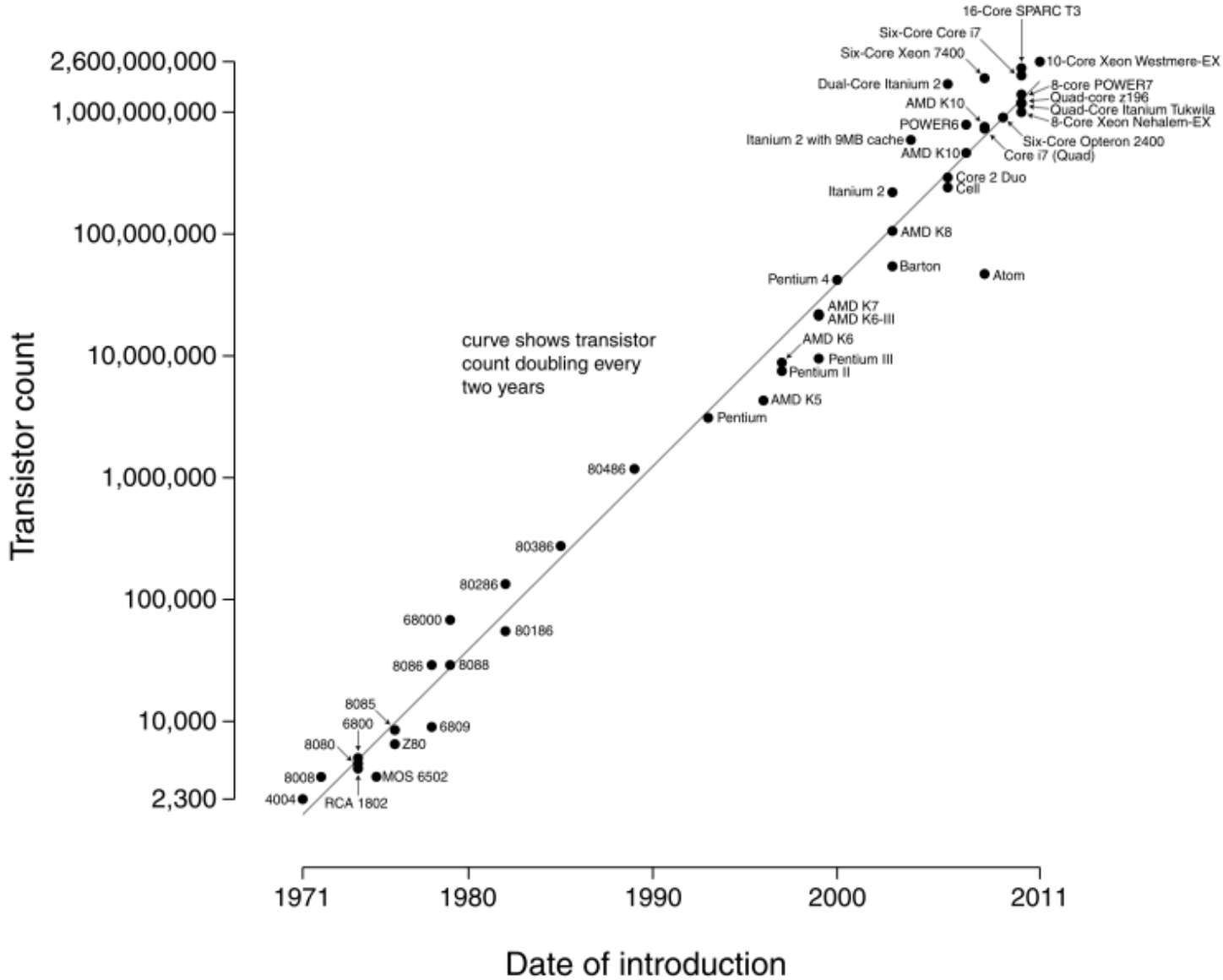
16-Core SPARC T3
Six-Core Core i7
Six-Core Xeon 7400
10-Core Xeon Westmere-EX
Dual-Core Itanium 2
8-core POWER7
Quad-core z196
Quad-Core Itanium Tukwila
8-Core Xeon Nehalem-EX
AMD K10
POWER6
Itanium 2 with 9MB cache
Six-Core Opteron 2400
AMD K10
Core i7 (Quad)
Core 2 Duo
Cell
Itanium 2
AMD K8
Barton
Atom
Pentium 4
AMD K7
AMD K6-III
AMD K6
Pentium III
Pentium II
AMD K5
Pentium
80486
80386
80286
68000
80186
8086
8088
8085
6800
6809
8080
Z80
8008
MOS 6502
4004
RCA 1802
curve shows transistor count doubling every two years
Transistor count
2,600,000,000
1,000,000,000
100,000,000
10,000,000
1,000,000
100,000
10,000
2,300
1971
1980
1990
2000
2011
Date of introduction

Moore's law

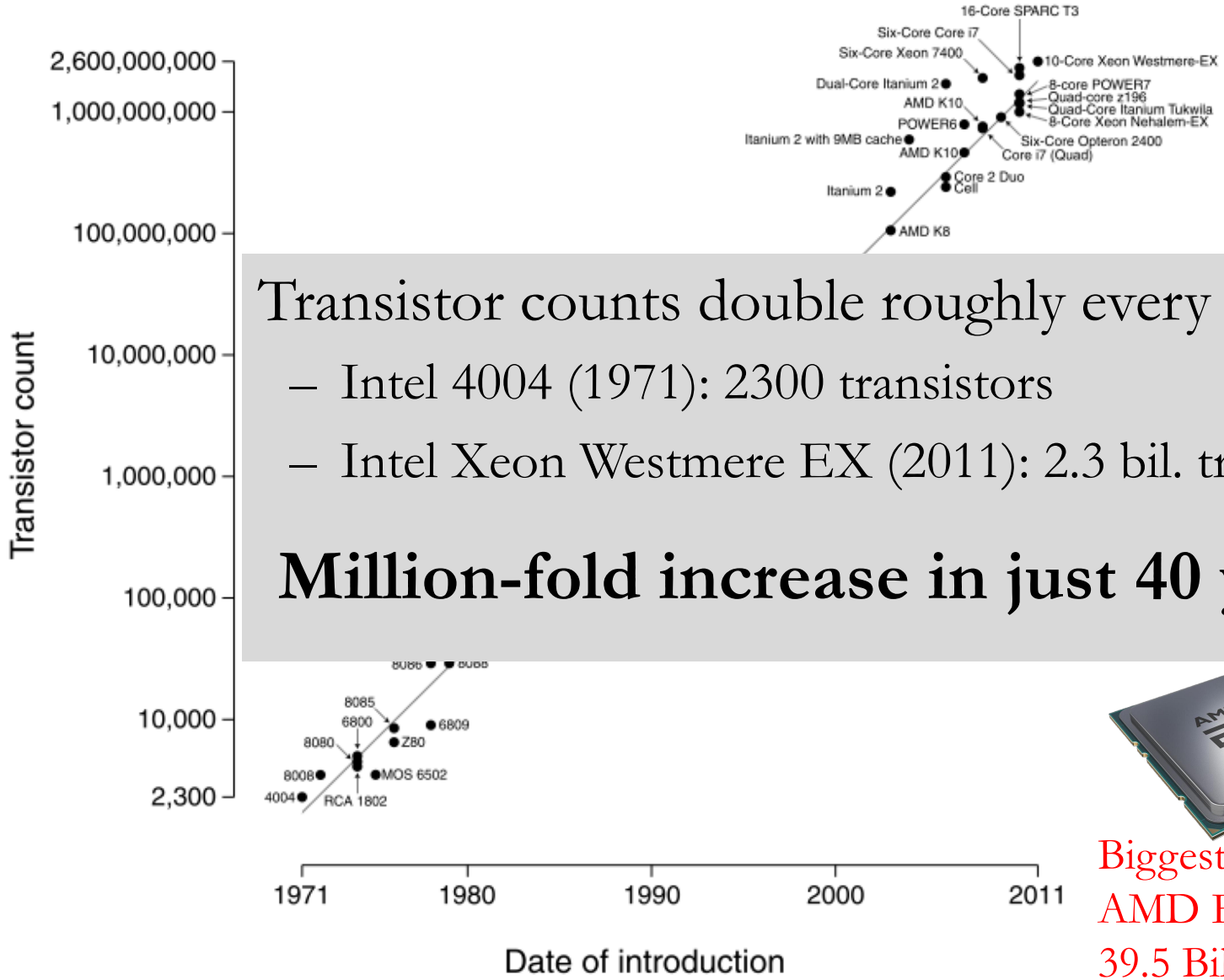

Transistor counts double roughly every 2 years

- Intel 4004 (1971): 2300 transistors
- Intel Xeon Westmere EX (2011): 2.3 bil. transistors

Million-fold increase in just 40 years!

Biggest CPU today:
AMD Epyc Rome
39.5 Bil transistors

Types of computer systems

- Servers
  - Used for either few large tasks (e.g., engineering apps), or many small tasks (e.g., web server, Google)
  - Fast processors, lots of memory
  - Multi-user, multi-program

- Personal computers
  - Laptops, desktops
  - Balance cost, processing power
  - Few users, multi-program

Types of computer systems (con'd)

- Mobile devices
  - Smart phones, tablets
  - Highly integrated (multiple processors, GPU, GPS, media accelerators, etc), low-power
  - Single-user, multi-program

- Embedded:
  - Task specific: sensing, control, media playback, etc.
  - Low-cost, low-power
  - Single program

Which computer system category is the largest?

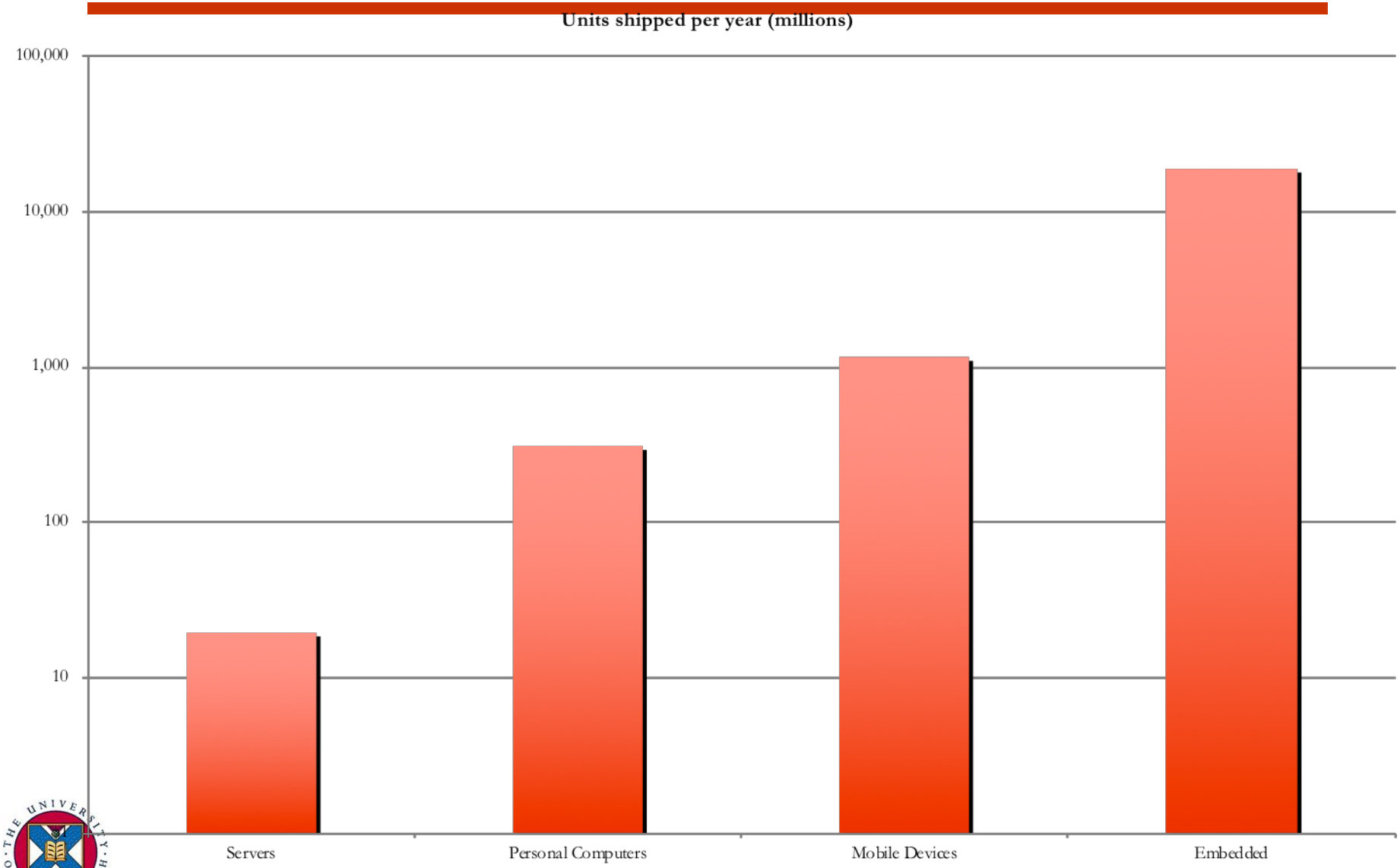

Computer components

- Data path
  - Performs actual operations on data
- Control path
  - Fetches instructions from program in memory
  - Controls the flow of data through the data path

} Processor

- Memory
  - Stores data and instructions
- Input/Output
  - Interfaces with other devices for getting/giving data

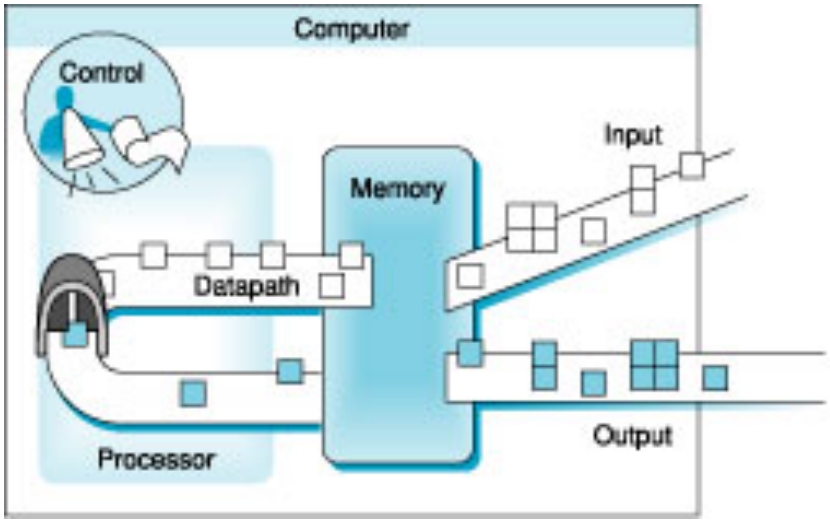

A modern processor

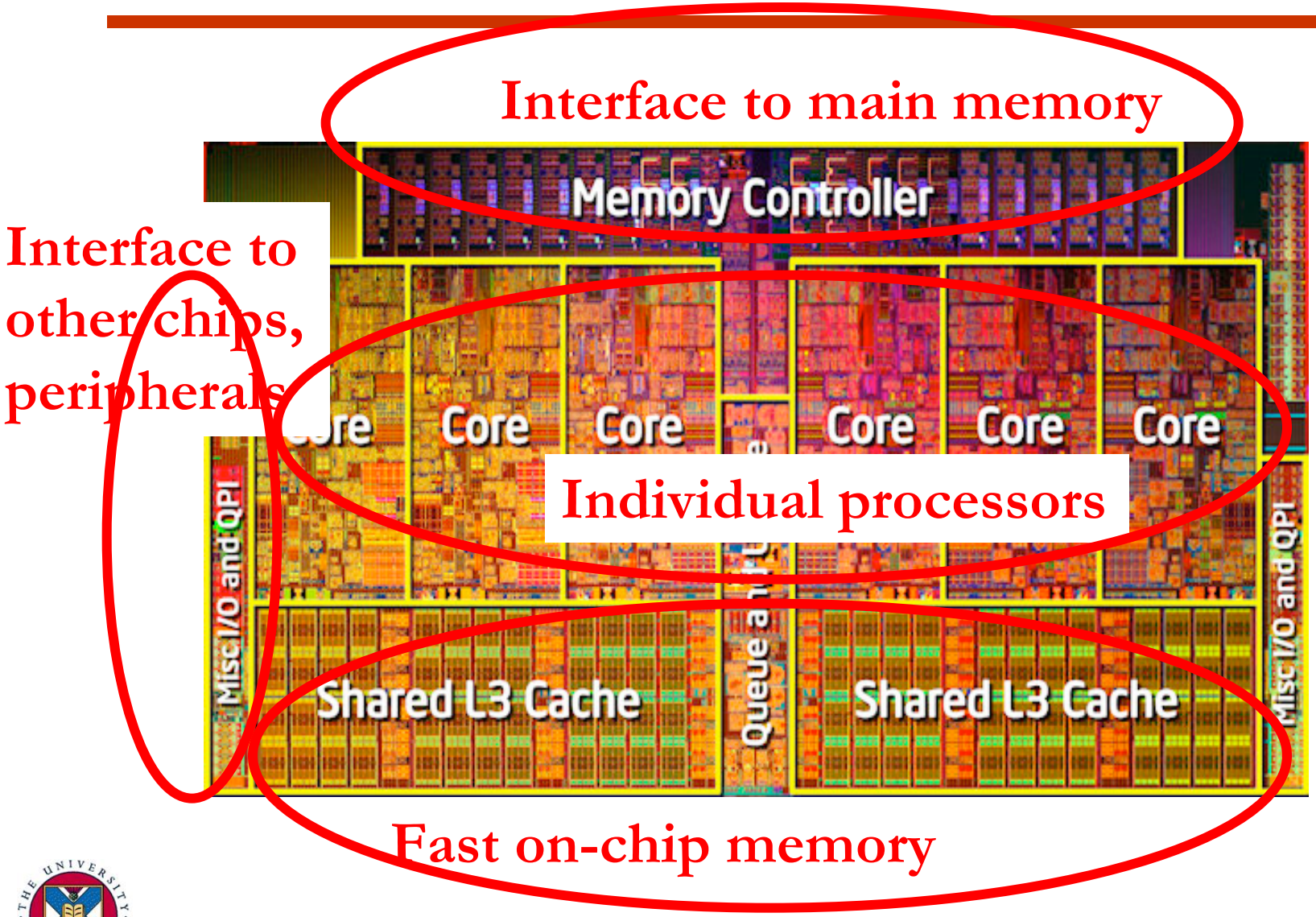

Modern computer system

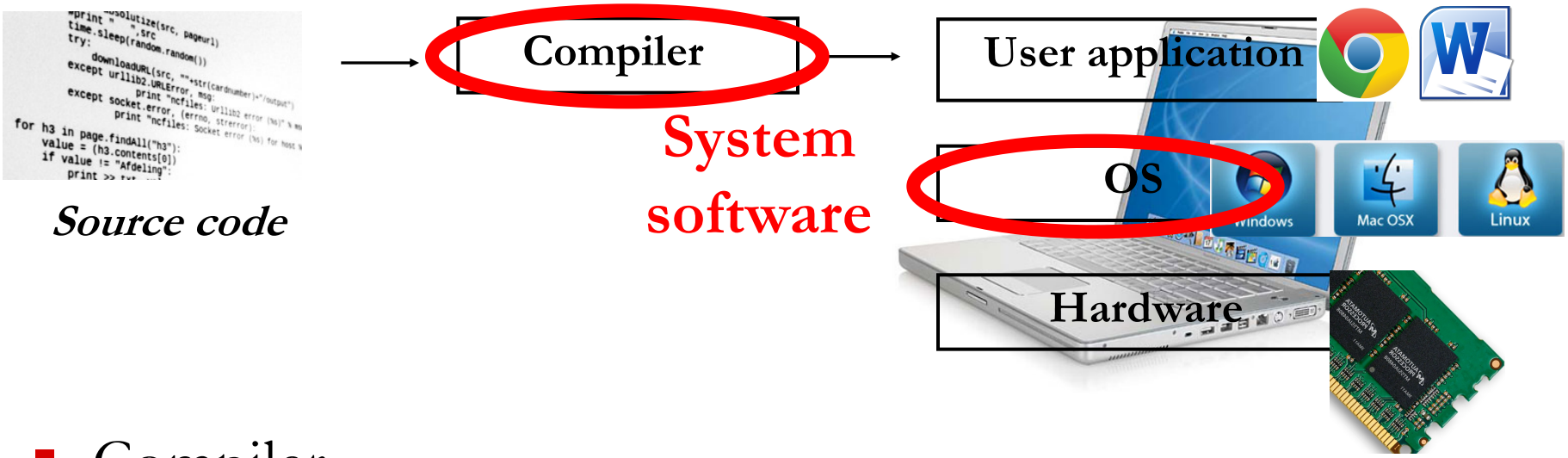

- Compiler
  - Translates **High Level Language** (**HLL**) into **machine language** or **byte code**
- Operating System (OS)
  - Mediates access to hardware resources (CPU, Memory, I/O)
  - Schedules applications

Words of wisdom & caution

- This class covers a lot of material
  - Keeping up will require effort on your part
  - This ain't no INF1!
- Follow all lectures and participate in tutorials
- Get started on assignments early
  - They are meant to be work-intensive
- ASK QUESTIONS!

Reward: you will learn a lot!