A Deformable Crawler Based on Watt Chain

1. **Description of program**

A deformable crawler based on Watt's linkages, advancing through caterpillar crawling and rolling motions, and featuring environmental adaptability, mobility, as well as multi-terrain movement.

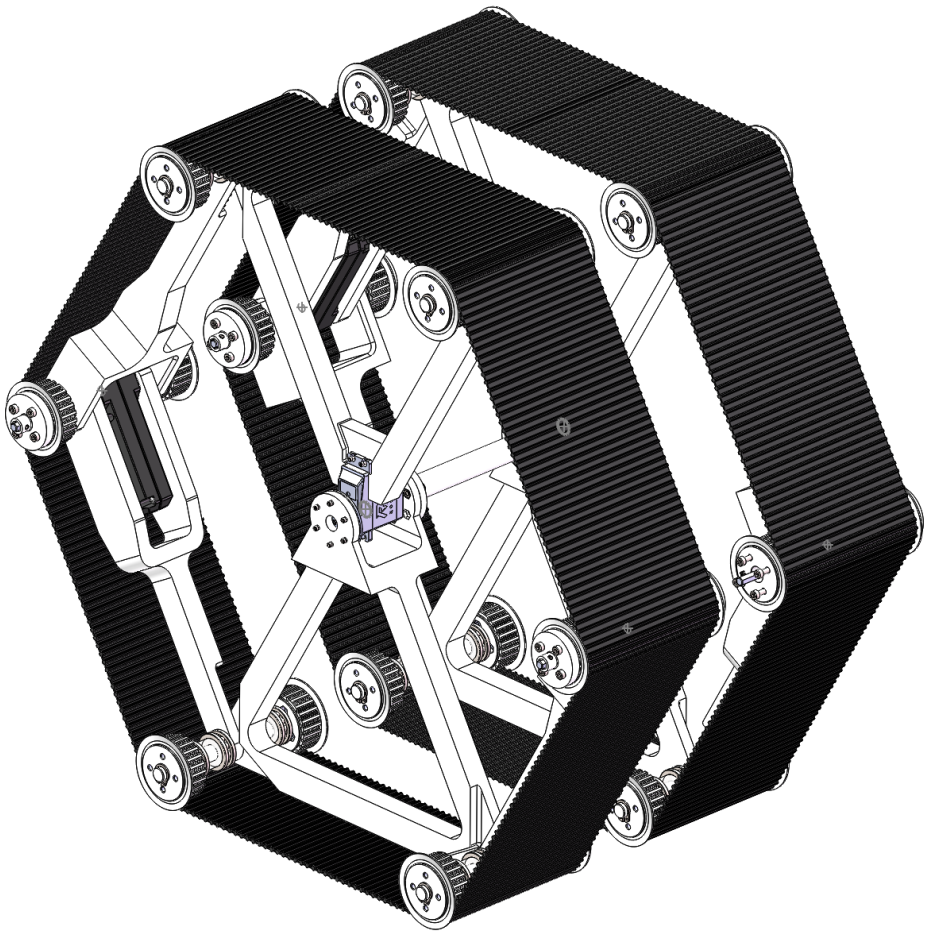

Prototype

2. **Structural features**

1. A deformable crawler based on Watt's linkages has two motions: caterpillar crawling and rolling.

2. For obstacle crossing, it can adjust the contacting angle of the caterpillar and obstacles by deforming to increase stability.

3. For ditch crossing, it can add the size of ditch crossing by deforming.

4. In the case of muddy skidding and other caterpillar failures, it can roll only by deforming.

5. Diversion can be realized by the velocity difference between left and right chains.

6. Caterpillar motion and rolling motion can be conducted simultaneously to increase the maximum moving speed.

3. Sketch map with labels

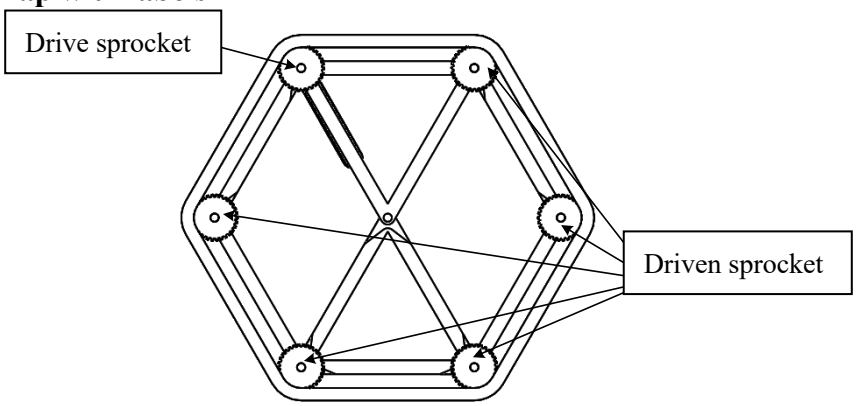

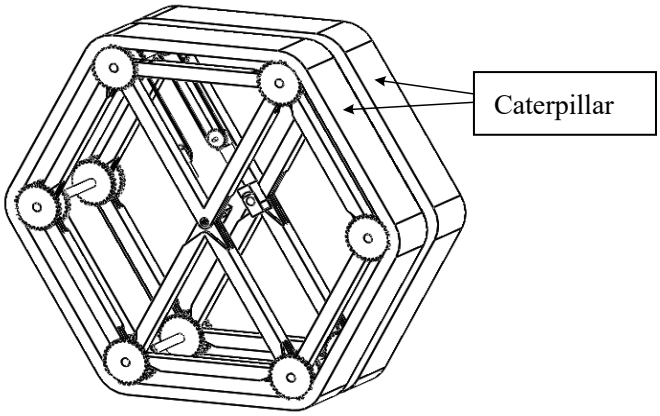

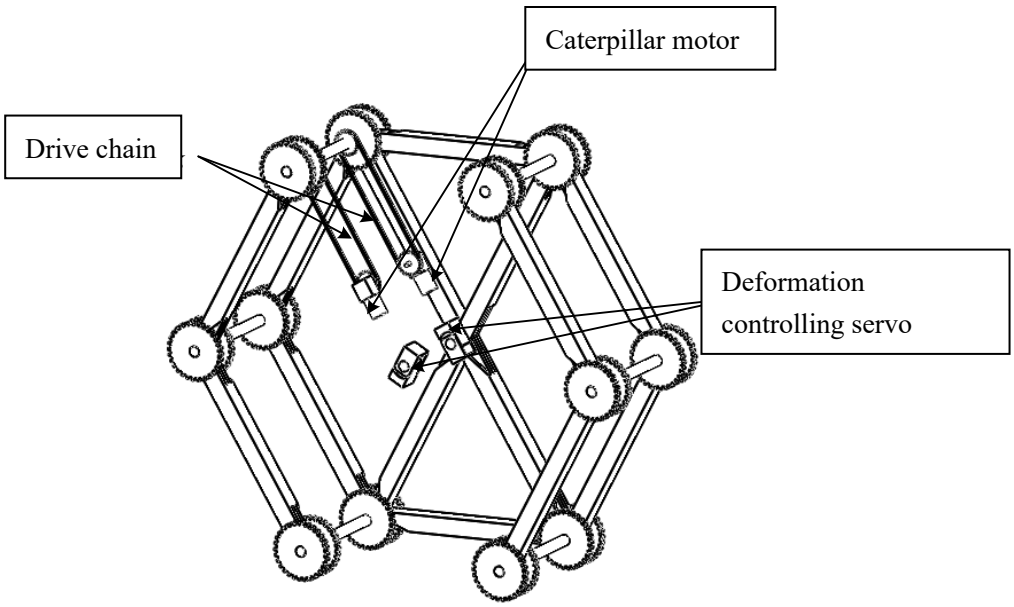
Caterpillar motor
Drive chain
Deformation controlling servo

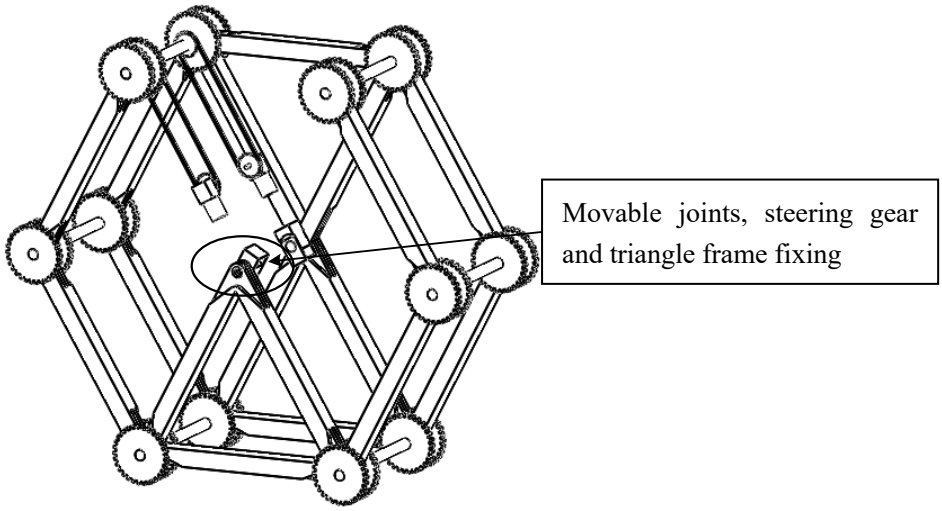
Movable joints, steering gear and triangle frame fixing

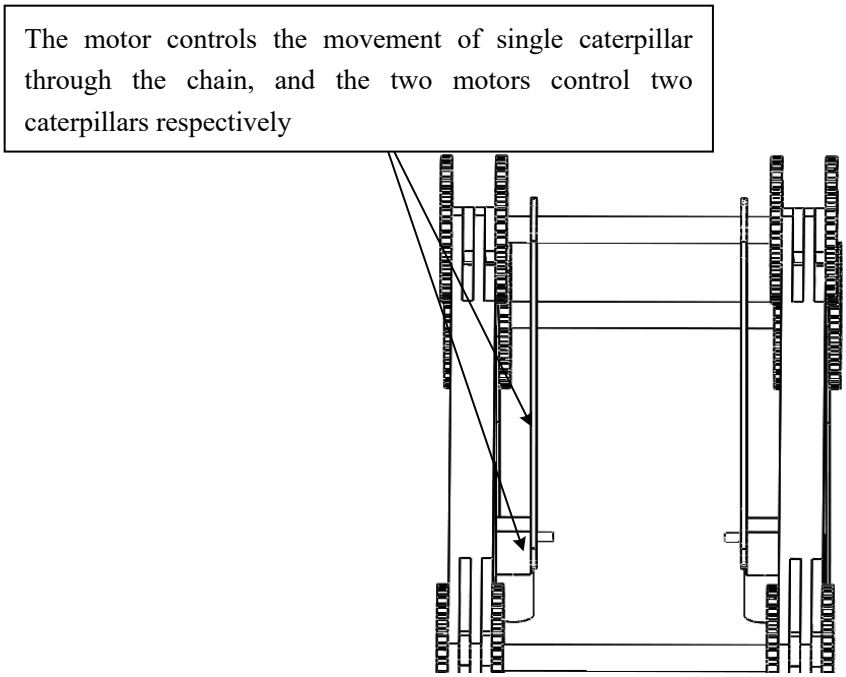
The motor controls the movement of single caterpillar through the chain, and the two motors control two caterpillars respectively

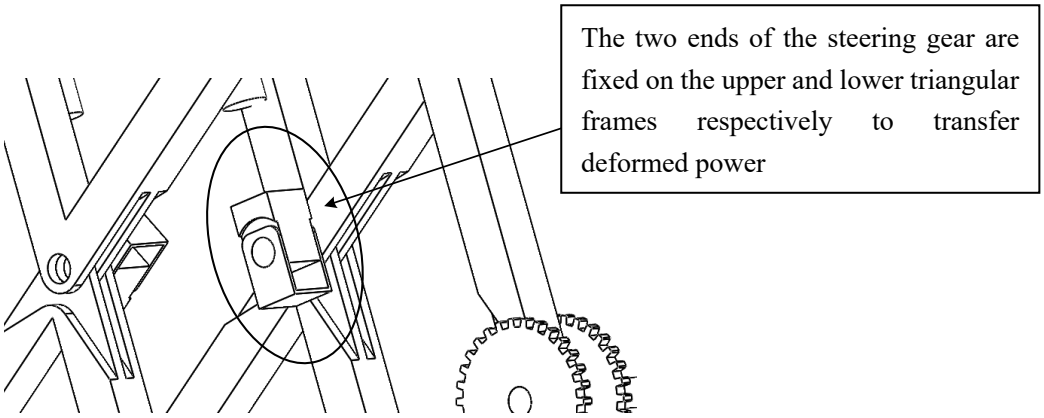

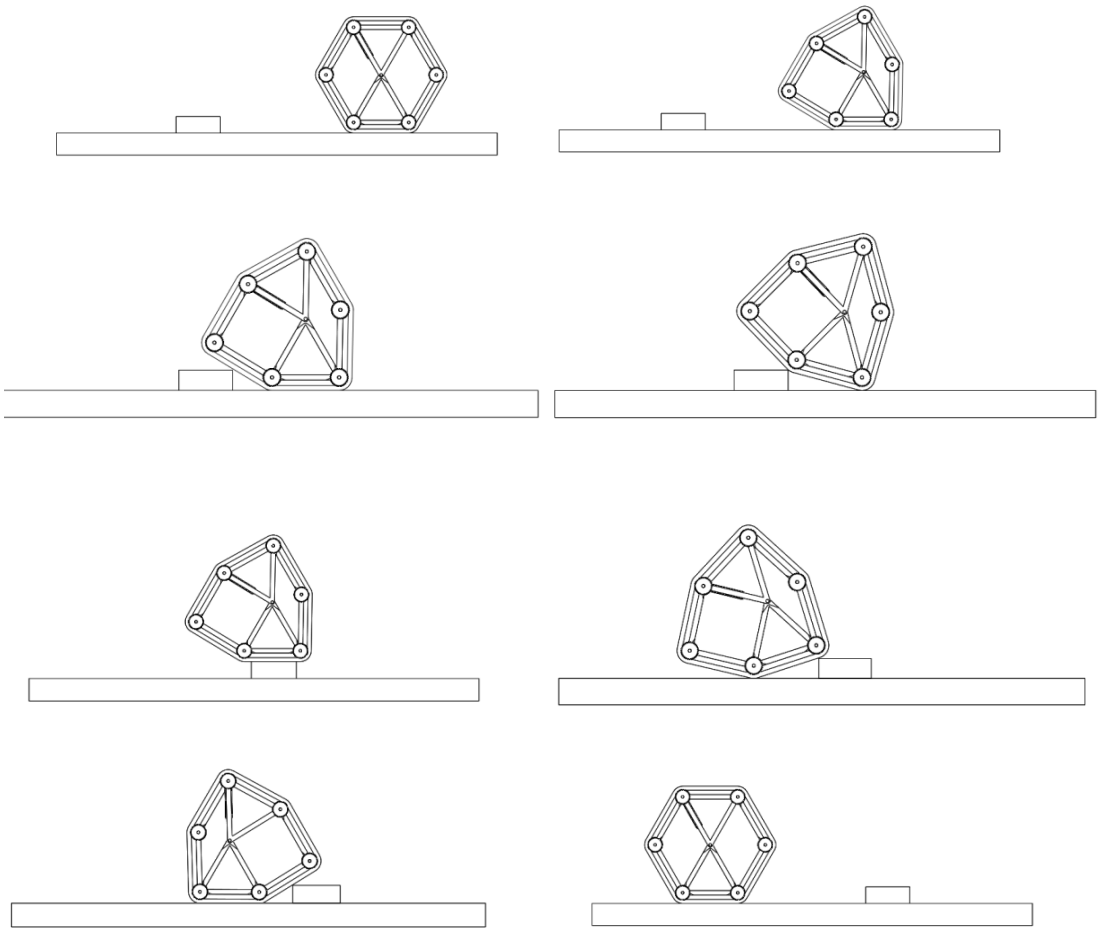

Schematic Diagram of Obstacle Crossing
(Simulated with Adams)

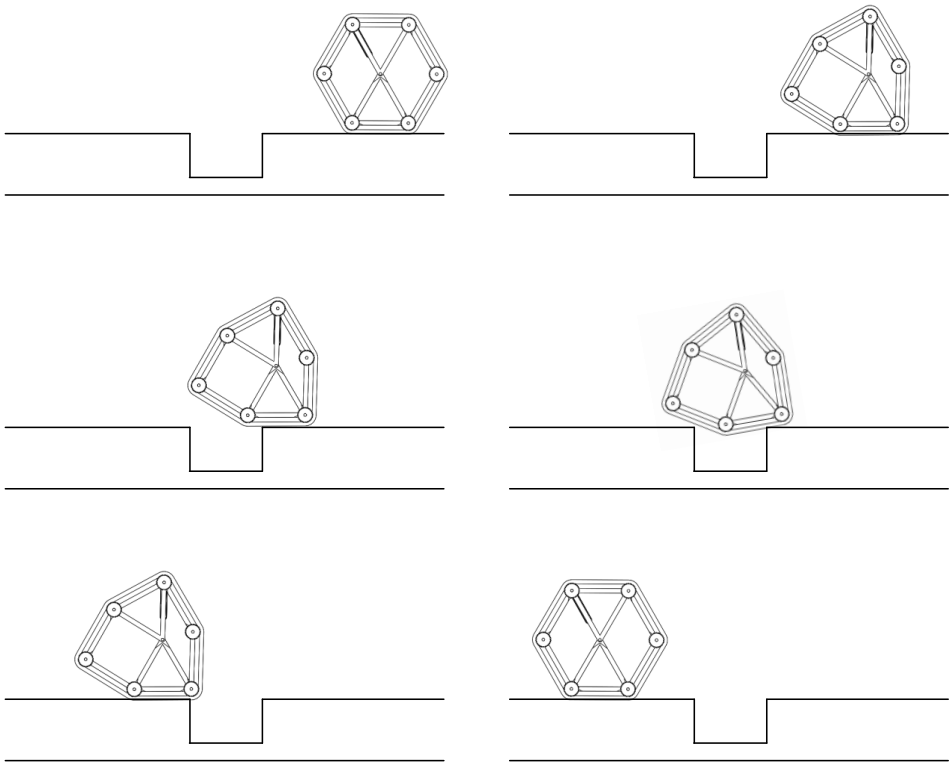

Schematic Diagram of Ditch Crossing
(Simulated with Adams)

4. Components (prototype-optimized from the sketch)

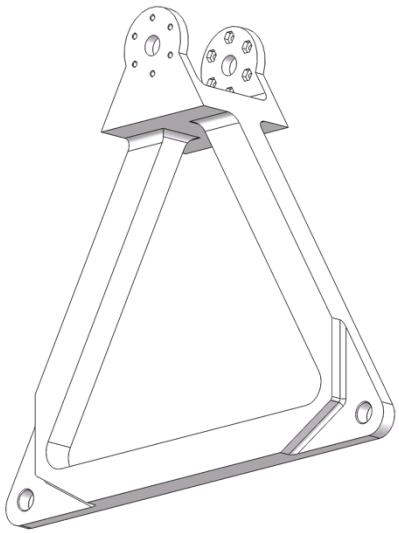

Triangle frame 1

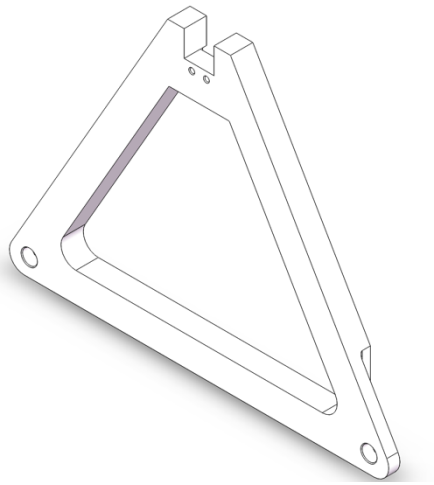

Triangle frame 2

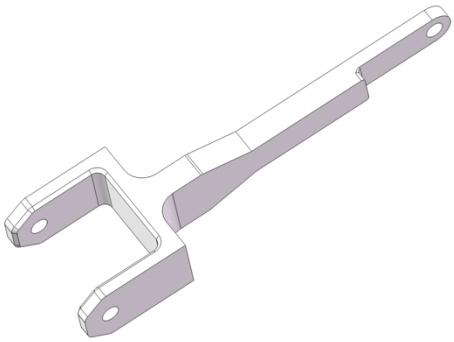

Beam 1

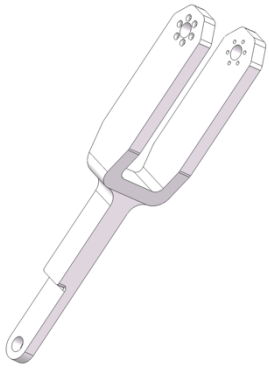

Beam 2

Axis

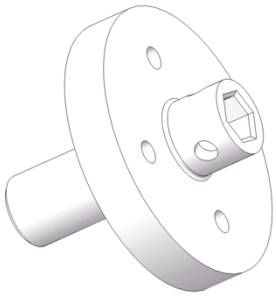

Flange plate

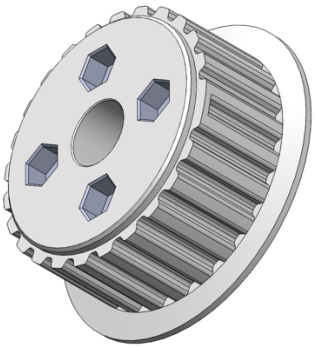

Crawler wheel

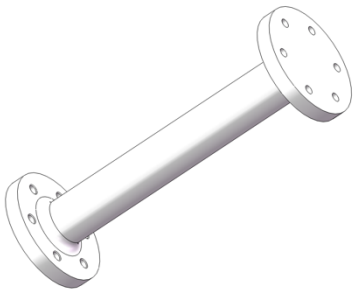

Connective axis

Crawler

Deformation controlling servo

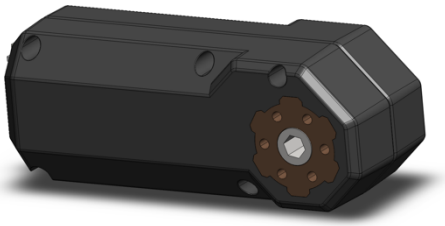

Caterpillar motor

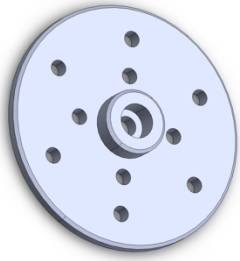

Servo output panel