US011234567B2

(12) **United States Patent**
Thorne et al.

(10) **Patent No.: US 11,234,567 B2**
(45) **Date of Patent: Feb. 1, 2022**

(54) **VACUUM CLEANER TOOL HAVING A ROTATABLE DUCT FOR MOVING BETWEEN A USE POSITION AND STORAGE POSITION ON A VACUUM CLEANER**

(71) Applicant: **SharkNinja Operating, LLC**, Needham, MA (US)

(72) Inventors: **Jason B. Thorne**, Dover, MA (US); **Alexander Calvino**, Cranston, RI (US); **Mingshun Su**, Suzhou (CN); **Robert Yang**, Suzhou (CN); **Charlie Cai**, Wuhan (CN); **Gordon Howes**, Suzhou (CN); **Brian M. Bond**, Woburn, MA (US); **Leanna Cornelius**, Acton, MA (US)

(73) Assignee: **SharkNinja Operating LLC**, Needham, MA (US)

(*) Notice: Subject to any disclaimer, the term of this patent is extended or adjusted under 35 U.S.C. 154(b) by 297 days.

(21) Appl. No.: **16/117,894**

(22) Filed: **Aug. 30, 2018**

(65) **Prior Publication Data**

US 2019/0069740 A1 Mar. 7, 2019

Related U.S. Application Data

(60) Provisional application No. 62/553,247, filed on Sep. 1, 2017.

(51) **Int. Cl.**
A47L 9/00 (2006.01)
A47L 9/04 (2006.01)
(Continued)

(52) **U.S. Cl.**
CPC ***A47L 9/0027*** (2013.01); ***A47L 5/30*** (2013.01); ***A47L 9/0072*** (2013.01);
(Continued)

(58) **Field of Classification Search**
CPC A47L 5/30; A47L 9/0027; A47L 9/0072; A47L 9/0411; A47L 9/0477; A47L 9/246
See application file for complete search history.

(56) **References Cited**

U.S. PATENT DOCUMENTS

4,776,059 A * 10/1988 Worwag A47L 9/02 15/331
5,046,218 A * 9/1991 Cerri A47L 9/06 15/416

(Continued)

FOREIGN PATENT DOCUMENTS

CN 1212143 A * 3/1999
CN 1212143 A 3/1999
JP S63222721 A 9/1988

OTHER PUBLICATIONS

PCT Search Report and Written Opinion dated Nov. 1, 2018, received in corresponding PCT Application No. PCT/US18/48858, 11 pgs.

(Continued)

Primary Examiner — Marc Carlson
(74) *Attorney, Agent, or Firm* — Grossman Tucker Perreault & Pfleger, PLLC

(57) **ABSTRACT**

A vacuum cleaner tool having a brush head, a rotatable duct, and a hinge. The rotatable duct is configured to receive a hose or wand and rotates about the hinge relative to the brush head, between a use position and storage position. In a storage position, the rotatable duct extends generally parallel, or in-line with the brush head and, in a use position, the rotatable duct extends generally perpendicular to the brush head. The vacuum cleaner tool may removably attach to the vacuum cleaner via a release on one end of the brush head interacting with a fixed catch on the vacuum cleaner.

19 Claims, 14 Drawing Sheets

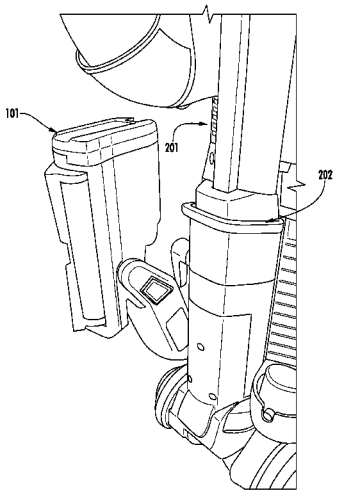

(51) **Int. Cl.**
A47L 9/24 (2006.01)
A47L 5/30 (2006.01)

(52) **U.S. Cl.**
CPC ***A47L 9/0411*** (2013.01); ***A47L 9/0477*** (2013.01); ***A47L 9/246*** (2013.01)

(56) **References Cited**

U.S. PATENT DOCUMENTS

2003/0217431 A1* 11/2003 Uratani A47L 9/066 15/328
2004/0205925 A1* 10/2004 Shanor A47L 9/0018 15/323
2005/0081327 A1* 4/2005 Lim A47L 9/02 15/415.1
2005/0120512 A1* 6/2005 Choi A47L 9/02 15/415.1
2009/0217483 A1* 9/2009 Lee A47L 5/28 15/414
2010/0319158 A1* 12/2010 Ashbee A47L 9/02 15/415.1
2011/0005028 A1* 1/2011 Lee A47L 5/32 15/363
2012/0151713 A1* 6/2012 Krebs A47L 9/02 15/415.1
2012/0216364 A1* 8/2012 Muhlenkamp A47L 9/0054 15/327.1
2016/0157687 A1* 6/2016 Perez A47L 5/28 15/331

OTHER PUBLICATIONS

Chinese Office Action with translation dated Jul. 15, 2020, received in Chinese Patent Application No. 201811013425.0, 13 pgs.
Australian Examination Report dated Jan. 27, 2021, received in Australian Patent Application No. 2018326611, 4 pages.
Chinese Office Action with English translation dated Feb. 19, 2021, received in CN 2018-11013425.0, 6 pgs.
Canadian Office Action dated Apr. 12, 2021, received in Canadian Patent Application No. 3,074,500, 6 pages.
European Search Report dated Apr. 30, 2021, received in European Patent Application No. 18851391.5, 7 pages.

* cited by examiner

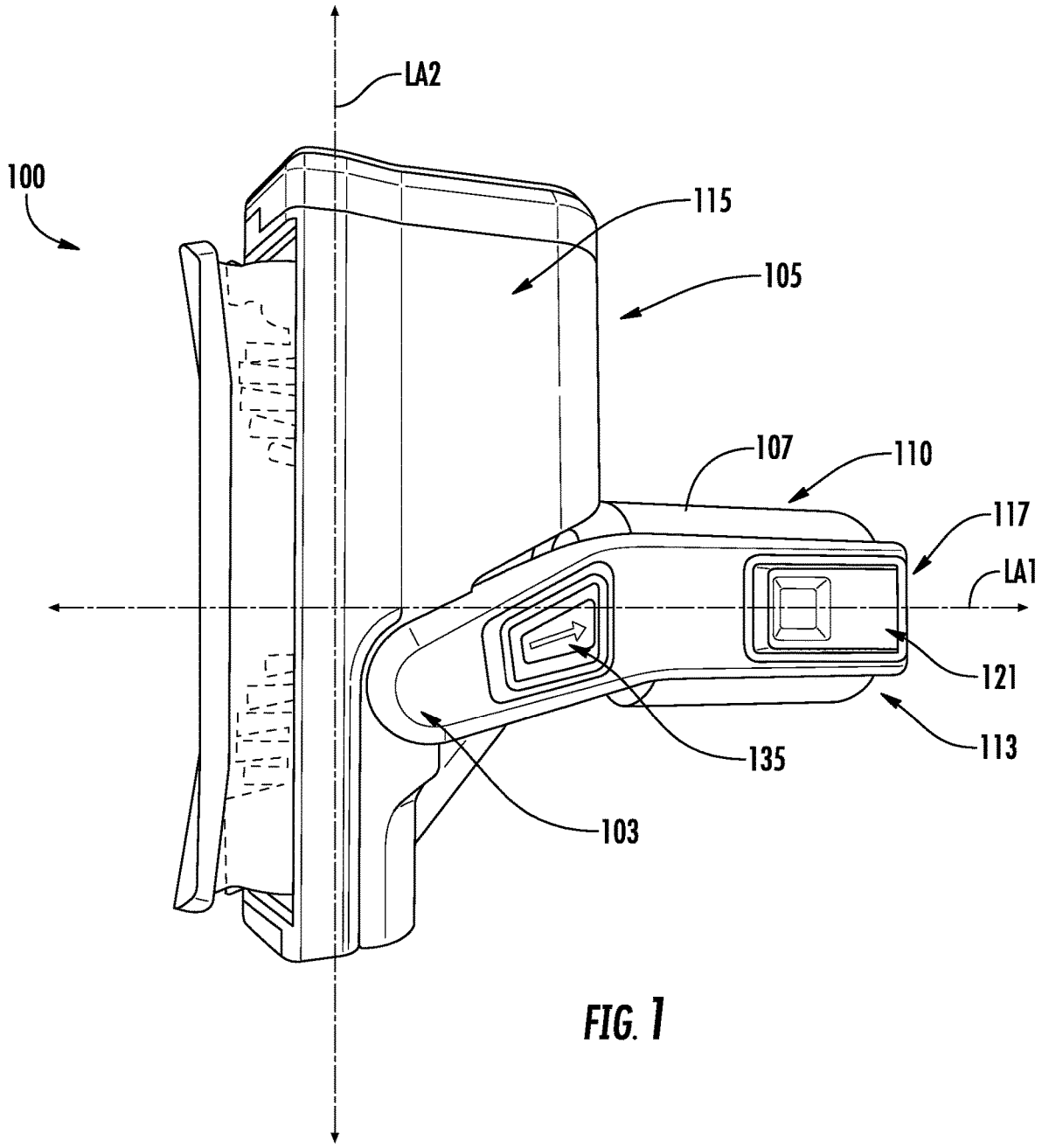

FIG. 1

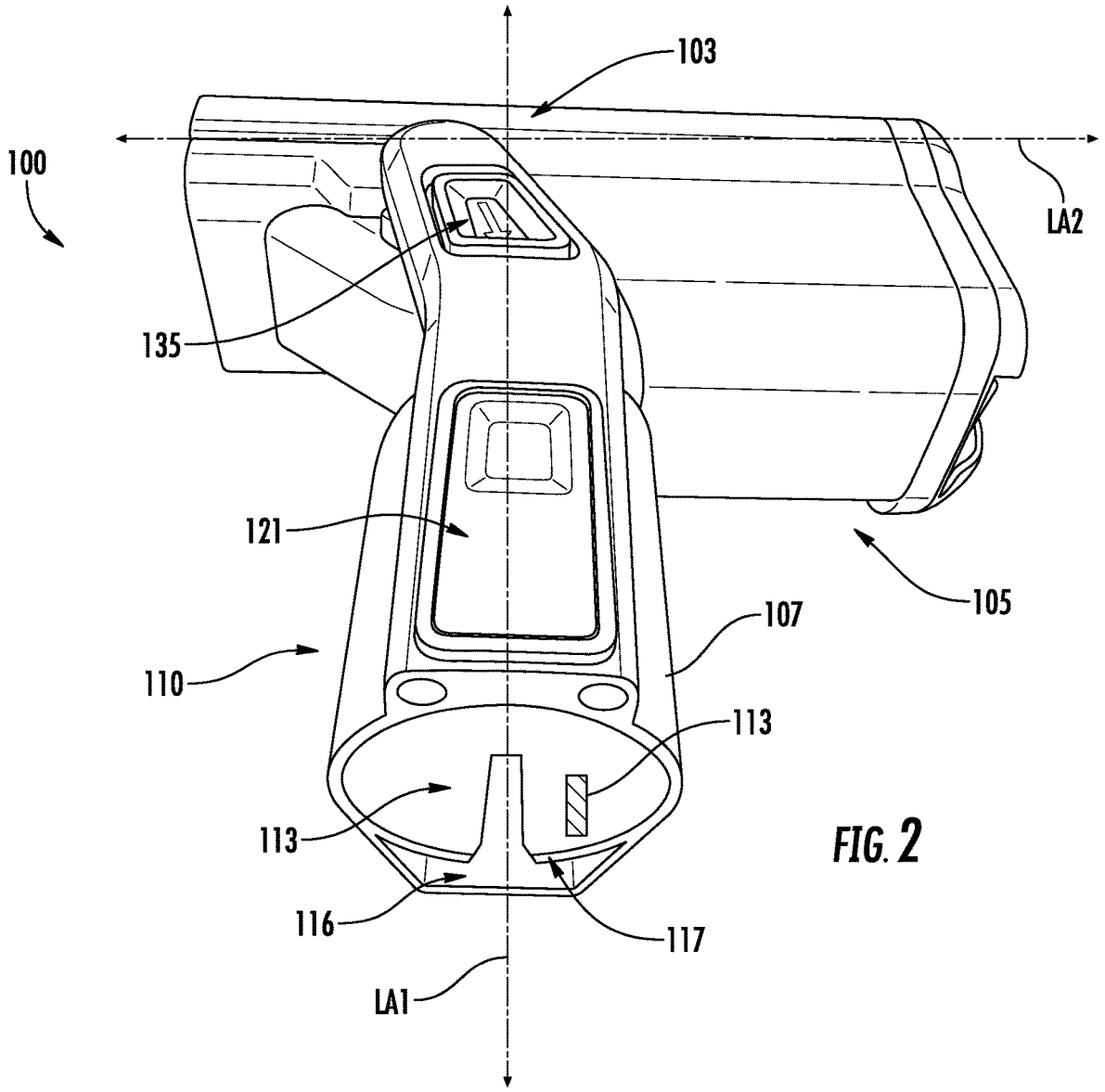

FIG. 2

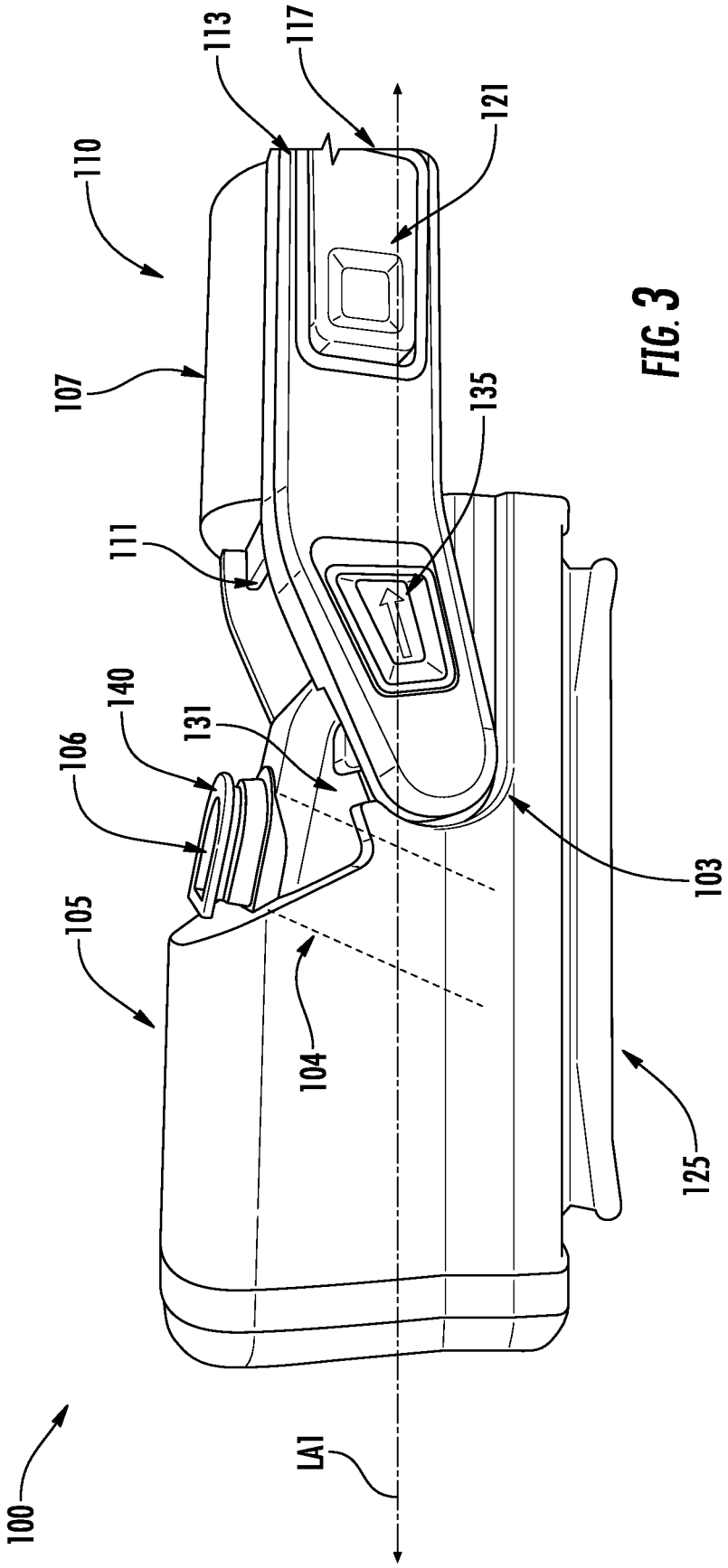

FIG. 3

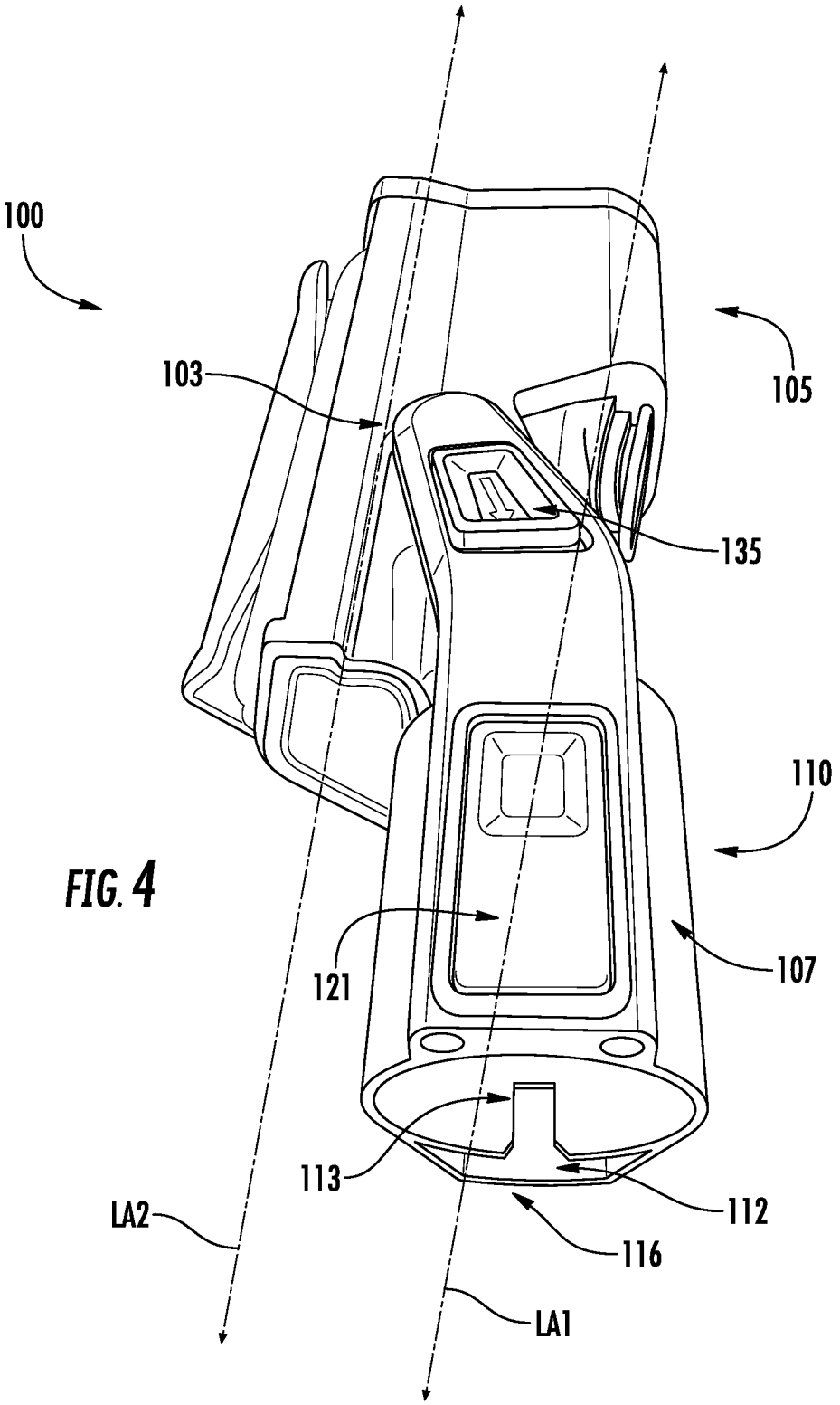

FIG. 4

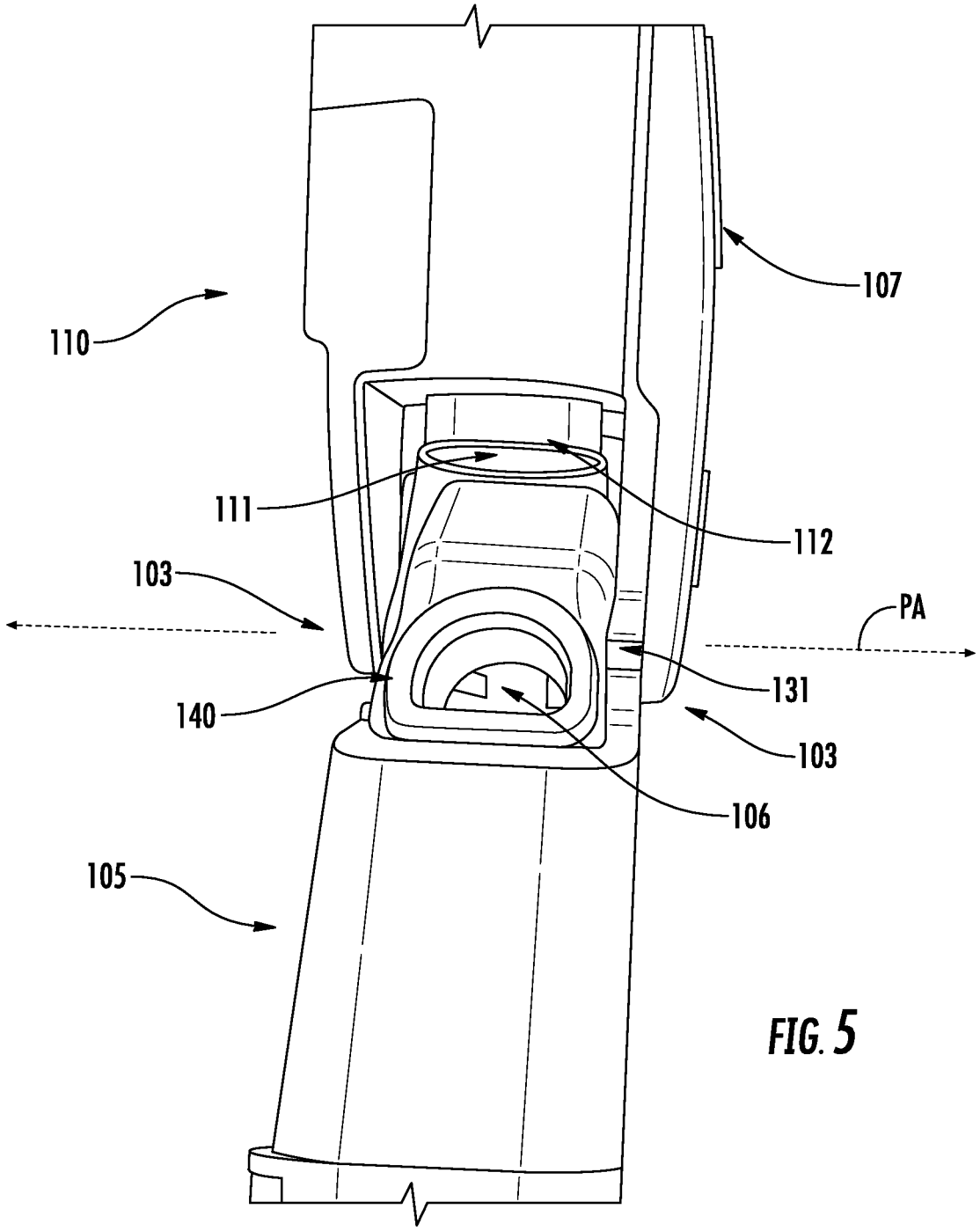

FIG. 5

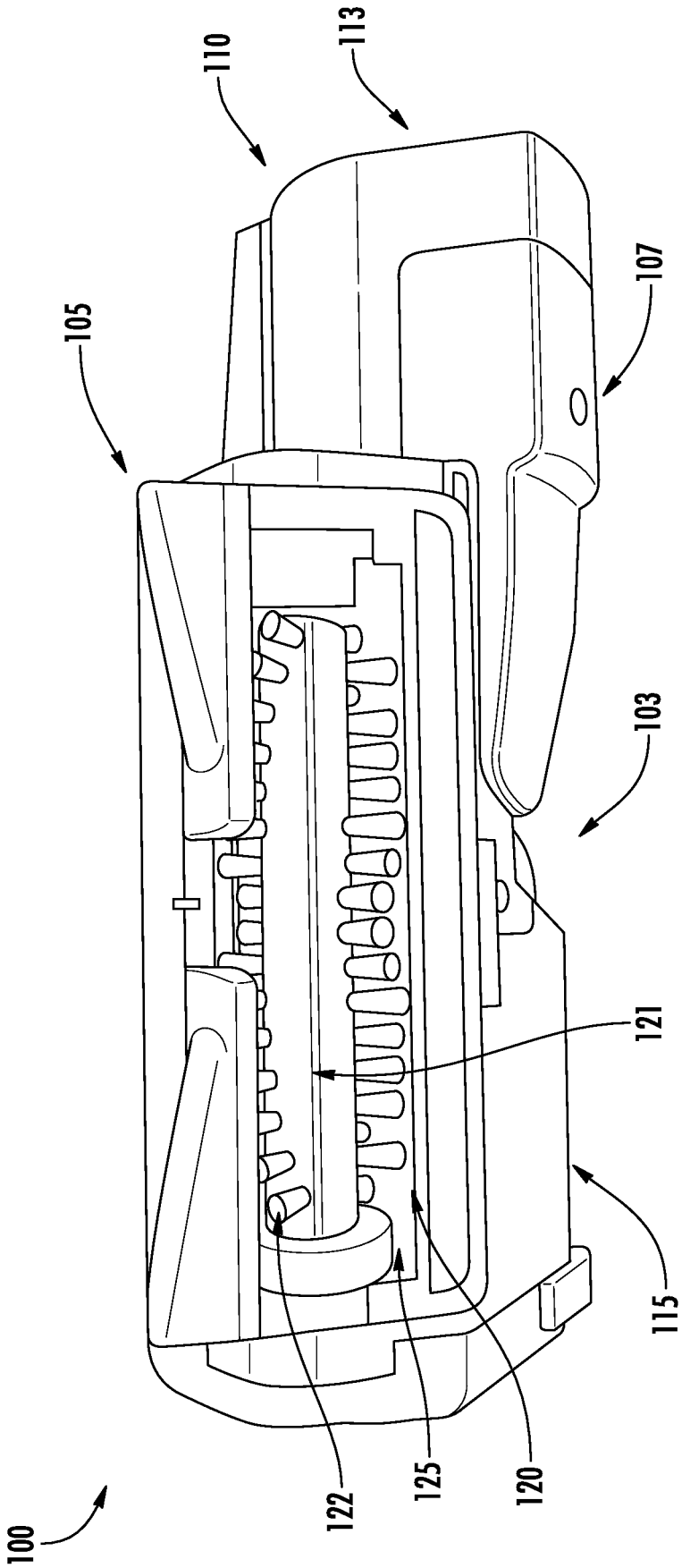

FIG. 6

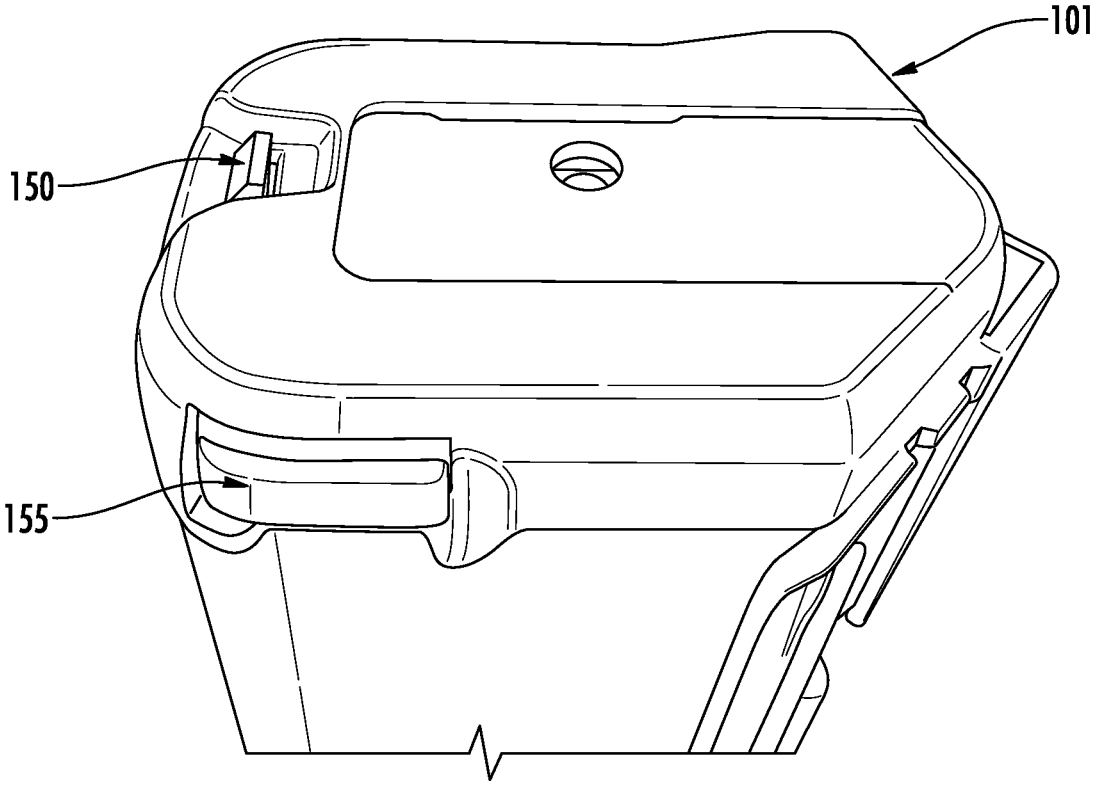

FIG. 7

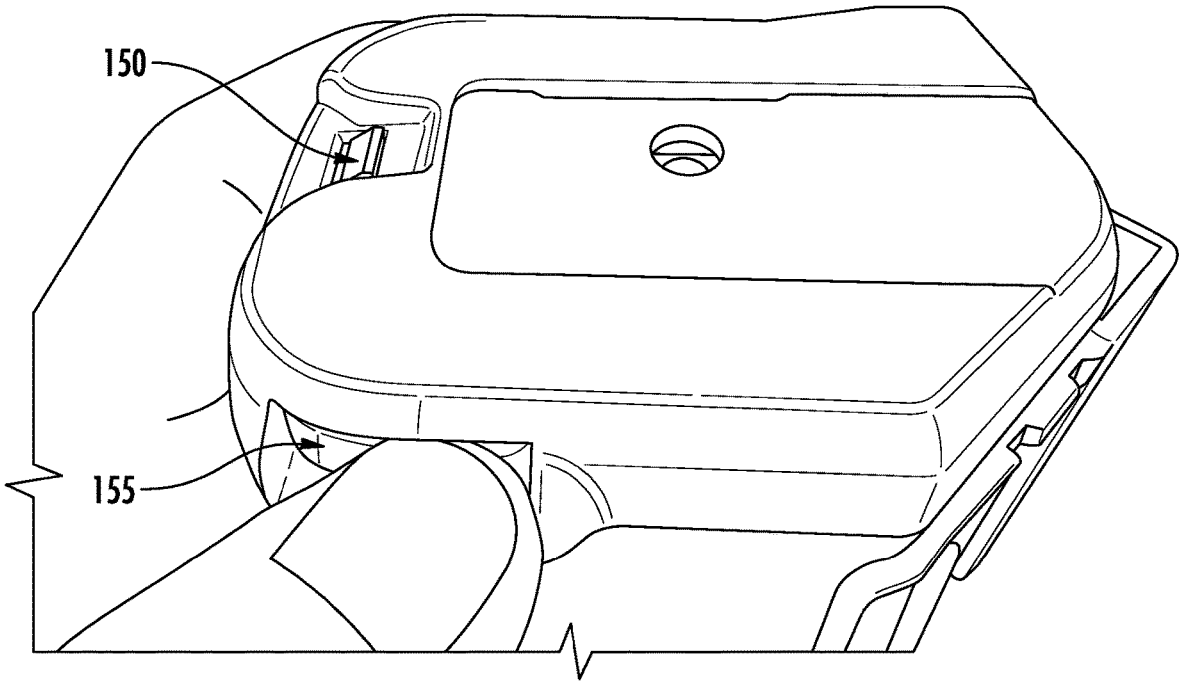

FIG. 8

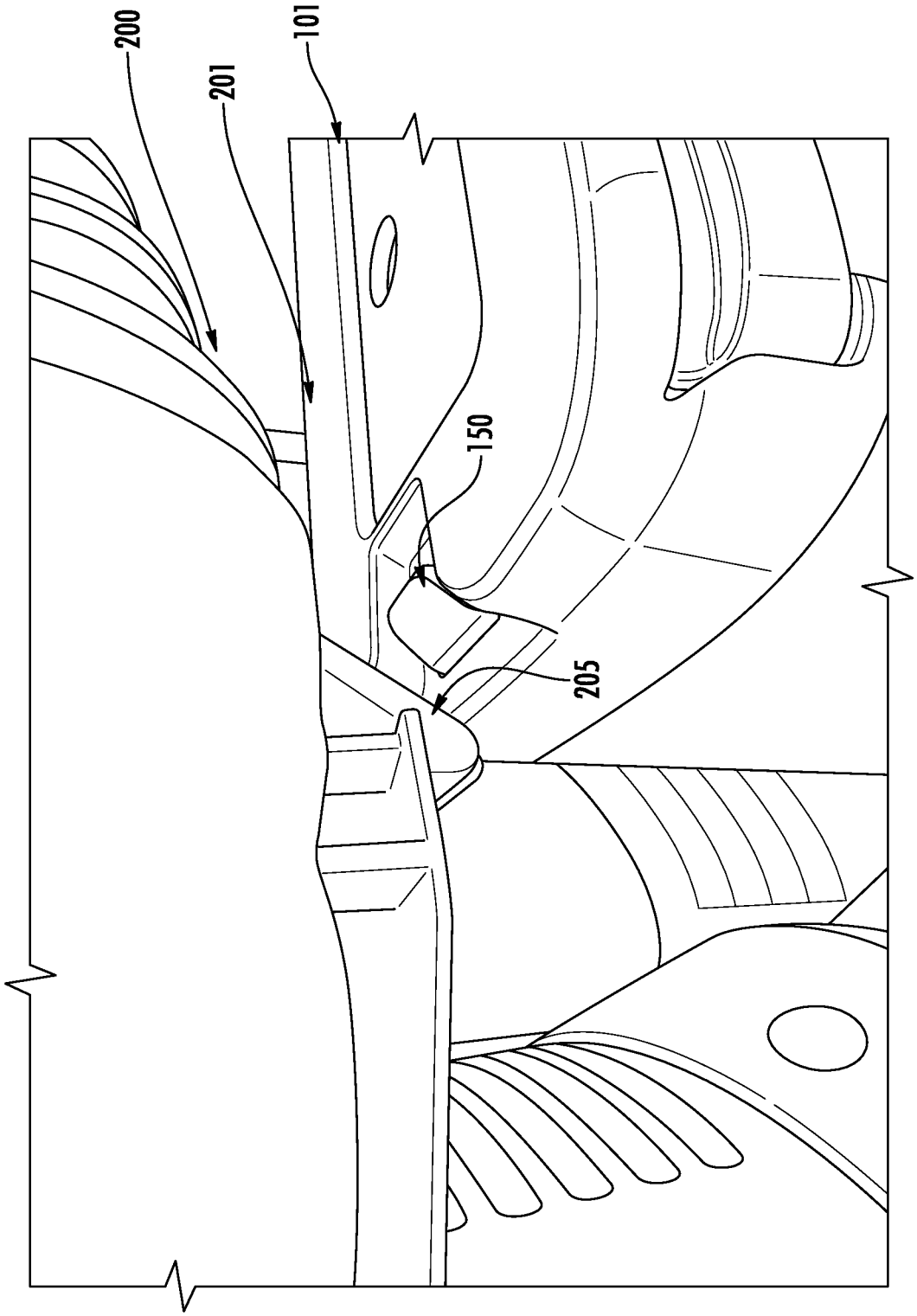

FIG. 9

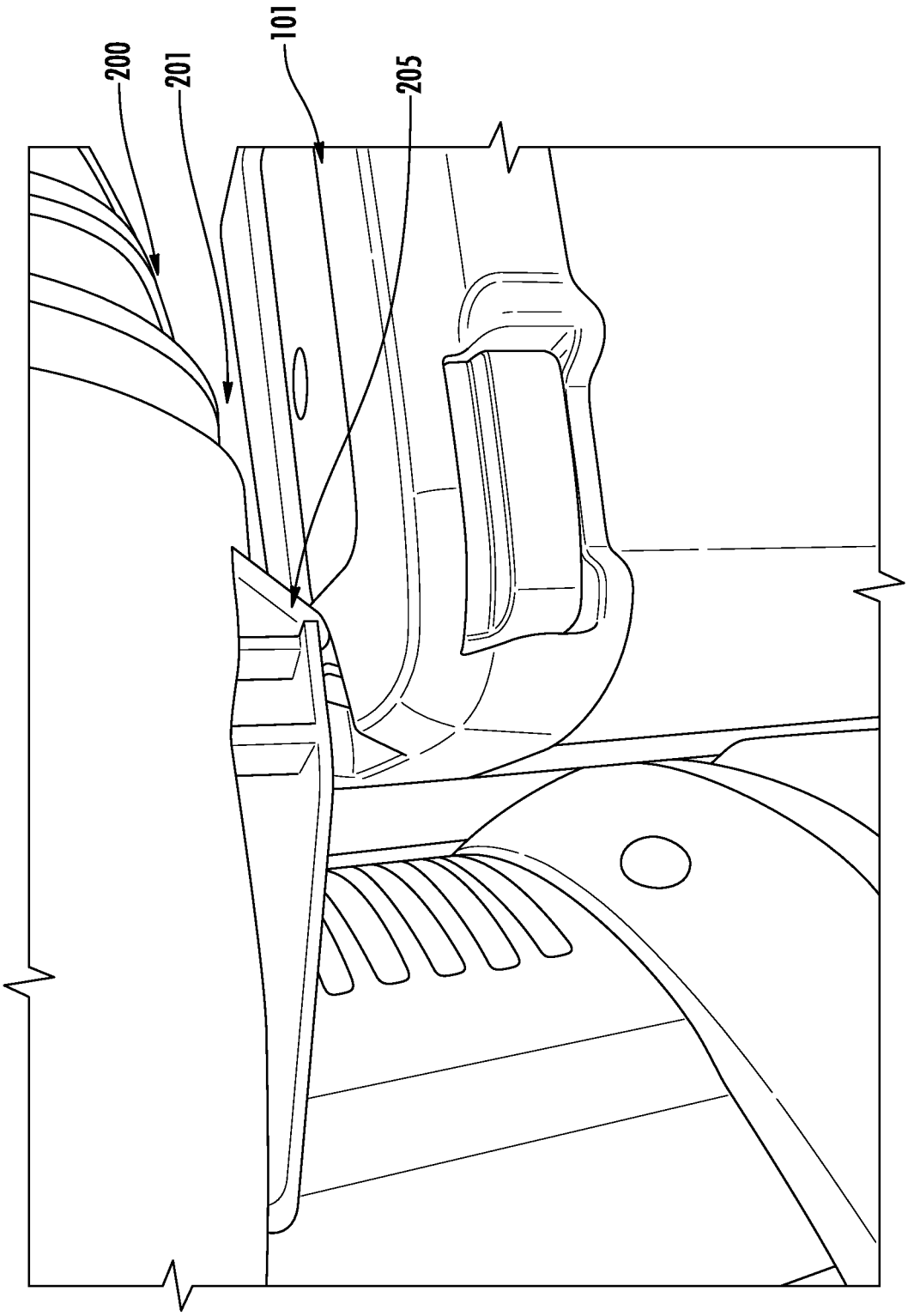

FIG. 10

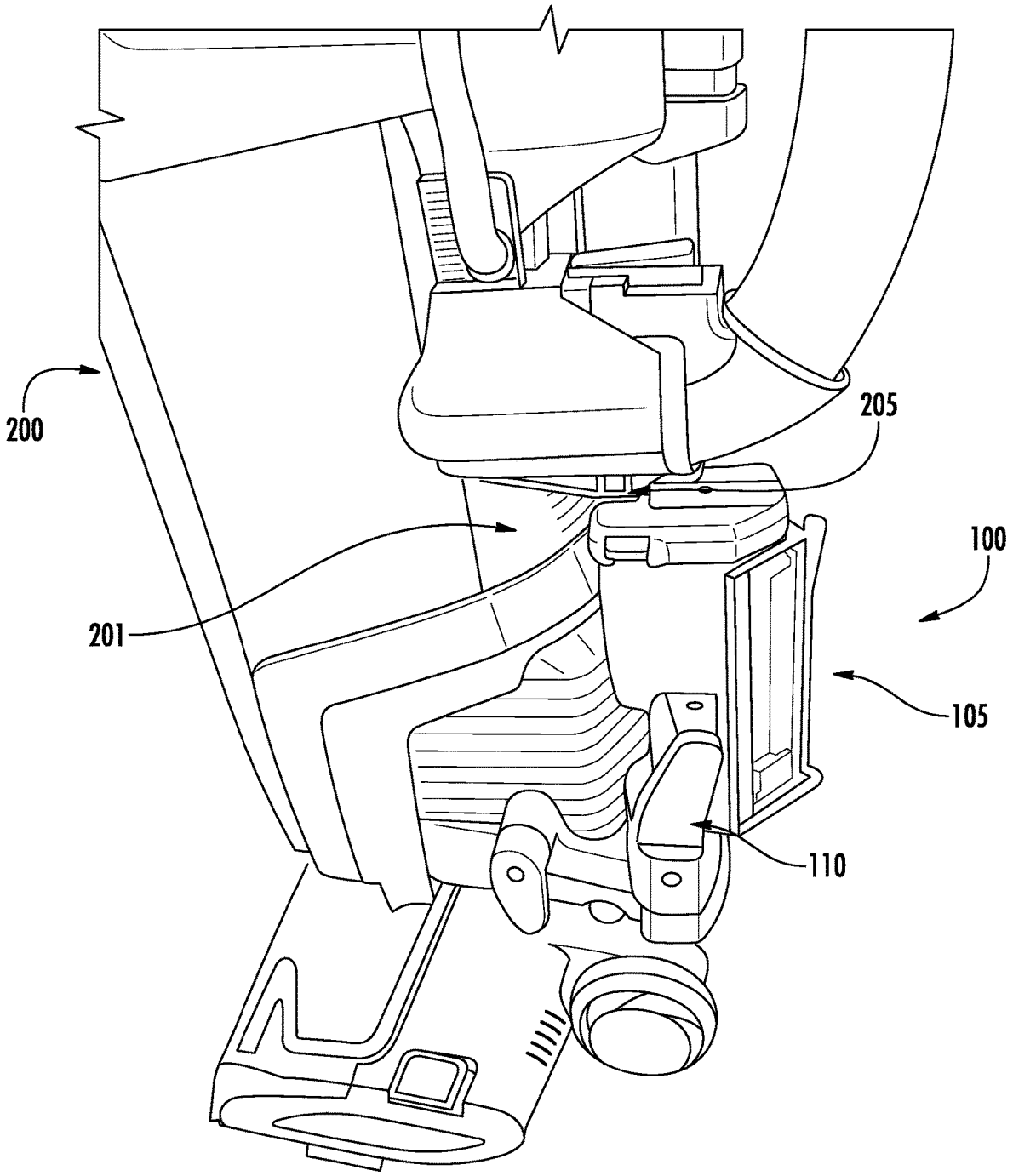

FIG. 11

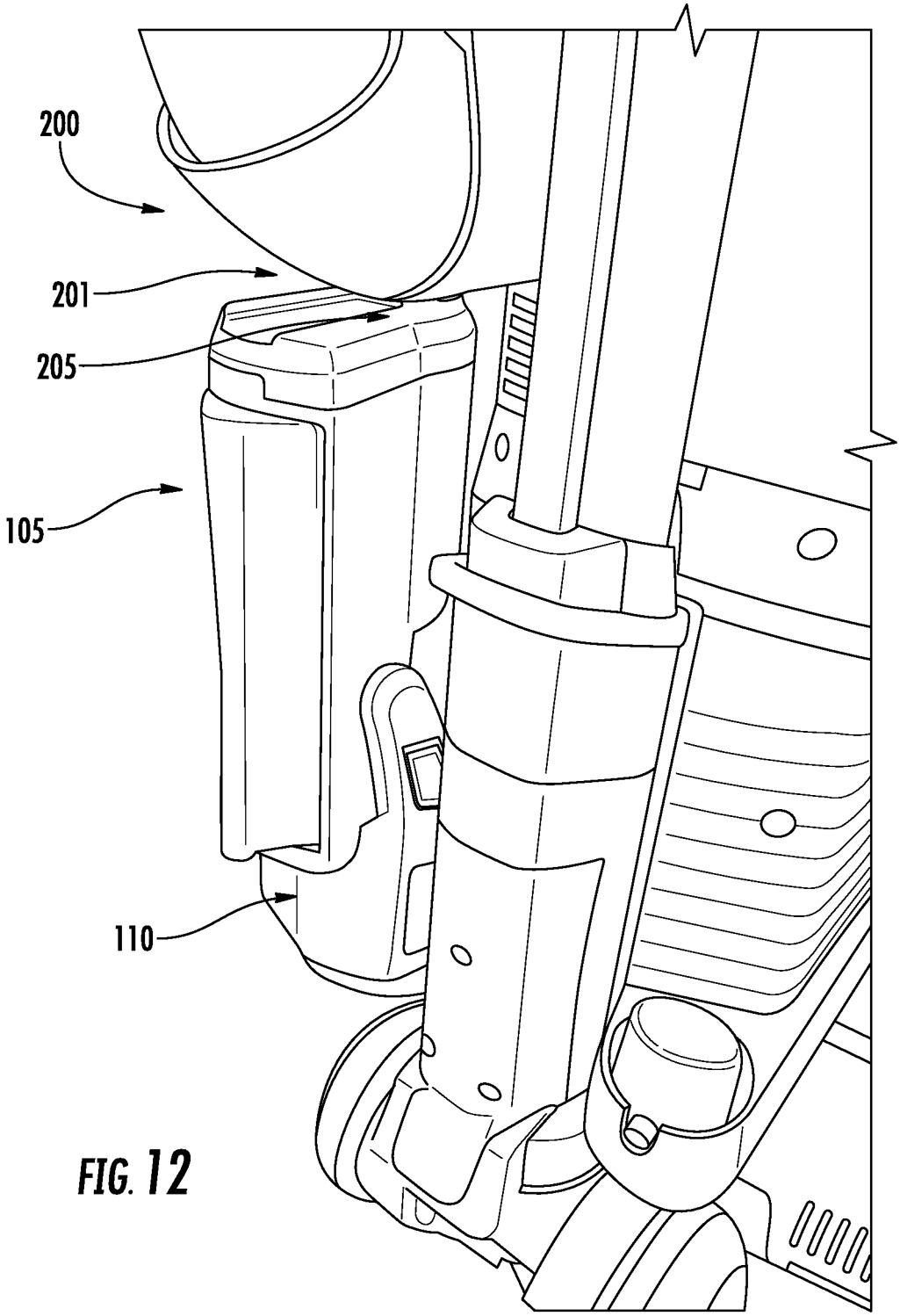

FIG. 12

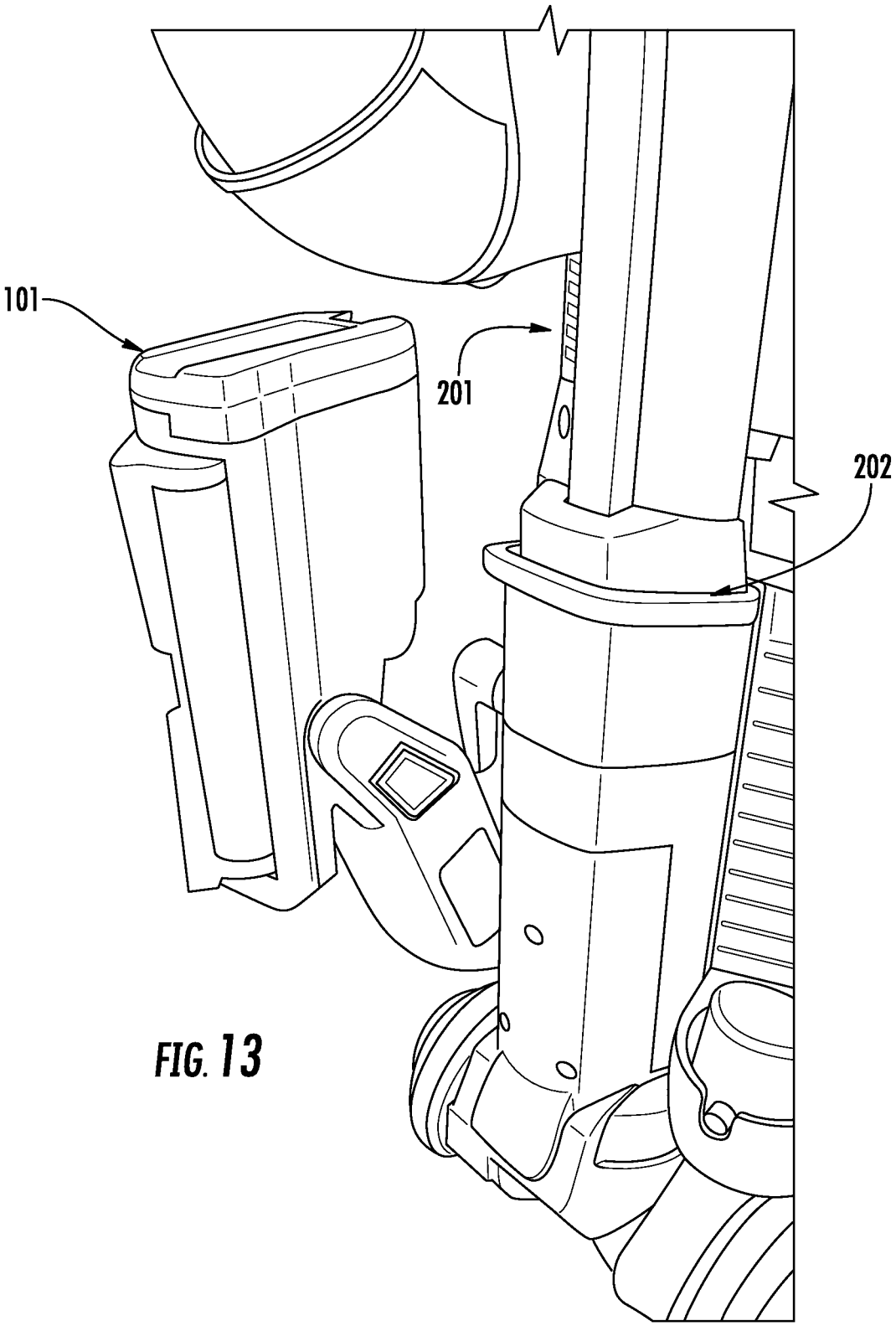

FIG. 13

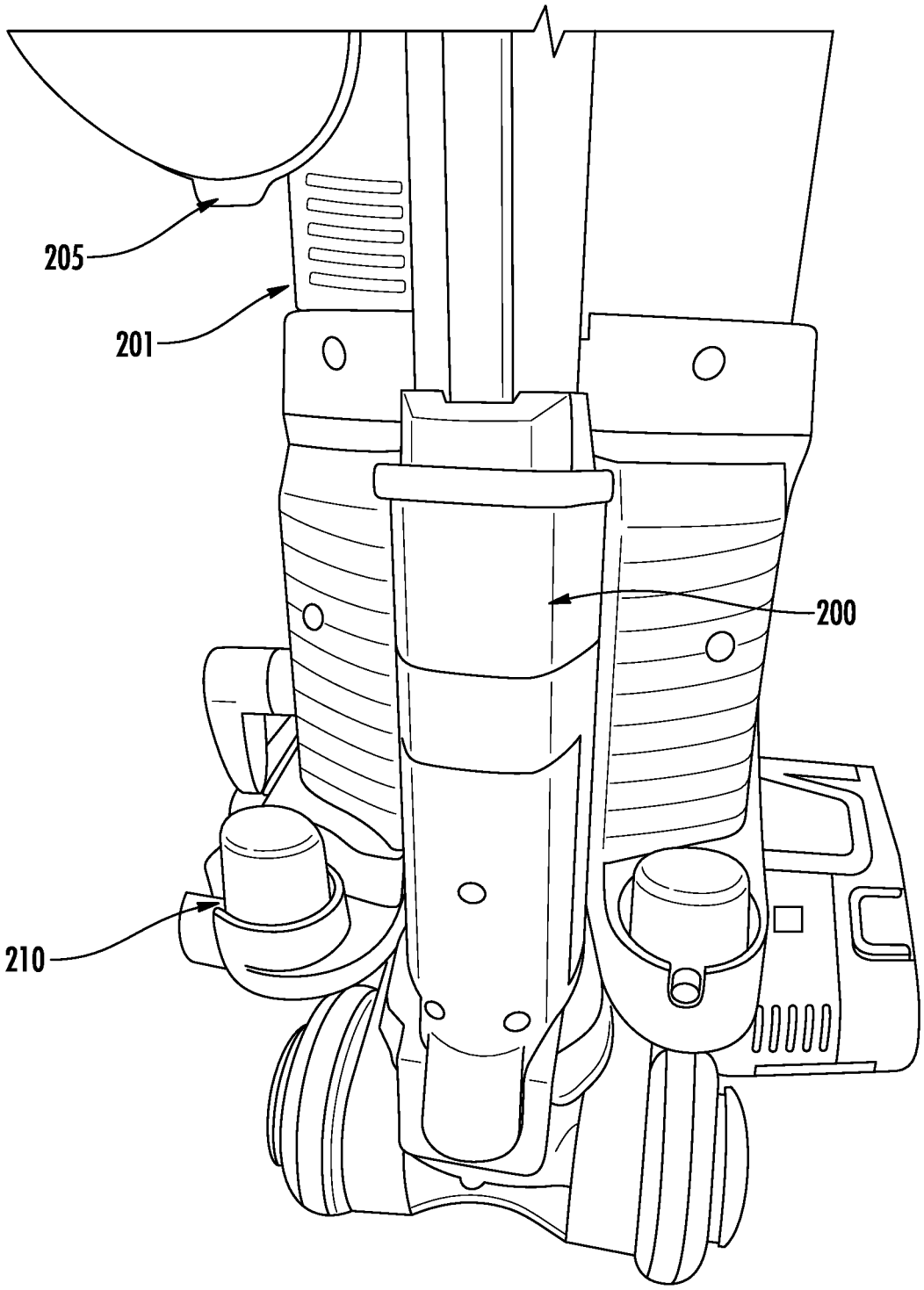

FIG. 14

VACUUM CLEANER TOOL HAVING A ROTATABLE DUCT FOR MOVING BETWEEN A USE POSITION AND STORAGE POSITION ON A VACUUM CLEANER

CROSS REFERENCE TO RELATED APPLICATIONS

The present application claims the benefit of U.S. Provisional Patent Application Ser. No. 62/553,247 filed Sep. 1, 2017, which is fully incorporated herein by reference.

FIELD OF THE INVENTION

The embodiments of the present invention relate to a powered vacuum cleaner tool mountable, for purposes of storage, to a vacuum cleaner. More particularly, the vacuum cleaner tool includes a rotatable duct movable between a use position and storage position.

BACKGROUND

Vacuum cleaner tools have been staples since the advent of vacuum cleaners. Vacuum cleaner tools were initially unpowered (e.g., wands) and have since been supplemented with powered vacuum tools (e.g., handheld motorized brush heads). In either instance, the vacuum tools removably attach to a vacuum cleaner hose or other vacuum cleaner tool during use. When not in use, vacuum cleaner tools are often stored separate from the vacuum cleaner.

It would be advantageous to develop a powered vacuum cleaner tool configured for easy-to-access storage on the vacuum cleaner.

SUMMARY

The embodiments of the present invention involve a vacuum cleaner tool comprising broadly a brush head and rotatable duct. The brush head comprises a housing containing a rotatable brush device and brush head inlet for sucking in loose debris and debris disrupted by the rotatable brush device. Depending on the embodiment, the rotatable brush device may be driven by a dedicated electromechanical motor or by air suction generated by the vacuum cleaner to which rotatable brush device is attached. The rotatable duct is configured for receiving at one end a hose or wand and rotates about a second end connected to the brush head. The rotatable duct moves between a use position and storage position. In a storage position, the rotatable duct extends generally parallel with, or in-line with, the brush head and, in a use position, the rotatable duct extends generally perpendicular to the brush head.

The vacuum cleaner tool is configured for storage on a subject vacuum cleaner. In one embodiment, the vacuum cleaner tool attaches to the vacuum cleaner via a manually-operated release on one end of the brush head positioned to interact with a fixed catch on the vacuum cleaner. Manually disengaging the release allows the vacuum cleaner tool to be removed from a storage position on the vacuum cleaner.

A seal on the brush head or rotatable duct serves to create a friction-based connection between the brush head and rotatable duct during use. In this manner, the suction at the brush head inlet is not disrupted by any air leaks.

Other variations, embodiments and features of the present invention will become evident from the following detailed description, drawings and claims.

BRIEF DESCRIPTION OF THE DRAWINGS

FIG. **1** illustrates a first view of the vacuum cleaner tool in a use position according to the embodiments of the present invention;

FIG. **2** illustrates a second view of the vacuum cleaner tool in a use position according to the embodiments of the present invention;

FIG. **3** illustrates a first perspective view of the vacuum cleaner tool in a storage position according to the embodiments of the present invention;

FIG. **4** illustrates a second perspective view of the vacuum cleaner tool in a storage position according to the embodiments of the present invention;

FIG. **5** illustrates a view of the seal associated with the engagement of the vacuum duct and brush head during use according to the embodiments of the present invention;

FIG. **6** illustrates the brush head inlet according to the embodiments of the present invention;

FIG. **7** illustrates the release at one end of the brush head according to the embodiments of the present invention;

FIG. **8** illustrates operation of the release according to the embodiments of the present invention;

FIG. **9** illustrates the positional relationship between the release of the vacuum cleaner tool and the fixed catch of the vacuum cleaner according to the embodiments of the present invention;

FIG. **10** illustrates the interaction between the release of the vacuum cleaner tool and the fixed catch of the vacuum cleaner according to the embodiments of the present invention;

FIG. **11** illustrates a side view of the vacuum cleaner with the vacuum cleaner tool in a stored position according to the embodiments of the present invention;

FIG. **12** illustrates a rear view of the vacuum cleaner with the vacuum cleaner tool in a stored position according to the embodiments of the present invention;

FIG. **13** illustrate a rear view of the vacuum cleaner with the release of the vacuum tool disengaged from the fixed catch of the vacuum cleaner according to the embodiments of the present invention; and

FIG. **14** illustrates the vacuum cleaner with the vacuum cleaner tool removed according to the embodiments of the present invention.

DETAILED DESCRIPTION

For the purposes of promoting an understanding of the principles in accordance with the embodiments of the present invention, reference will now be made to the embodiments illustrated in the drawings and specific language will be used to describe the same. It will nevertheless be understood that no limitation of the scope of the invention is thereby intended. Any alterations and further modifications of the inventive feature illustrated herein, and any additional applications of the principles of the invention as illustrated herein, which would normally occur to one skilled in the relevant art and having possession of this disclosure, are to be considered within the scope of the embodiments of the invention disclosed.

FIGS. **1-5** show a vacuum cleaner tool **100** configured to be fluidly coupled to a vacuum cleaner in accordance with the embodiments of the present invention. The vacuum cleaner tool **100** comprises a brush head **105**, a rotatable duct **110**, and one or more hinges **103** configured to allow the rotatable duct **110** to move between a use-position (e.g., as generally illustrated in FIGS. **1** and **2**) and a storage-position

as generally illustrated in FIGS. **3-6**. As shown in FIGS. **1** and **4**, the rotatable duct **110** may be configured to rotate generally 90° relative to the brush head **105** between the use position and storage position. The angular rotation of the rotatable duct **110** relative to the brush head **105** may be defined by the longitudinal axis LA**1** of the rotatable duct **110** and the longitudinal axis LA**2** of the brush head **105**. Those skilled in the art will recognize that the angular rotation range may be more, or less, than 90°. For example, the rotatable duct **110** may be configured to rotate generally 45° to 135° relative to the brush head **105**, e.g., 60° to 110° relative to the brush head **105**, e.g., generally 70° to 100° relative to the brush head **105**, and/or any range or value therein. In one embodiment, the rotatable duct **110** is configured between a use-position in which the longitudinal axis LA**1** of the rotatable duct **110** is generally perpendicular to the longitudinal axis LA**2** of the brush head **105**, and a storage position in which the longitudinal axis LA**1** of the rotatable duct **110** is generally parallel to the longitudinal axis LA**2** of the brush head **105**. It should be appreciated that the longitudinal axis LA**1** of the rotatable duct **110** does not have to be perpendicular to the longitudinal axis LA**2** of the brush head **105** when in the use-position, but rather may be at an angle of 45° to 135° relative to the longitudinal axis LA**2** of the brush head **105** when in the use-position. Similarly, it should be appreciated that the longitudinal axis LA**1** of the rotatable duct **110** does not have to be parallel to the longitudinal axis LA**2** of the brush head **105** when in the storage position, but rather may be at an angle of +/−45° relative to the longitudinal axis LA**2** of the brush head **105** when in the storage position.

With reference to FIG. **3**, the brush head **105** comprises a housing **115** containing brush head inlet **125**. The head inlet **125** may be fluidly coupled and proximate to a first end of one or more ducts **104** (FIG. **3**) defined, at least in part, by the brush head **105**. The second, generally opposite end of the duct **104** may define a vacuum opening **106** configured to be fluidly coupled to the rotatable duct **110** as described herein. As best seen in FIG. **6**, the brush head **105** optionally includes a rotatable brush device **120** at least partially rotatably disposed in the brush head inlet **125**. Brush head device **120** may include a rod **121** supporting bristles and/or flexible strips **122** extending therefrom. An electromechanical or air driven motor (not shown) may be configured to drive the rod **121** spinning the bristles and/or flexible strips **122** to disrupt debris (e.g., pet hair or fur) for ingestion through the brush head inlet **125** and eventually into the vacuum cleaner.

The rotatable duct **110** includes a body **107** defining a passageway or duct **117** (FIGS. **1-4**) having a first or receiving end **113** and a second, generally opposite end **111** (e.g., a vacuum opening or end **111** as generally illustrated in FIGS. **3** and **5**). The first or receiving end **113** (FIGS. **1-4**) is configured to be fluidly coupled to a wand or hose of the vacuum cleaner with which it to be used. The first or receiving end **113** of the rotatable duct **110** may be connected to the wand or hose via any connection known to those skilled in the art including, but not limited to, a frictional (such as a Morse taper or the like) or mechanical connection (such as a positive mechanical interference or lock or connection). Optionally, the rotatable duct **110** and/or the wand or hose may include a wand release button **121** to disengage/disconnect the rotatable duct **110** from the wand or hose. For example, activation of the wand release button **121** may cause an engagement member on the rotatable duct **110** to engage and/or disengage with a corresponding locking feature on the wand or hose of the vacuum cleaner to releasably secure the rotatable duct **110** to the wand or hose of the vacuum cleaner. Of course, the arrangement of the engagement member and the corresponding locking feature on the rotatable duct **110** and the wand or hose may be reversed.

The second or vacuum end **111** of the rotatable duct **110** may be configured to be selectively fluidly coupled to the vacuum opening **106** of the brush head **105**. In particular, the vacuum end **111** of the rotatable duct **110** may be fluidly coupled to the vacuum opening **106** of the brush head **105** when the rotatable duct **110** is pivoted about the hinge **103** to the in-use position as generally illustrated in FIGS. **1-2**, and may be fluidly disconnected from vacuum opening **106** of the brush head **105** when the rotatable duct **110** is pivoted about the hinge **103** to the storage position as generally illustrated in FIGS. **3-6**. As may be appreciated, the wand or hose directs the suction of the vacuum cleaner through the rotatable duct **110** to the brush head **105**, and more particularly the brush head inlet **125**, when the vacuum cleaner tool **100** is in the use-position. Now referring to FIG. **5**, seal **140** may be provided to maintain the effectiveness of the suction at the brush head inlet **125** by creating a frictional, secure joint between vacuum opening **111** of the rotatable duct **110** and vacuum opening **106** of brush head **105**. In one embodiment, the seal **140** is pliable and resilient such that in the use-position, circumferential edge **112** defining the vacuum opening **111** of the rotatable duct **110** presses into seal **140** preventing any meaningful loss of air and thus suction strength. While the seal **140** is shown on the vacuum opening **106** of the brush head **105**, it is also conceivable that a seal may instead or additionally be placed on the vacuum opening **111** of the rotatable duct **110**.

As noted herein, the rotatable duct **110** is coupled to and rotates relative to the brush head **105** using one or more hinges **103**. The hinges **103** defines a pivot axis PA (FIG. **5**) and may include any hinge known to those skilled in the art. In the illustrated embodiment, the vacuum cleaner tool **100** includes two hinges **103** disposed on opposite sides of the body **107** of the rotatable duct **110** (e.g., on opposite sides of the duct **104**). The use of two hinges **103** allows for the duct **104** to be unobstructed (e.g., compared to having a single hinge with a pivot pin extending through the duct **104** or having to bend the duct **104** around the pivot pin). It should be appreciated, however, that the vacuum cleaner tool **100** may include only one hinge **103** or more than two hinges **103**.

The rotatable duct **110** and/or the brush head **105** may include a hinge locks (e.g., but not limited to, a pin and locking groove arrangement or similar mechanical arrangement) to lock the rotatable duct **110** into a use or storage position relative to the brush head **105**. In one embodiment, the rotatable duct **110** is manually rotated between the use and storage positions by activating (e.g., sliding) a release member **135** (FIGS. **1-4**) and rotating the duct **110** relative to the housing **115** (e.g., from the storage position to the use position and/or from the storage position to the use position). Activation (e.g., sliding) of the release member **135** disengages an engagement member (e.g., tab, hook, pin, or the like which may be coupled to the rotatable duct **110**, not shown) from one or more corresponding locking features **131**, FIG. **3**, (e.g., one or more locking grooves **131** which may be formed in the housing **115**). By way of a non-limiting example, the engagement member may include a moveable pin and the corresponding locking features **131** may include at least a first and a second locking groove **131** formed in the housing **115** (only one visible), wherein the first locking groove (i.e., the visible locking in FIG. **3**)

corresponds to the use position and the second locking groove corresponds to the storage position. It should be appreciated that release member **135** may be on the brush head **105** and/or the engagement member and the corresponding locking features **131** relative to the brush head **105** and the rotatable duct **110** may be reversed.

In one embodiment, the rotatable duct **110** may include electrical contacts **113**, FIG. **2**, positioned to mate or otherwise touch corresponding electrical contacts in the wand or hose. For example, electrical contacts **113** may be positioned within a compartment **116** defined by the rotatable duct **110**. In such an embodiment, mating of the electrical contacts provides electrical power to drive a motor (not shown) configured to drive the brush head device **120** and/or provide electrical power to one or more lights or the like. Alternatively, the suction created by the vacuum cleaner causes rotation of the brush head device **120**.

FIGS. **7** and **8** show a storage lock or release **150** associated with the vacuum cleaner tool **100**. The storage lock **150** serves to removably secure the vacuum cleaner tool **100** to the vacuum cleaner **200** (shown in FIGS. **9-14**), for example, to a base, body, handle, or the like **201**. As best seen in FIG. **8**, the storage lock **150** is manually operated using button **155**. Depressing button **155** causes the storage lock **150** to mechanically depress for purposes detailed below.

Storage lock **150** provides an effective solution for attaching the vacuum cleaner tool **100** to the vacuum cleaner **200** when in the storage position as best seen in FIGS. **11** and **12**. In one embodiment, the vacuum cleaner tool **100** is attached to a lower portion of the vacuum cleaner **200**. In other embodiments, the vacuum cleaner tool **100** may attach to the vacuum cleaner **200** at other positions thereon. As mentioned above, and shown in FIGS. **3** and **4**, the rotatable duct **110** extends generally parallel to, or in-line with, the brush head **105** when stored creating a slim, elongated profile.

FIGS. **9** and **10** show the position and operation of the storage lock **150**. FIG. **9** shows the storage lock **150** positioned for attachment to the vacuum cleaner **200**. The storage lock **150** is positioned to engage a fixed catch **205** integral with the vacuum cleaner **200**. When engaged, as shown in FIG. **10**, the storage lock **150** secures one end **101** (e.g., a first lateral end) of the vacuum cleaner tool **100** (e.g., the end **101** of the brush head **105**) to the vacuum cleaner **200** (e.g., the storage lock **150** secures the end **101** of the brush head **105** to the fixed catch **205** which is part of the vacuum cleaner **200**). The other end of the vacuum cleaner tool **100** (e.g., the receiving end **113** of the rotatable duct **110**), may be configured to slide over a vertical stay **210** (best seen in FIG. **14**) of the vacuum cleaner **200**. As shown, the vacuum cleaner tool **100** is stored in a generally vertical orientation. In practice, to attach the vacuum cleaner tool **100** to the vacuum cleaner **200**, the receiving end **113** is first positioned over stay **210** after which the storage lock **150** is moved into engagement with catch **205**. To remove the vacuum cleaner tool **100**, the storage lock **150** is manually disengaged from the catch **205** (see FIG. **13**) and the receiving end **113** of the vacuum cleaner tool **100** is lifted off the stay **210**. In both instances, the rotatable duct **110** permits the released brush head **105** to be moved away from interference with the vacuum cleaner **200** so that the vacuum cleaner tool **100** is free to be lifted off the stay **210**.

While the principles of the invention have been described herein, it is to be understood by those skilled in the art that this description is made only by way of example and not as a limitation as to the scope of the invention. Other embodiments are contemplated within the scope of the present invention in addition to the exemplary embodiments shown and described herein. It will be appreciated by a person skilled in the art that a surface cleaning apparatus and/or agitator may embody any one or more of the features contained herein and that the features may be used in any particular combination or sub-combination. Modifications and substitutions by one of ordinary skill in the art are considered to be within the scope of the present invention, which is not to be limited except by the following claims.

What is claimed is:

1. A vacuum cleaner tool comprising:

a brush head comprising a housing including a brush head inlet and a duct, said duct comprising a first end fluidly coupled to said brush head inlet and a second, generally opposite end;

a rotatable duct comprising a body defining a passageway having a first end configured to be fluidly coupled to a wand or a hose of a vacuum cleaner, and a second, generally opposite end configured to be selectively fluidly coupled to said second end of said duct of said brush head;

a hinge pivotally coupling said rotatable duct to said brush head and configured to allow said rotatable duct to pivot between a use-position in which said second end of said rotatable duct is fluidly coupled to said second end of said brush head, and a storage position in which said second end of said rotatable duct pivots about said hinge to separate from rotatable duct such that said rotatable duct is out of fluid engagement with said second end of said brush head while remaining pivotally coupled to said brush head.

2. The vacuum cleaner tool of claim **1**, wherein said rotatable duct is configured to rotate 45° to 135° relative to said brush head.

3. The vacuum cleaner tool of claim **2**, wherein said rotatable duct is configured to rotate approximately 90° relative to said brush head.

4. The vacuum cleaner tool of claim **1**, wherein a longitudinal axis of said rotatable duct is configured to be generally perpendicular to a longitudinal axis of said brush head when in said use-position.

5. The vacuum cleaner tool of claim **1**, wherein a longitudinal axis of said rotatable duct is configured to be generally parallel to a longitudinal axis of said brush head when in said storage position.

6. The vacuum cleaner tool of claim **1**, wherein a longitudinal axis of said rotatable duct is configured to be generally perpendicular to a longitudinal axis of said brush head when in said use-position and wherein said longitudinal axis of said rotatable duct is configured to be generally parallel to said longitudinal axis of said brush head when in said storage position.

7. The vacuum cleaner tool of claim **1**, wherein said brush head further includes an agitator at least partially rotatably disposed in said brush head inlet.

8. The vacuum cleaner tool of claim **7**, wherein said first end of said rotatable duct further includes at least one electrical connection configured to supply electrical power to a motor disposed in said brush head to rotate said agitator.

9. The vacuum cleaner tool of claim **1**, further comprising a hinge lock to secure said rotatable duct in said in-use position.

10. The vacuum cleaner tool of claim **1**, further comprising a hinge lock to secure said rotatable duct in said storage position.

11. The vacuum cleaner tool of claim **10**, further comprising a storage lock to secure said vacuum cleaner tool to a base of said vacuum cleaner in said storage position.

12. The vacuum cleaner tool of claim **11**, wherein said first end of said rotatable duct is further configured to receive a vertical stay of said base to secure said first end of said rotatable duct to said base when in said storage position.

13. The vacuum cleaner tool of claim **12**, wherein said storage lock is disposed on said brush head.

14. The vacuum cleaner tool of claim **12**, wherein said storage lock is configured to secure a lateral end of said brush head to said base.

15. The vacuum cleaner tool of claim **1**, further comprising a seal about at least one said second end of said rotatable duct or said second end of said brush head, said seal preventing air from escaping when second ends of said rotatable duct and said brush head are aligned.

16. The vacuum cleaner tool of claim **1**, further comprising a seal about at least one said second end of said rotatable duct or said second end of said brush head, said seal configured to prevent air from escaping only when said vacuum cleaner tool is arranged in said in-use position and second ends of said rotatable duct and said brush head are aligned.

17. A vacuum cleaner system comprising:

a vacuum cleaner comprising a flexible vacuum hose, a cleaning head, and a base pivotally coupled to said cleaning head, said base further comprising a vertical stay; and

a vacuum cleaner tool comprising:

a brush head comprising a housing including a brush head inlet and a duct, said duct comprising a first end fluidly coupled to said brush head inlet and a second, generally opposite end;

a rotatable duct comprising a body defining a passageway having a first end configured to be fluidly coupled to said vacuum hose of said vacuum cleaner, and a second, generally opposite end configured to be selectively fluidly coupled to said second end of said duct of said brush head; and

a hinge pivotally coupling said rotatable duct to said brush head and configured to allow said rotatable duct to move between a use-position in which said second end of said rotatable duct is fluidly coupled to said second end of said brush head, and a storage position in which said second end of said rotatable duct is disconnected from said second end of said brush head and is further configured to receive at least a portion of said vertical stay; and

a storage lock to secure said vacuum cleaner tool to said base of said vacuum cleaner in said storage position;

wherein a longitudinal axis of said rotatable duct is configured to be generally perpendicular to a longitudinal axis of said brush head when in said use-position; wherein said longitudinal axis of said rotatable duct is configured to be generally parallel to said longitudinal axis of said brush head when in said storage position; and

wherein said hinge is located at a position that is offset from said longitudinal axis of said rotatable duct and said longitudinal axis of said brush head.

18. The vacuum cleaner system of claim **17**, wherein said vacuum cleaner tool further comprises a hinge lock to secure said rotatable duct in said in-use position and to secure said rotatable duct in said storage position.

19. The vacuum cleaner system of claim **17**, wherein said brush head further includes an agitator at least partially rotatably disposed in said brush head inlet.

* * * * *