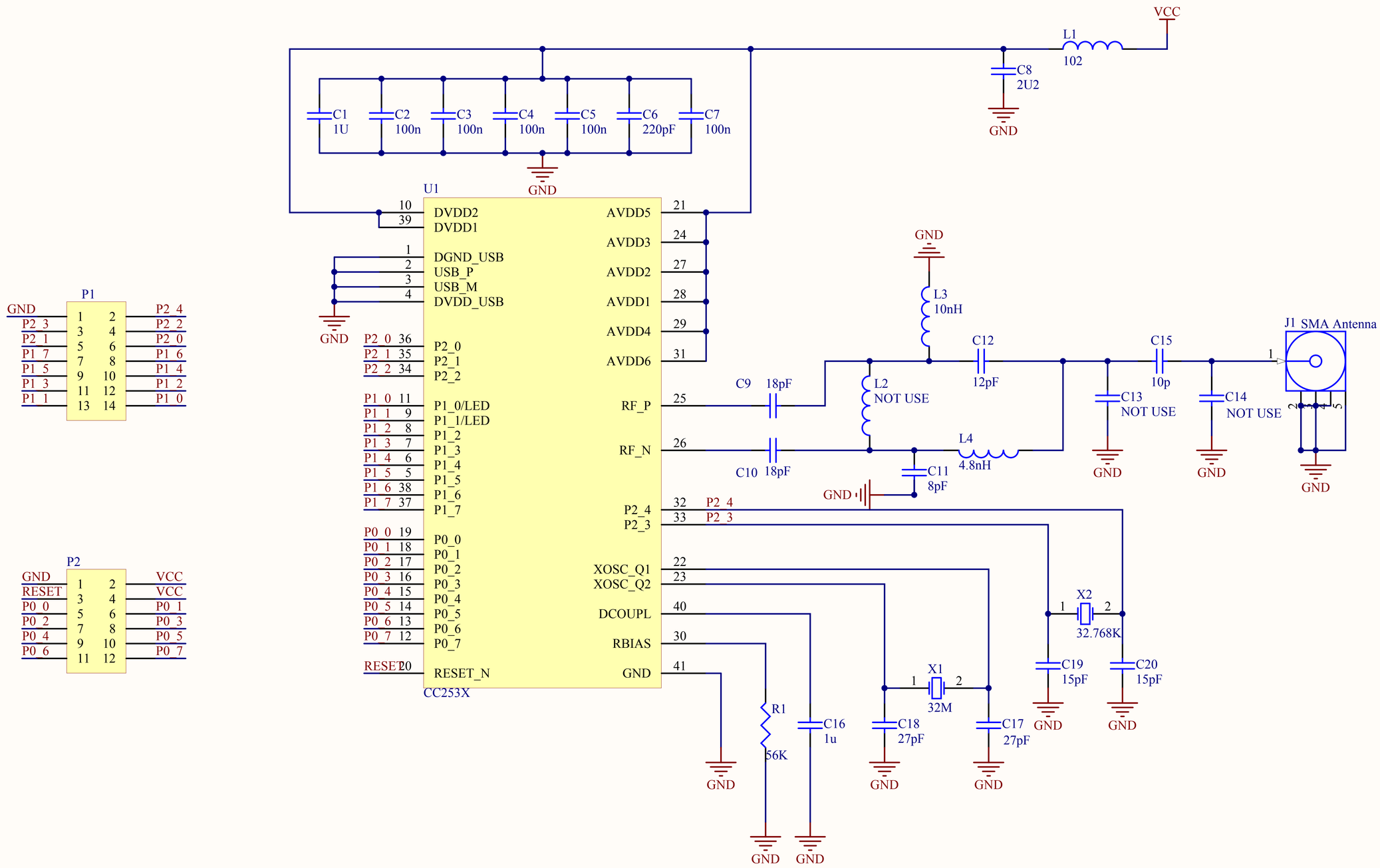

WeBee CC2530_Core

Title		
Size A4	Number	Revision
Date: 2012-8-6		Sheet of
File: E:\ \..\2530.SchDoc		Drawn By: