Periodic Boundary Conditions for RVEs

Python Code (rve_mpc_generator.py) to Construct Constraints for WARP3D and Abaqus
(Rectangular Prism RVEs)

Robert H. Dodds, Jr., PhD, NAE
rhdodds@gmail.com
Updated: February 1, 2026 at 9:08pm

1 Purpose

The script[1] generates ready-to-use, boundary-condition include files for a 3D representative volume element (RVE) using periodic displacement boundary conditions (PBCs), in formats compatible with WARP3D and Abaqus.

The 3D mesh must define a rectangular prism, often constructed using hex or tet elements. Nodes on the boundary surfaces must satisfy the *node-pairing* requirement. Pairs of nodes are located on opposite faces of the RVE whose in-plane coordinates are identical. They represent the same physical point in the periodic material and are coupled by the periodic displacement constraints. The codes NEPER and GMSH have capabilities to generate meshes with node pairing.

For WARP3D the generated output file has:

- a `constraints` block (absolute displacement constraints), followed by
- a `multipoint` block (multi-point constraints, MPCs).

For Abaqus the generated output file has:

- an `*EQUATION` section (multi-point constraints, MPCs), followed by
- a `*BOUNDARY` section (absolute displacement constraints).

No manual editing of the generated constraints/MPC files should be required for a correctly defined periodic RVE mesh. They also contain extensive comment lines describing features of the generated MPCs.

Figure 1 illustrates a rectangular prism RVE with some notation used in this document.

The periodic loadings are specified by

$$u_1^{j+} - u_1^{j-} = \bar{\varepsilon}_{11}\,\Delta x_1^j + \bar{\varepsilon}_{12}\,\Delta x_2^j + \bar{\varepsilon}_{13}\,\Delta x_3^j, \tag{1a}$$

$$u_2^{j+} - u_2^{j-} = \bar{\varepsilon}_{21}\,\Delta x_1^j + \bar{\varepsilon}_{22}\,\Delta x_2^j + \bar{\varepsilon}_{23}\,\Delta x_3^j, \tag{1b}$$

$$u_3^{j+} - u_3^{j-} = \bar{\varepsilon}_{31}\,\Delta x_1^j + \bar{\varepsilon}_{32}\,\Delta x_2^j + \bar{\varepsilon}_{33}\,\Delta x_3^j\ . \tag{1c}$$

where $\bar{\varepsilon}_{ik}$ denotes the known, average strain tensor at a material point to be imposed on the RVE. This form supports algorithmic enforcement of periodicity; it is not intended to assert that the imposed field corresponds to a physically admissible macroscopic strain in the classical sense. In this implementation, $\bar{\varepsilon}_{ik}$, is not required to be symmetric. Example: $\bar{\varepsilon}_{12}$ may be different than $\bar{\varepsilon}_{21}$. Here it is a convenient framework to describe loadings on the RVE.

Table 1 lists the symbolic MPC equations prior to elimination of zero terms, absolute constraints, and dummy-node substitutions. The boundary surfaces have vertex nodes, edge nodes and face nodes. Edge node lists omit their vertex nodes; face node lists omit their edge and vertex nodes.

[1] The code was written through extensive interactions with ChatGPT 5.2 over multiple weeks. Many design iterations were required to properly code the PBC theory, algorithmic details to detect/capture special cases, parse the input data file, format correctly output for WARP3D and Abaqus, and to develop comprehensive error checking.

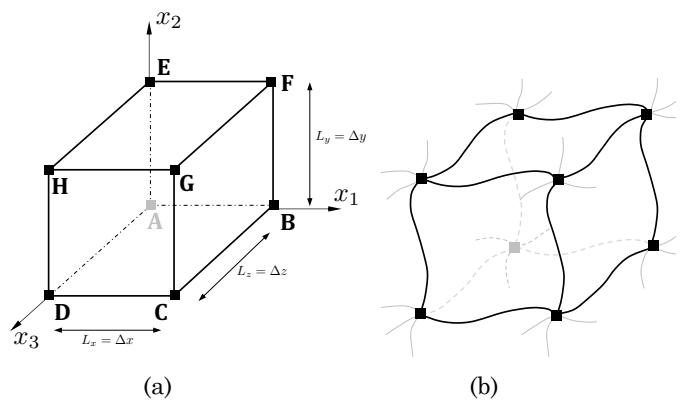

Fig. 1. (a) Labelling of vertices, edges and faces for rectangular prism RVE. (b) Example periodic displacements.

2 Input data required by the script

The input is a text file describing the RVE mesh and loading. Comment lines (or inline comments) may be included using the character `#`.

Required items include:

- number of nodes, excluding additional dummy-nodes required to enforce the PBCs. Element data may be present but is not used by the script,
- declared dimensions L_x, L_y, L_z of the rectangular prism (used for reporting and consistency checks),
- node numbers for the 8 vertex nodes A–H,
- the imposed 3×3 macroscopic strain tensor $\bar{\varepsilon}_{ij}$ (row-wise input). Does not need to be symmetric,
- an optional list of absolute constraints (DOFs fixed to zero). Usually to prevent rigid-body motion,
- a `DUMMY_EPS_MAP` block defining the dummy-node method for each strain component used, and
- the X, Y, Z coordinates of all nodes. Nodes must be numbered sequentially[2]. Coordinate values are truncated at 7 significant figures after reading. The code expects the dummy-node pairs to be defined after all nodes of the RVE. Coordinates for dummy nodes are ignored when included.

[2]This is a requirement imposed by WARP3D

Face Nodes	**Vertex Nodes**	**Edge Nodes**
$u_i^{\mathrm{FGCB}} - u_i^{\mathrm{EHDA}} - L_x\,\bar{\varepsilon}_{i1} = 0$	$u_i^{\mathrm{G}} - u_i^{\mathrm{A}} - L_x\,\bar{\varepsilon}_{i1} - L_y\,\bar{\varepsilon}_{i2} - L_z\,\bar{\varepsilon}_{i3} = 0$	FG $\leftrightarrow$ AD: $u_i^{\mathrm{FG}} - u_i^{\mathrm{AD}} - L_x\,\bar{\varepsilon}_{i1} - L_y\,\bar{\varepsilon}_{i2} = 0$
$u_i^{\mathrm{FEHG}} - u_i^{\mathrm{BADC}} - L_y\,\bar{\varepsilon}_{i2} = 0$	$u_i^{\mathrm{F}} - u_i^{\mathrm{D}} - L_x\,\bar{\varepsilon}_{i1} - L_y\,\bar{\varepsilon}_{i2} + L_z\,\bar{\varepsilon}_{i3} = 0$	HG $\leftrightarrow$ AB: $u_i^{\mathrm{HG}} - u_i^{\mathrm{AB}} - L_y\,\bar{\varepsilon}_{i2} - L_z\,\bar{\varepsilon}_{i3} = 0$
$u_i^{\mathrm{GHDC}} - u_i^{\mathrm{FEAB}} - L_z\,\bar{\varepsilon}_{i3} = 0$	$u_i^{\mathrm{H}} - u_i^{\mathrm{B}} + L_x\,\bar{\varepsilon}_{i1} - L_y\,\bar{\varepsilon}_{i2} - L_z\,\bar{\varepsilon}_{i3} = 0$	GC $\leftrightarrow$ EA: $u_i^{\mathrm{GC}} - u_i^{\mathrm{EA}} - L_x\,\bar{\varepsilon}_{i1} - L_z\,\bar{\varepsilon}_{i3} = 0$
	$u_i^{\mathrm{C}} - u_i^{\mathrm{E}} - L_x\,\bar{\varepsilon}_{i1} + L_y\,\bar{\varepsilon}_{i2} - L_z\,\bar{\varepsilon}_{i3} = 0$	BC $\leftrightarrow$ EH: $u_i^{\mathrm{BC}} - u_i^{\mathrm{EH}} - L_x\,\bar{\varepsilon}_{i1} + L_y\,\bar{\varepsilon}_{i2} = 0$
		FE $\leftrightarrow$ CD: $u_i^{\mathrm{FE}} - u_i^{\mathrm{CD}} - L_y\,\bar{\varepsilon}_{i2} + L_z\,\bar{\varepsilon}_{i3} = 0$
		FB $\leftrightarrow$ HD: $u_i^{\mathrm{FB}} - u_i^{\mathrm{HD}} - L_x\,\bar{\varepsilon}_{i1} + L_z\,\bar{\varepsilon}_{i3} = 0$

Table 1. MPC equations for faces, vertices, and edges in periodic boundary conditions. $i = 1, 2, 3$

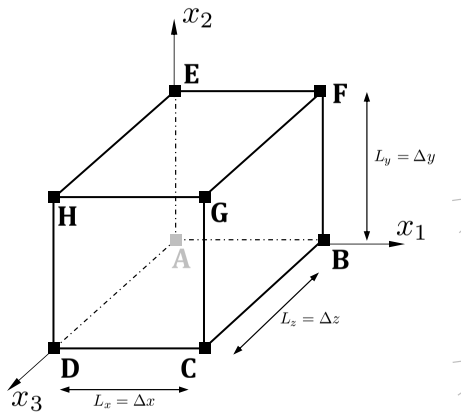

3 Origin-independence via automatic detection of RVE bounds

The script does *not* require that the RVE occupy $x \in [0, L_x]$, $y \in [0, L_y]$, $z \in [0, L_z]$. Instead, the script detects the geometric bounds directly from the node coordinates:

$$x_{\min} = \min(x), \qquad x_{\max} = \max(x), \tag{2}$$
$$y_{\min} = \min(y), \qquad y_{\max} = \max(y), \tag{3}$$
$$z_{\min} = \min(z), \qquad z_{\max} = \max(z), \tag{4}$$

and computes the detected dimensions:

$$L_x^{\text{det}} = x_{\max} - x_{\min}, \qquad L_y^{\text{det}} = y_{\max} - y_{\min}, \qquad L_z^{\text{det}} = z_{\max} - z_{\min}. \tag{5}$$

The script reports both the declared dimensions (L_x, L_y, L_z) and the detected dimensions $(L_x^{\text{det}}, L_y^{\text{det}}, L_z^{\text{det}})$ and issues a warning if they differ beyond tolerance.

4 Boundary node classification

Each RVE node is classified according to how many boundary planes it lies on:

- <u>vertex node</u>: on the intersection of three boundary planes. The 8 nodes are labelled A–H.
- <u>edge node</u>: on the intersection of two boundary planes, excluding vertex nodes
- <u>face node</u>: on exactly one boundary plane, excluding vertex and edge nodes
- <u>interior node</u>: on no boundary plane,

Boundary planes are detected using the automatically determined bounds:

- X^- plane at $x = x_{\min}$, $\quad X^+$ plane at $x = x_{\max}$,
- Y^- plane at $y = y_{\min}$, $\quad Y^+$ plane at $y = y_{\max}$,
- Z^- plane at $z = z_{\min}$, $\quad Z^+$ plane at $z = z_{\max}$.

A coordinate tolerance (relative to the largest RVE dimension) is used when assigning nodes to planes.

5 Construction of periodic node pairings

The script performs extensive error checking to confirm the boundary nodes satisfy the geometric, node-pairing requirements.

5.1 Face-node pairings

Nodes on opposite faces are paired by matching the two transverse coordinates (within tolerance):

- $X^- \leftrightarrow X^+$: match (y, z),
- $Y^- \leftrightarrow Y^+$: match (x, z),
- $Z^- \leftrightarrow Z^+$: match (x, y).

For each paired node $(-, +)$, the script computes the geometric offset vector

$$\Delta\mathbf{x} = \mathbf{x}^+ - \mathbf{x}^-, \tag{6}$$

which is translation-invariant and therefore independent of the global origin.

5.2 Edge-node pairings

Edge nodes are identified by the set of two boundary planes they lie on, *e.g.*, $\{X^-, Y^-\}$. Each family of opposite edges is paired using the remaining "free" coordinate as the edge parameter:

- $\{X^-, Y^-\} \leftrightarrow \{X^+, Y^+\}$, parameter axis z,
- $\{X^-, Y^+\} \leftrightarrow \{X^+, Y^-\}$, parameter axis z,
- $\{X^-, Z^-\} \leftrightarrow \{X^+, Z^+\}$, parameter axis y,
- $\{X^-, Z^+\} \leftrightarrow \{X^+, Z^-\}$, parameter axis y,
- $\{Y^-, Z^-\} \leftrightarrow \{Y^+, Z^+\}$, parameter axis x,
- $\{Y^-, Z^+\} \leftrightarrow \{Y^+, Z^-\}$, parameter axis x.

For each edge-node pair, $\Delta\mathbf{x}$ is computed from coordinates (same as for face nodes).

5.3 Vertex-node pairings

The user supplies the node numbers for the eight vertices A–H. The script forms the four body-diagonal vertex pairings and computes $\Delta\mathbf{x}$ directly from the vertex coordinates; the origin location does not matter.

6 Dummy node method

WARP3D supports only homogeneous, multi-point equations (MPCs), *e.g.*,

$$27\ 1.0\ \mathrm{w}\ -\ 20\ 1.0\ \mathrm{w}\ -49\ 3.5\ \mathrm{w} = 0 \tag{7}$$

To make an equivalent, non-homogenous equation required to impose the non-zero terms of $\bar{\varepsilon}_{ij}$, WARP3D uses the so-called dummy-node and rigid-link element method. The non-homogeneous terms are shifted to displacements applied at auxiliary (dummy) nodes, so that all MPCs become homogeneous. This greatly simplifies assembly of the equations and is compatible with the existing WARP3D constraint infrastructure.

The pairs of dummy nodes without the link element are adopted to generate PBCs for Abaqus.

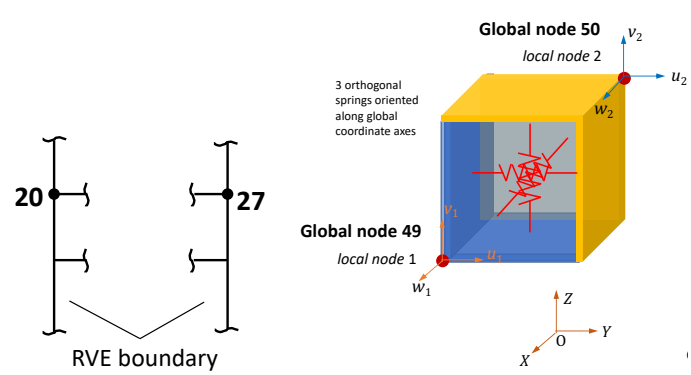

Fig. 2. Example demonstrating use of dummy nodes and rigid-link element to enable definition of homogeneous multi-point constraints. Local nodes 1, 2 of the link element are often coincident.

Figure 2 shows the setup for a simplified application of the dummy node-rigid link element method. The link2 element is connected to *dummy* nodes 49 and 50. For convenience these nodes are often defined well outside the RVE – their actual (global) position is immaterial. Spring stiffness values for the element in global (x, y, z) directions are set to a sufficiently large value. Absolute constraints are imposed on node 50, *e.g.*,

$$\mathsf{50 \;\; u \;\; = 0 \;\; v = 0 \;\; w = 0.0025} \tag{8}$$

Given the large spring stiffnesses for the link element, node 49 will have the same displacements as node 50. Node 49 thus has the same w displacement as node 50, while maintaining the required homogeneous form.

Most often, 6 link elements and corresponding dummy-node pairs are used when all terms of $\bar{\varepsilon}_{ij}$ are non-zero.

6.1 `DUMMY_EPS_MAP` definition

The input file includes a `DUMMY_EPS_MAP` block with entries of the form:

```
i j dummy_node driver_node dof
```

Interpretation of a map entry (i, j):

- (i, j) is the entry of the $\bar{\varepsilon}_{ij}$.
- dummy_node appears in the homogeneous MPC equation. Example: node 49 in Fig. 2.
- driver_node receives an absolute displacement constraint on the indicated dof whose value equals $\bar{\varepsilon}_{ij}$. Example: node 50 in Fig. 2.

The user connects driver_node and dummy_node using stiff link elements in the WARP3D model, so that the imposed driver displacement is transmitted to the dummy DOF used in the MPCs.

In the Abaqus model, additional MPCs connect the dummy_node and driver_node.

6.2 Resulting MPC structure

For a generic paired-node relation, the script generates a WARP3D MPC equation of the form

$$u_i^+ - u_i^- \; - \; \Delta x_1 \, d_{i1} \; - \; \Delta x_2 \, d_{i2} \; - \; \Delta x_3 \, d_{i3} \; = \; 0, \tag{9}$$

where d_{ij} denotes the dummy-node DOF representing $\bar{\varepsilon}_{ij}$. Terms are automatically omitted when:

- $\bar{\varepsilon}_{ij} = 0$,
- $\Delta x_j = 0$, or
- the referenced DOF is already fixed by an absolute constraint.

6.3 Absolute constraints and closure iteration

6.3.1 Absolute constraints emitted by the script

Absolute constraints are emitted under the WARP3D keyword `constraints`. The script writes two classes of absolute constraints:

- User-specified zero constraints from the `ABS_CONSTRAINTS` section of the input file.
- Driver constraints implied by the strain tensor and the `DUMMY_EPS_MAP`:

  $$u(\text{driver_node}, \text{dof}) = \bar{\varepsilon}_{ij} \tag{10}$$

  for each nonzero $\bar{\varepsilon}_{ij}$ present in the map.

A consistency check is performed: a dof cannot be both fixed to zero and assigned a nonzero driver value.

6.3.2 Implied constraints and two-pass closure

When some strain components in $\bar{\varepsilon}_{ij}$ are zero and/or absolute constraints are applied, some MPC equations become unnecessary. If an MPC equation collapses to a single remaining, *physical* term, *e.g.*, $63\,u = 0$, then it becomes an implied absolute constraint rather than an MPC. To detect these situations, the script performs an iterative, closure operation:

- generate MPCs under the current set of absolute constraints,
- collect any implied absolute constraints,
- add them to the absolute constraint set,
- repeat until no new implied constraints are found, thereby ensuring that all constraints are output in valid WARP3D order and that no incomplete MPCs remain.
- the same closure process is performed to generate MPCs for Abaqus

6.4 Output file structure and WARP3D ordering

The output file generated by the script begins with a comment header describing:

- input file name,
- detected bounds and dimensions,
- declared vs. detected dimension comparison,
- the imposed strain tensor,
- the `DUMMY_EPS_MAP` summary, and
- any warnings.

The output then contains:

- a `constraints` block (absolute constraints), followed by
- a `multipoint` block (MPC equations).

This ordering matches the WARP3D requirement that absolute constraints appear before MPC definitions.

7 PBC Implementation for Abaqus

A number of methods are available in Abaqus to impose the PBCs on rectangular RVEs. For consistency with the WARP3D formulation, this implementation retains the dummy-node pairs (Section 6, Fig. 2). However, Abaqus does not require rigid-link elements between the nodes; Abaqus permits nodes that are not connected to elements.

Rather than stiff, orthogonal springs connecting the two nodes of each node pair, 3 additional MPCs are defined in Abaqus to make the u, v, w displacements equal at each pair of dummy nodes, *e.g.*, nodes 49, 50 in Fig. 2. These three *EQUATION constraints enforce $u_{49} = u_{50}$, $v_{49} = v_{50}$, and $w_{49} = w_{50}$:

```
*EQUATION
2
49, 1, 1.0
50, 1, -1.0
*EQUATION
2
49, 2, 1.0
```

```
50, 2, -1.0
*EQUATION
2
49, 3, 1.0
50, 3, -1.0
```

The MPCs to define periodic conditions for vertex, edge and face nodes are then defined with input of the form

```
** --- EDGE MPCs (type X-Z (-+)/(+-)) ---
*EQUATION
4
6, 1, 1.0
22, 1, -1.0
28, 1, -1.0
32, 1, 4.0
*EQUATION
4
6, 2, 1.0
22, 2, -1.0
30, 2, -1.0
34, 2, 4.0
 ...
 ...
```

The absolute constraints imposed on the dummy nodes to load the model, *e.g.*, node 50 in Fig. 2, are defined with *BOUNDARY.

```
*BOUNDARY
50, 1, 1, 0.1
50, 2, 2, 0.2
 ....
 ....
1, 1, 1, 0.0
1, 2, 2, 0.0     ** Node 1 constraints, for example, to prevent rigid motion
1, 3, 3, 0.0
```

All the MPCs are defined using *EQUATION commands (which must precede the *BOUNDARY in Abaqus .inp files).

7.1 Output file structure and Abaqus ordering

The output file generated by the script begins with a comment header describing:

- input file name,
- detected bounds and dimensions,
- declared vs. detected dimension comparison,
- the imposed strain tensor,
- the `DUMMY_EPS_MAP` summary, and

- any warnings.

The output then contains:

- a *EQUATION for each multi-point constraint, followed by
- a *BOUNDARY to define absolute constraints that suppress rigid motion to impose non-zero displacements from $\bar{\varepsilon}_{ij}$

This ordering matches the Abaqus requirement that MPCs are part of the model definition and absolute constraints are part of the loading.

8 Robustness and large meshes

Node-pairing is performed in the script using simple coordinate-key hashing (rounded transverse coordinates), which is efficient for large boundary node sets. The total number of MPC equations scales with the number of paired boundary nodes and three displacement components.

The script has been exercised on large RVEs (10^5 nodes) and produces tens of thousands of MPC equations with no manual editing required in typical workflows.

Execution time for the Python script is a few seconds for large models.

9 Example Problem

This example demonstrates the concepts described here and develops an input file for the Python program rve_mpc_generator.py. See Fig. 3 for the setup. The analysis is linear-elastic for simplicity. Extension for nonlinear behavior does not alter the constraints generated by the program.

The model has 8 solid elements (8-node isoparametrics); 4 link elements (no link elements for Abaqus); 27 nodes for the prism; 4 dummy-node pairs (8 total nodes); and a linear-elastic material.

Figure 4 lists the node coordinates and element connectivities.

The prism dimensions are $L_x = 1, L_y = 2, L_z = 4$ to emphasize that imposed strains are multiplied by these sizes to obtain corresponding imposed displacements. The macroscale strain tensor is

$$\bar{\boldsymbol{\varepsilon}} = \begin{bmatrix} \bar{\varepsilon}_{11} & \bar{\varepsilon}_{12} & \bar{\varepsilon}_{13} \\ \bar{\varepsilon}_{21} & \bar{\varepsilon}_{22} & \bar{\varepsilon}_{23} \\ \bar{\varepsilon}_{31} & \bar{\varepsilon}_{32} & \bar{\varepsilon}_{33} \end{bmatrix} = \begin{bmatrix} 0.1 & 0.2 & 0.5 \\ 0.2 & 0.0 & 0.3 \\ 0.5 & 0.3 & 0.0 \end{bmatrix} \tag{11}$$

where values are chosen for convenience to make obvious the results are correct.

One dummy-node pair and link element for each non-zero strain component are defined (here the macroscale shear strains are symmetric). The (2,2) and (3,3) strain values could be non-zero with addition of 2 more link elements and 2 more dummy-node pairs.

Coordinates for dummy nodes 28-35 are set at 10.0 10.0 10.0. The values are immaterial and do not affect the solution. Link element stiffnesses are set at 10^{10} – preliminary analyses showed this value is sufficient to make displacements at both nodes of link elements identical.

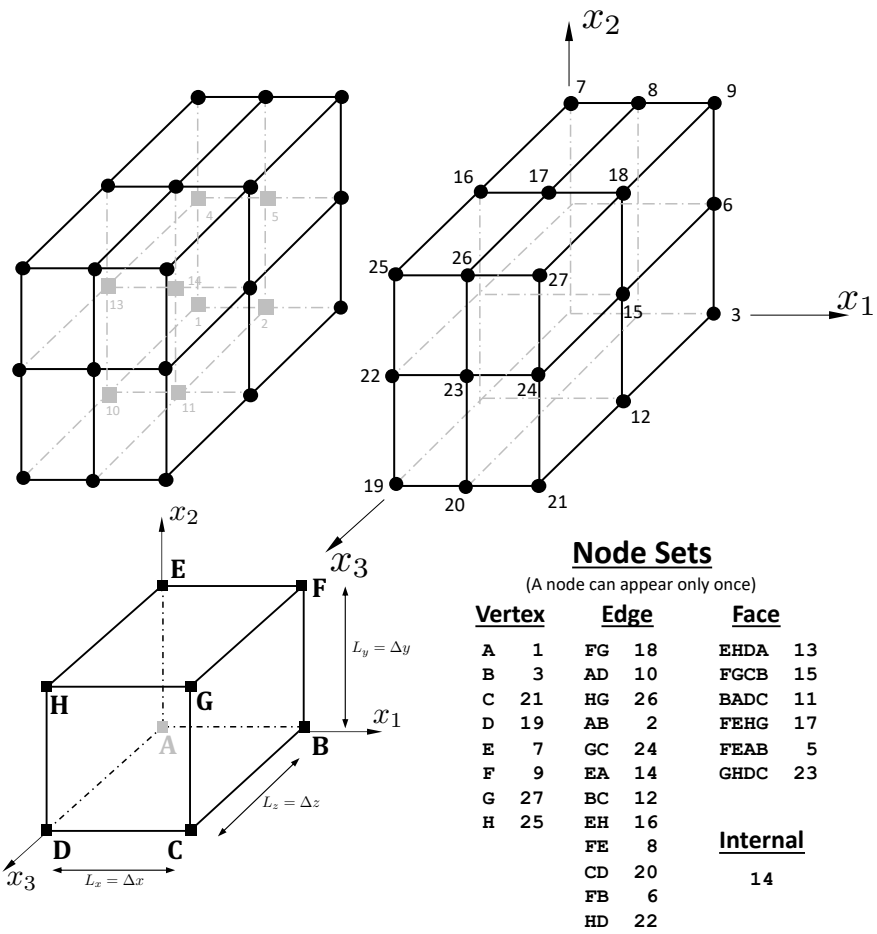

Fig. 3. Small example problem to illustrate setup and use of the rve_mpc_generator.py Python program.

The complete WARP3D input file is shown in Fig. 5. Figure 5a shows the included file of constraints data.

The complete Abaqus input file is shown in Fig. 8. The input can be simplified with *INCLUDE commands for models with many thousands of nodes, elements *EQUATIONs, etc.

9.1 User generation of constraints

For this simple problem, it is feasible to generate the absolute and MPC constraints manually. The next section uses the Python script.

Recommended steps:

- Decide upon absolute constraints to prevent 3 rigid-body translations and 3 rotations (rigid-body constraints). For the loading in Eq. (11), only node 1 needs to be constrained ($u = v = w = 0$). The non-zero imposed displacements (from strains $\bar{\varepsilon}_{ij}$) are sufficient to prevent the three rigid-rotations.

- Start with all equations in Table 1. Eliminate all the zero terms from the zero imposed $\bar{\varepsilon}_{ij}$ values and constraints to remove rigid-body motions.

Coordinates

1	0.0	0.0	0.0
2	0.5	0.0	0.0
3	1.0	0.0	0.0
4	0.0	1.0	0.0
5	0.5	1.0	0.0
6	1.0	1.0	0.0
7	0.0	2.0	0.0
8	0.5	2.0	0.0
9	1.0	2.0	0.0
10	0.0	0.0	2.0
11	0.5	0.0	2.0
12	1.0	0.0	2.0
13	0.0	1.0	2.0
14	0.5	1.0	2.0
15	1.0	1.0	2.0
16	0.0	2.0	2.0
17	0.5	2.0	2.0
18	1.0	2.0	2.0
19	0.0	0.0	4.0
20	0.5	0.0	4.0
21	1.0	0.0	4.0
22	0.0	1.0	4.0
23	0.5	1.0	4.0
24	1.0	1.0	4.0
25	0.0	2.0	4.0
26	0.5	2.0	4.0
27	1.0	2.0	4.0
28	10	10	10
29	10	10	10
30	10	10	10
31	10	10	10
32	10	10	10
33	10	10	10
34	10	10	10
35	10	10	10

Dummy nodes

Incidences

1	1	2	5	4	10	11	14	13
2	2	3	6	5	11	12	15	14
3	4	5	8	7	13	14	17	16
4	5	6	9	8	14	15	18	17
5	10	11	14	13	19	20	23	22
6	11	12	15	14	20	21	24	23
7	13	14	17	16	22	23	26	25
8	14	15	18	17	23	24	27	26
9	28	29						
10	30	31						
11	32	33						
12	34	35						

Link2 elements

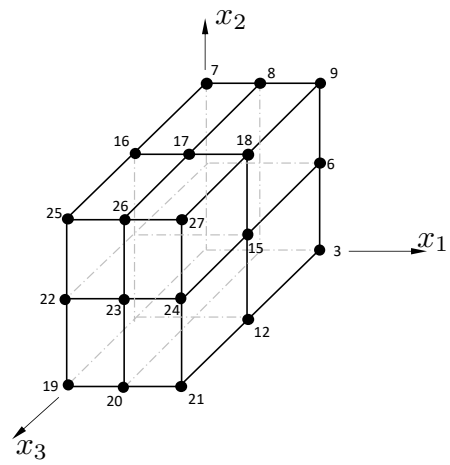

Fig. 4. Coordinates and incidences for the mesh. For Abaqus, omit the Link2 elements. Put this data into a file named coords_incid.inp for WARP3D input.

- Some of the MPCs to enforce the periodic boundary conditions may then have only 1 term remaining. The MPC has become an absolute constraint and must be included with them in the constraints. In WARP3D input, absolute constraints may not be intermixed with MPCs.

  In Abaqus, MPCs are part of the model definition (*EQUATION); the absolute constraints are part of the modeling loading (*BOUNDARY).

The imposed displacements for dummy-node loading become:

$$
\begin{aligned}
&\text{Node 29}: \quad u = 0.1,\ v = 0.0,\ w = 0.0 \ \leftarrow \bar{\epsilon}_{11} \\
&\text{Node 31}: \quad u = 0.2,\ v = 0.2,\ w = 0.0 \ \leftarrow \bar{\epsilon}_{12} = \bar{\epsilon}_{21} \\
&\text{Node 33}: \quad u = 0.5,\ v = 0.0,\ w = 0.5 \ \leftarrow \bar{\epsilon}_{13} = \bar{\epsilon}_{31} \\
&\text{Node 35}: \quad u = 0.0,\ v = 0.3,\ w = 0.3 \ \leftarrow \bar{\epsilon}_{23} = \bar{\epsilon}_{32}
\end{aligned}
\tag{12}
$$

```
material steel
    properties mises e 30000  nu 0.3 n_power 10 yld_pt 60.e10  $
linear-elastic
!
 material rve_link
     properties link stiff_link 1.0e10 mass_link 0.0
!
 structure prism
!
 number of nodes 35 elements 12
!
 elements
    1-8 type l3disop linear material steel order 2x2x2 bbar,
                          center_output short
    9 10 11 12 type link2 material rve_link
!
*echo off
 *input from file "coords_incid.inp"
*echo on
!
blocking automatic
!
  *input from file ″rve_constraints.inp"
!
 loading test
  nonlinear
    step 1 constraints 1.0
!
 nonlinear analysis parameters $ only those really needed here
   solution technique sparse direct
   time step 1.0e06
   maximum iterations 5 $ global Newton iterations
   minimum iterations 1
   convergence test norm res tol 0.001
   batch messages off
   trace solution on
!
 output model flat patran convention text file "model"
!
 compute displacements for loading test step  1
 output wide strains 1-8
 output wide stresses 1-12
 output wide displacements 1-35
 output flat text displacements     $ for ParaView visualization
 output flat text element stresses  $ for ParaView visualization
!
stop
```

Fig. 5. WARP3D input file for the example problem.

9.2 Constraints using rve_mpc_generator.py

Figure 6 shows the input file prepared to generate all constraints for the example problem. The required input for a very much larger model differs only in the nodal coordinates data.

At execution, the script requests the input file name, the file names for generated constraints data (WARP3D, Abaqus, or both) and whether or not the symbolic form of all the MPC equations should be printed as comment lines in the constraints data file – useful for understanding the conversion of all MPCs in Table 1 for the model.

Figure 7 shows the generated constraints file in form for direct input to WARP3D.

```
 constraints
  1 u 0.0 v 0.0 w 0.0
  29 u 0.1
  31 u 0.2 v 0.2
  33 u 0.5 w 0.5
  35 v 0.3 w 0.3
!
 multipoint
  15 1.0 u  - 13 1.0 u  - 28 1.0 u = 0.
  15 1.0 v  - 13 1.0 v  - 30 1.0 v = 0.
  15 1.0 w  - 13 1.0 w  - 32 1.0 w = 0.
  17 1.0 u  - 11 1.0 u  - 30 2.0 u = 0.
  17 1.0 v  - 11 1.0 v = 0.
  17 1.0 w  - 11 1.0 w  - 34 2.0 w = 0.
  23 1.0 u  - 5 1.0 u  - 32 4.0 u = 0.
  23 1.0 v  - 5 1.0 v  - 34 4.0 v = 0.
  23 1.0 w  - 5 1.0 w = 0.
  18 1.0 u  - 10 1.0 u  - 28 1.0 u  - 30 2.0 u = 0.
  18 1.0 v  - 10 1.0 v  - 30 1.0 v = 0.
  18 1.0 w  - 10 1.0 w  - 32 1.0 w  - 34 2.0 w = 0.
  12 1.0 u  - 16 1.0 u  - 28 1.0 u  + 30 2.0 u = 0.
  12 1.0 v  - 16 1.0 v  - 30 1.0 v = 0.
  12 1.0 w  - 16 1.0 w  - 32 1.0 w  + 34 2.0 w = 0.
  24 1.0 u  - 4 1.0 u  - 28 1.0 u  - 32 4.0 u = 0.
  24 1.0 v  - 4 1.0 v  - 30 1.0 v  - 34 4.0 v = 0.
  24 1.0 w  - 4 1.0 w  - 32 1.0 w = 0.
  6 1.0 u  - 22 1.0 u  - 28 1.0 u  + 32 4.0 u = 0.
  6 1.0 v  - 22 1.0 v  - 30 1.0 v  + 34 4.0 v = 0.
  6 1.0 w  - 22 1.0 w  - 32 1.0 w = 0.
  26 1.0 u  - 2 1.0 u  - 30 2.0 u  - 32 4.0 u = 0.
  26 1.0 v  - 2 1.0 v  - 34 4.0 v = 0.
  26 1.0 w  - 2 1.0 w  - 34 2.0 w = 0.
  8 1.0 u  - 20 1.0 u  - 30 2.0 u  + 32 4.0 u = 0.
  8 1.0 v  - 20 1.0 v  + 34 4.0 v = 0.
  8 1.0 w  - 20 1.0 w  - 34 2.0 w = 0.
  27 1.0 u  - 28 1.0 u  - 30 2.0 u  - 32 4.0 u = 0.
  27 1.0 v  - 30 1.0 v  - 34 4.0 v = 0.
  27 1.0 w  - 32 1.0 w  - 34 2.0 w = 0.
  9 1.0 u  - 19 1.0 u  - 28 1.0 u  - 30 2.0 u  + 32 4.0 u = 0.
  9 1.0 v  - 19 1.0 v  - 30 1.0 v  + 34 4.0 v = 0.
  9 1.0 w  - 19 1.0 w  - 32 1.0 w  - 34 2.0 w = 0.
```

Fig. 5a. Manually prepared constraints input file.

```
#
#  comment lines begin with # in column 1
#  all text beyond a # within a line is treated as comment
#
#  number of nodes, elements # do not include dummy nodes/links
#  number of elements not actually used.
#
 27, 8
#
#  Lx, Ly, Lz  # dimensions of the rectangle prism RVE mesh
#
 1.0, 2.0, 4.0
#
#  Vertex nodes of mesh: A, B, C, D, E, F, G. See notes for ordering
#
1, 3, 21, 19, 7, 9, 27, 25
#
#  3x3 **usually** a symmetric** strain tensor. See notes for non-symmetric
#  Symmetric version conforms to usual tensor definition of strains.
#
0.1  0.2  0.5  #   eps_xx,  eps_xy,  eps_xz
0.2  0.0  0.3  #   eps_xy,  eps_yy,  eps_yz
0.5  0.3  0.0  #   eps_xz,  eps_yz,  eps_zz
#
#  nodes with absolute constraints = 0 to suppress rigid-body motions.
#  the generated constraints file will include these
#
ABS_CONSTRAINTS 1 # just to prevent rigid body motions.
1 u v w
#
#        At most, 6 dummy node pairs are required to impose all
#        quantities of the strain tensor as the RVE loading:
#          1 dummy node pair each for eps_11, eps_22, eps_33
#          1 dummy node pair for eps_12, eps_21
#          1 dummy node pair for eps_13, eps_31
#          1 dummy node pair for eps_23, eps_32
#
#        Only those actually used need to be specified in the input here.
#
#        The script outputs additional absolute constraints to impose non-z
#        strain tensor values on the 2nd dummy node attached to link2 eleme
#
DUMMY_EPS_MAP 7        #  7 lines   < generated constraints>
        1 1 28  29 u   # eps_11 ->  sets node 29 u = eps_11 value
#
        1 2 30  31 u   # eps_12 ->  sets node 31 u = eps_12 value
        2 1 30  31 v   # eps_21 ->  sets node 31 v = eps_21 value
#
        1 3 32  33 u   # eps_13 ->  sets node 33 u = eps_13 value
        3 1 32  33 w   # eps_31 ->  sets node 33 w = eps_31 value
#
        2 3 34  35 v   # eps_23 ->  sets node 35 v = eps_23 value
        3 2 34  35 w   # eps_32 ->  sets node 35 w = eps_32 value
#
#          nodal x, y, z coordinates. must be sequential. script reads only
#          number of nodes listed above - set that number to *not* include
#          dummy nodes.
#
    1   0.0   0.0   0.0
    2   0.5   0.0   0.0
      ….
   27   1.0   2.0   4.0
```

Fig. 6. Input file for the rve_mpc_generator.py Python program

```
! ------------------------------------------------------------
! Enforced strain tensor eps_ij (row-wise):
!   row 1: 0.1  0.2  0.5
!   row 2: 0.2  0.0  0.3
!   row 3: 0.5  0.3  0.0
!
! Dummy strain mapping (eps_ij -> dummy_node, driver_node, dof):
!   eps_11 -> dummy 28 u,  driver 29 u
!   eps_12 -> dummy 30 u,  driver 31 u
!   eps_13 -> dummy 32 u,  driver 33 u
!   eps_21 -> dummy 30 v,  driver 31 v
!   eps_23 -> dummy 34 v,  driver 35 v
!   eps_31 -> dummy 32 w,  driver 33 w
!   eps_32 -> dummy 34 w,  driver 35 w
!
! --- ABSOLUTE CONSTRAINTS (must appear before 'multipoint') ---
constraints
  29 u 0.1
  31 u 0.2
  31 v 0.2
  33 u 0.5
  33 w 0.5
  35 v 0.3
  35 w 0.3
  1 u 0.0
  1 v 0.0
  1 w 0.0
!
multipoint
  15 1.0 u  - 13 1.0 u  - 28 1.0 u = 0.
  15 1.0 v  - 13 1.0 v  - 30 1.0 v = 0.
  15 1.0 w  - 13 1.0 w  - 32 1.0 w = 0.
  17 1.0 u  - 11 1.0 u  - 30 2.0 u = 0.
  17 1.0 v  - 11 1.0 v = 0.
  17 1.0 w  - 11 1.0 w  - 34 2.0 w = 0.
  23 1.0 u  - 5 1.0 u  - 32 4.0 u = 0.
  23 1.0 v  - 5 1.0 v  - 34 4.0 v = 0.
  23 1.0 w  - 5 1.0 w = 0.
  18 1.0 u  - 10 1.0 u  - 28 1.0 u  - 30 2.0 u = 0.
      …  same as Figure 5a    …
  25 1.0 w  - 3 1.0 w  + 32 1.0 w  - 34 2.0 w = 0.
  21 1.0 u  - 7 1.0 u  - 28 1.0 u  + 30 2.0 u  - 32 4.0 u = 0.
  21 1.0 v  - 7 1.0 v  - 30 1.0 v  - 34 4.0 v = 0.
  21 1.0 w  - 7 1.0 w  - 32 1.0 w  + 34 2.0 w = 0.
!
! Total zero absolute constraints (final, incl. implied): 3
! Total driver constraints (from eps_ij): 7
! Total MPC equations emitted: 39
! ------------------------------------------------------------
```

Fig. 7. Output file of WARP3D constraints data generated by the script.

```
*HEADING
**PREPRINT,HISTORY=NO,ECHO=no,MODEL=NO,CONTACT=NO
*NODE, SYSTEM=R, NSET=NALL
 1,   0.0,  0.0,  0.0
 2,   0.5,  0.0,  0.0
 3,   1.0,  0.0,  0.0
 4,   0.0,  1.0,  0.0
 5,   0.5,  1.0,  0.0
 6,   1.0,  1.0,  0.0
 7,   0.0,  2.0,  0.0
 8,   0.5,  2.0,  0.0
 9,   1.0,  2.0,  0.0
10,   0.0,  0.0,  2.0
11,   0.5,  0.0,  2.0
12,   1.0,  0.0,  2.0
13,   0.0,  1.0,  2.0
14,   0.5,  1.0,  2.0
15,   1.0,  1.0,  2.0
16,   0.0,  2.0,  2.0
17,   0.5,  2.0,  2.0
18,   1.0,  2.0,  2.0
19,   0.0,  0.0,  4.0
20,   0.5,  0.0,  4.0
21,   1.0,  0.0,  4.0
22,   0.0,  1.0,  4.0
23,   0.5,  1.0,  4.0
24,   1.0,  1.0,  4.0
25,   0.0,  2.0,  4.0
26,   0.5,  2.0,  4.0
27,   1.0,  2.0,  4.0
28, 10., 10., 10.
29, 10., 10., 10.
30, 10., 10., 10.
31, 10., 10., 10.
32, 10., 10., 10.
33, 10., 10., 10.
34, 10., 10., 10.
35, 10., 10., 10.
**
**
*ELEMENT,TYPE=C3D8  ,ELSET=eall
    1,    1,    2,    5,    4,   10,   11,   14,   13
    2,    2,    3,    6,    5,   11,   12,   15,   14
    3,    4,    5,    8,    7,   13,   14,   17,   16
    4,    5,    6,    9,    8,   14,   15,   18,   17
    5,   10,   11,   14,   13,   19,   20,   23,   22
    6,   11,   12,   15,   14,   20,   21,   24,   23
    7,   13,   14,   17,   16,   22,   23,   26,   25
    8,   14,   15,   18,   17,   23,   24,   27,   26
**
*SOLID SECTION,ELSET=EALL,MATERIAL=steel
*MATERIAL,NAME=steel
*elastic
30000., 0.30
```

Fig. 8. Complete input file for Abaqus solution of the example problem. See continuing pages.

```
** --- DUMMY LINK TIES-
*EQUATION
2
28, 1, 1.0
29, 1, -1.0
*EQUATION
2
28, 2, 1.0
29, 2, -1.0
*EQUATION
2
28, 3, 1.0
29, 3, -1.0
*EQUATION
2
30, 1, 1.0
31, 1, -1.0
*EQUATION
2
30, 2, 1.0
31, 2, -1.0
*EQUATION
2
30, 3, 1.0
31, 3, -1.0
*EQUATION
2
32, 1, 1.0
33, 1, -1.0
*EQUATION
2
32, 2, 1.0
33, 2, -1.0
*EQUATION
2
32, 3, 1.0
33, 3, -1.0
*EQUATION
2
34, 1, 1.0
35, 1, -1.0
*EQUATION
2
34, 2, 1.0
35, 2, -1.0
*EQUATION
2
34, 3, 1.0
35, 3, -1.0
**
```

```
**
** --- MULTI-POINT
CONSTRAINTS (*EQUATION) ---
**
** --- FACE MPCs (direction
X) ---
*EQUATION
3
15, 1, 1.0
13, 1, -1.0
28, 1, -1.0
*EQUATION
3
15, 2, 1.0
13, 2, -1.0
30, 2, -1.0
*EQUATION
3
15, 3, 1.0
13, 3, -1.0
32, 3, -1.0
** --- FACE MPCs (direction
Y) ---
*EQUATION
3
17, 1, 1.0
11, 1, -1.0
30, 1, -2.0
*EQUATION
2
17, 2, 1.0
11, 2, -1.0
*EQUATION
3
17, 3, 1.0
11, 3, -1.0
34, 3, -2.0
** --- FACE MPCs (direction
Z) ---
*EQUATION
3
23, 1, 1.0
5, 1, -1.0
32, 1, -4.0
*EQUATION
3
23, 2, 1.0
5, 2, -1.0
34, 2, -4.0
```

Fig. 8 (cont'd). Complete input file for Abaqus solution of the example problem. See continuing pages.

```
*EQUATION
2
23, 3, 1.0
5, 3, -1.0
** --- EDGE MPCs (type X-Y
(-+)/(+-)) ---
*EQUATION
4
12, 1, 1.0
16, 1, -1.0
28, 1, -1.0
30, 1, 2.0
*EQUATION
3
12, 2, 1.0
16, 2, -1.0
30, 2, -1.0
*EQUATION
4
12, 3, 1.0
16, 3, -1.0
32, 3, -1.0
34, 3, 2.0
** --- EDGE MPCs (type X-Y
(--)/(++)) ---
*EQUATION
4
18, 1, 1.0
10, 1, -1.0
28, 1, -1.0
30, 1, -2.0
*EQUATION
3
18, 2, 1.0
10, 2, -1.0
30, 2, -1.0
*EQUATION
4
18, 3, 1.0
10, 3, -1.0
32, 3, -1.0
34, 3, -2.0
** --- EDGE MPCs (type X-Z
(-+)/(+-)) ---
*EQUATION
4
6, 1, 1.0
22, 1, -1.0
28, 1, -1.0
32, 1, 4.0
*EQUATION
4
6, 2, 1.0
22, 2, -1.0
30, 2, -1.0
34, 2, 4.0
*EQUATION
3
6, 3, 1.0
22, 3, -1.0
32, 3, -1.0
** --- EDGE MPCs (type X-Z
(--)/(++)) ---
*EQUATION
4
24, 1, 1.0
4, 1, -1.0
28, 1, -1.0
32, 1, -4.0
*EQUATION
4
24, 2, 1.0
4, 2, -1.0
30, 2, -1.0
34, 2, -4.0
*EQUATION
3
24, 3, 1.0
4, 3, -1.0
32, 3, -1.0
** --- EDGE MPCs (type Y-Z
(-+)/(+-)) ---
*EQUATION
4
8, 1, 1.0
20, 1, -1.0
30, 1, -2.0
32, 1, 4.0
*EQUATION
3
8, 2, 1.0
20, 2, -1.0
34, 2, 4.0
*EQUATION
3
8, 3, 1.0
20, 3, -1.0
34, 3, -2.0
```

Fig. 8 (cont'd). Complete input file for Abaqus solution of the example problem. See continuing pages.

```
** --- EDGE MPCs (type Y-Z
(--)/(++)) ---
*EQUATION
4
26, 1, 1.0
2, 1, -1.0
30, 1, -2.0
32, 1, -4.0
*EQUATION
3
26, 2, 1.0
2, 2, -1.0
34, 2, -4.0
*EQUATION
3
26, 3, 1.0
2, 3, -1.0
34, 3, -2.0
** --- VERTEX MPCs (body
diagonals) ---
*EQUATION
4
27, 1, 1.0
28, 1, -1.0
30, 1, -2.0
32, 1, -4.0
*EQUATION
3
27, 2, 1.0
30, 2, -1.0
34, 2, -4.0
*EQUATION
3
27, 3, 1.0
32, 3, -1.0
34, 3, -2.0
*EQUATION
5
9, 1, 1.0
19, 1, -1.0
28, 1, -1.0
30, 1, -2.0
32, 1, 4.0
*EQUATION
4
9, 2, 1.0
19, 2, -1.0
30, 2, -1.0
34, 2, 4.0
*EQUATION
4
9, 3, 1.0
19, 3, -1.0
32, 3, -1.0
34, 3, -2.0
*EQUATION
5
25, 1, 1.0
3, 1, -1.0
28, 1, 1.0
30, 1, -2.0
32, 1, -4.0
*EQUATION
4
25, 2, 1.0
3, 2, -1.0
30, 2, 1.0
34, 2, -4.0
*EQUATION
4
25, 3, 1.0
3, 3, -1.0
32, 3, 1.0
34, 3, -2.0
*EQUATION
5
21, 1, 1.0
7, 1, -1.0
28, 1, -1.0
30, 1, 2.0
32, 1, -4.0
*EQUATION
4
21, 2, 1.0
7, 2, -1.0
30, 2, -1.0
34, 2, -4.0
*EQUATION
4
21, 3, 1.0
7, 3, -1.0
32, 3, -1.0
34, 3, 2.0
```

Fig. 8 (cont'd). Complete input file for Abaqus solution of the example problem. See continuing pages.

```
*****************Start Step 1 -----------------------------------
*STEP,AMPLITUDE=RAMP,INC=1
Step 1
*STATIC
1,1
**
** Enforced strain tensor eps_ij (row-wise):
**   row 1: 0.1  0.2  0.5
**   row 2: 0.2  0.0  0.3
**   row 3: 0.5  0.3  0.0
**
** Dummy strain mapping (eps_ij -> dummy_node, driver_node, dof):
**   eps_11 -> dummy 28 u,  driver 29 u
**   eps_12 -> dummy 30 u,  driver 31 u
**   eps_13 -> dummy 32 u,  driver 33 u
**   eps_21 -> dummy 30 v,  driver 31 v
**   eps_23 -> dummy 34 v,  driver 35 v
**   eps_31 -> dummy 32 w,  driver 33 w
**   eps_32 -> dummy 34 w,  driver 35 w
**
** --- BOUNDARY (absolute constraints) ---
*BOUNDARY
29, 1, 1, 0.1
31, 1, 1, 0.2
31, 2, 2, 0.2
33, 1, 1, 0.5
33, 3, 3, 0.5
35, 2, 2, 0.3
35, 3, 3, 0.3
1, 1, 1, 0.0
1, 2, 2, 0.0
1, 3, 3, 0.0
**
** Total zero absolute constraints (final, incl. implied): 3
** Total driver constraints (from eps_ij): 7
** Total MPC equations emitted: 39
** ------------------------------------------------------------
**
**
*node print,freq=1,nset=nall
u,
*el print,freq=1,elset=eall
s
*END STEP
```

Fig. 8 (cont'd). Complete input file for Abaqus solution of the example problem. This is last page of figure.