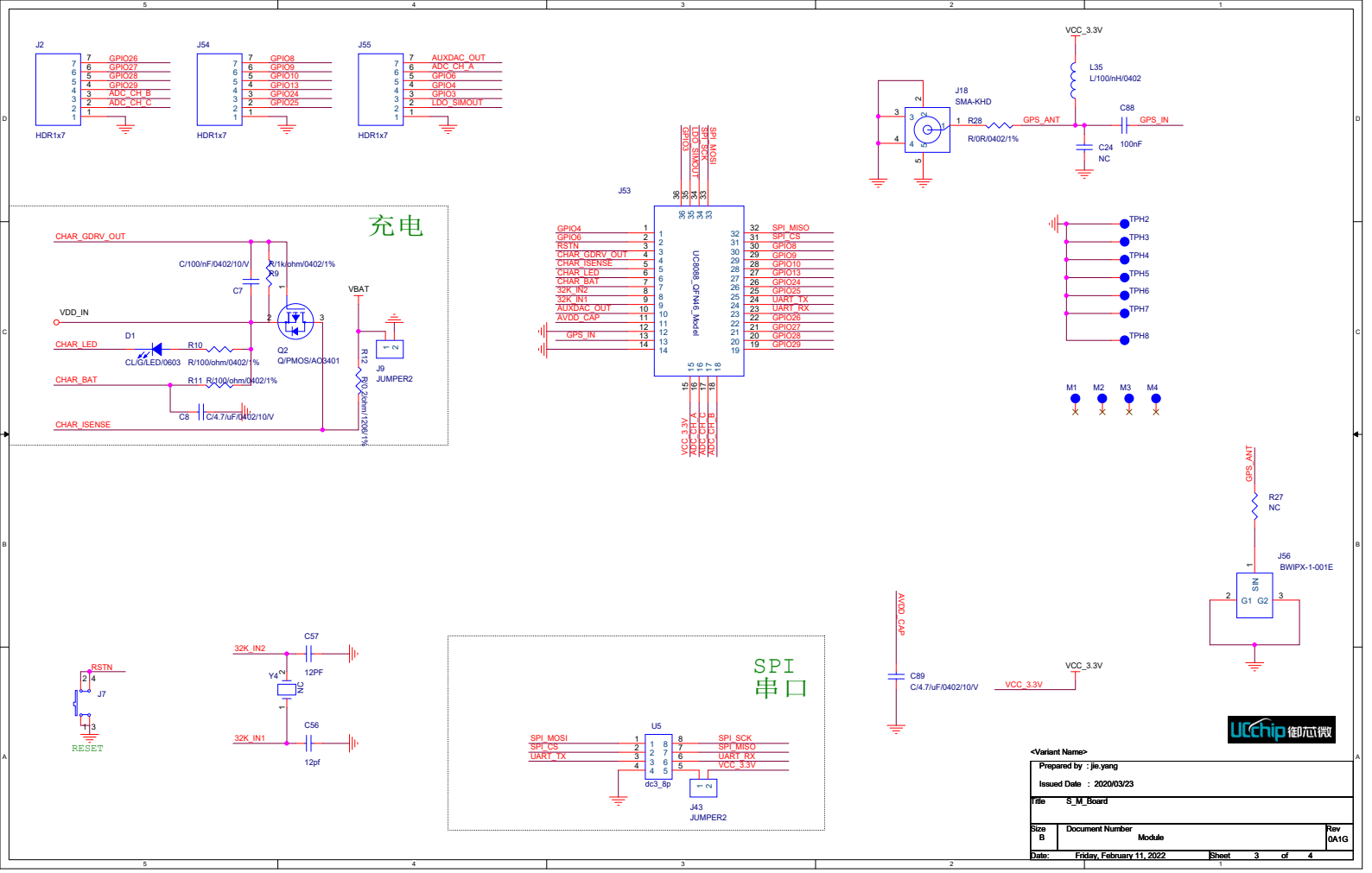
J2
HDR1x7
GPIO26
GPIO27
GPIO28
GPIO29
ADC_CH_B
ADC_CH_C
J54
HDR1x7
GPIO8
GPIO9
GPIO10
GPIO13
GPIO24
GPIO25
J55
HDR1x7
AUXDAC_OUT
ADC_CH_A
GPIO6
GPIO4
GPIO3
LDO_SIMOUT
VCC_3.3V
L35
L/100/nH/0402
J18
SMA-KHD
R28
R/0R/0402/1%
GPS_ANT
C88
100nF
GPS_IN
C24
NC
J53
UC8088_QFN48_Module
GPIO4
GPIO6
RSTN
CHAR_GDRV_OUT
CHAR_ISENSE
CHAR_LED
CHAR_BAT
32K_IN2
32K_IN1
AUXDAC_OUT
AVDD_CAP
GPS_IN
SPI_MISO
SPI_CS
GPIO8
GPIO9
GPIO10
GPIO13
GPIO24
GPIO25
UART_TX
UART_RX
GPIO26
GPIO27
GPIO28
GPIO29
GPIO5
SPI_SCK
LDO_SIMOUT
SPI_MOSI
VCC_3.3V
ADC_CH_A
ADC_CH_C
ADC_CH_B
TPH2
TPH3
TPH4
TPH5
TPH6
TPH7
TPH8
M1
M2
M3
M4
充电
CHAR_GDRV_OUT
C/100/nF/0402/10/V
R/1k/ohm/0402/1%
R9
C7
VDD_IN
D1
CL/G/LED/0603
CHAR_LED
R10
R/100/ohm/0402/1%
Q2
Q/PMOS/AO3401
VBAT
R12
R/0.2ohm/1206/1%
J9
JUMPER2
CHAR_BAT
R11
R/100/ohm/0402/1%
C8
C/4.7/uF/0402/10/V
CHAR_ISENSE
GPS_ANT
R27
NC
J56
BWIPX-1-001E
SIN
G1
G2
AVDD_CAP
C89
C/4.7/uF/0402/10/V
VCC_3.3V
RSTN
J7
RESET
C57
32K_IN2
12PF
Y4
32K_IN1
C56
12pf
SPI
串口
U5
SPI_MOSI
SPI_CS
UART_TX
SPI_SCK
SPI_MISO
UART_RX
VCC_3.3V
dc3_8p
J43
JUMPER2
UCChip 御芯微
<Variant Name>
Prepared by : jie.yang
Issued Date : 2020/03/23
Title S_M_Board
Size B
Document Number
Module
Rev 0A1G
Date: Friday, February 11, 2022
Sheet 3 of 4

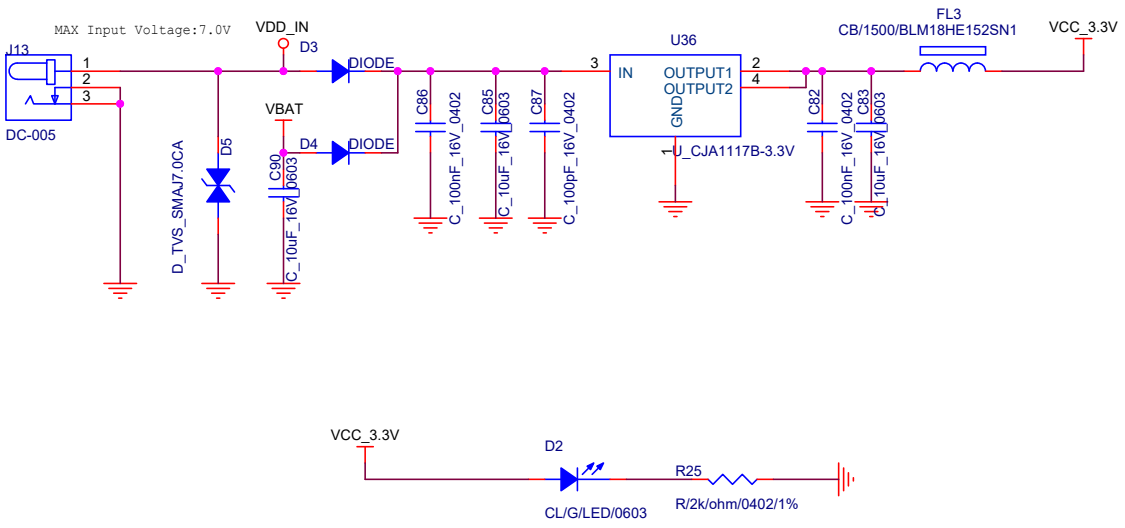

Title	<Title>	
Size A	Document Number <Doc>	Rev 0A1G
Date: Thursday, February 10, 2022	Sheet 4 of 4	