LS1B DEMO BOARD
Schematic Revision 2.0

Title	Page
COVER SHEET	1
BLOCK DIAGRAM	2
LS1B DDR2	3
LS1B MAC&USB&SPI&UART	4
LS1B NAND&RTC	5
LS1B VIDEO&AC97	6
LS1B POWER	7
DDR2 64M&TERMINATORS	8
MAC PHY0	9
MAC PHY1	10
AC97	11
USB HUB	12
UART	13
MISC	14
POWER&HOLE	15
REVISION HISTORY	16

CPU
Loongson 1B

Onboard Chipset
AUDIO:ALC655
USB HUB:MW7220
NAND Flash:128MB
Flash Rom:SPI 4Bit
PHY IC:RTL8201EL-GR*2

Memory
DDRII 64M/16bit 133MHz

Expansion Interface
AD:2Channel 12bit
LCD:24bit/40 Pin
UART:3Line/6
MicroSD:SPI

广州龙芯电子科技有限公司

Release Date: 2011.09

广州龙芯电子科技有限公司
广州大学城外环东路232号13栋

项目名称	LS1B SOC DEMO BOARD		
Size: Custom	Document Number: COVER SHEET		Rev: 2.0
Date: Thursday, February 02, 2012		Sheet 1 of 16	

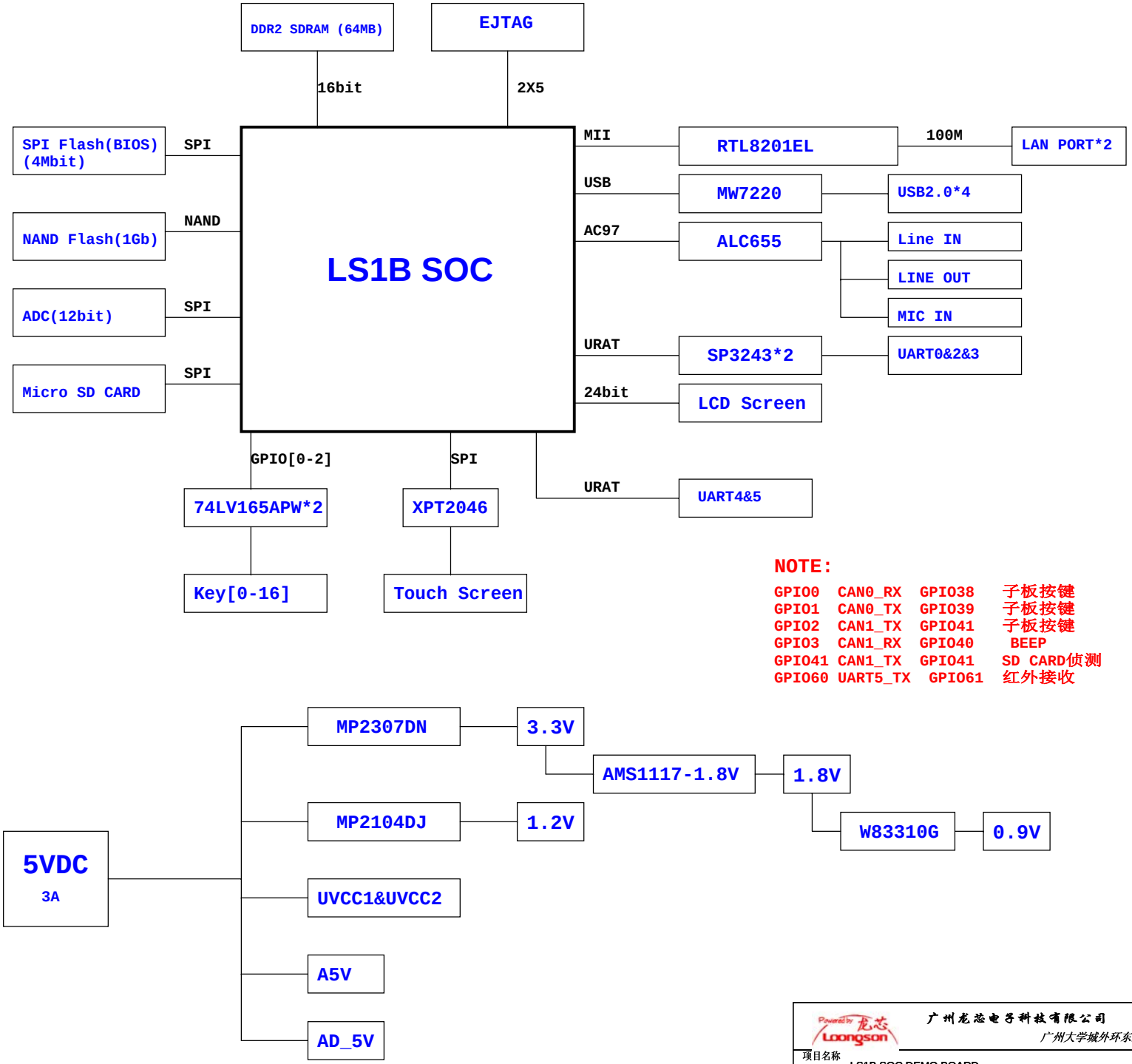

NOTE:

GPIO0	CAN0_RX	GPIO38	子板按键
GPIO1	CAN0_TX	GPIO39	子板按键
GPIO2	CAN1_TX	GPIO41	子板按键
GPIO3	CAN1_RX	GPIO40	BEEP
GPIO41	CAN1_TX	GPIO41	SD CARD侦测
GPIO60	UART5_TX	GPIO61	红外接收

广州龙芯电子科技有限公司
广州大学城外环东路232号13栋

项目名称	LS1B SOC DEMO BOARD		
Size: Custom	Document Number: BLOCK DIAGRAM		Rev: 2.0
Date: Monday, December 05, 2011		Sheet 2 of 16	

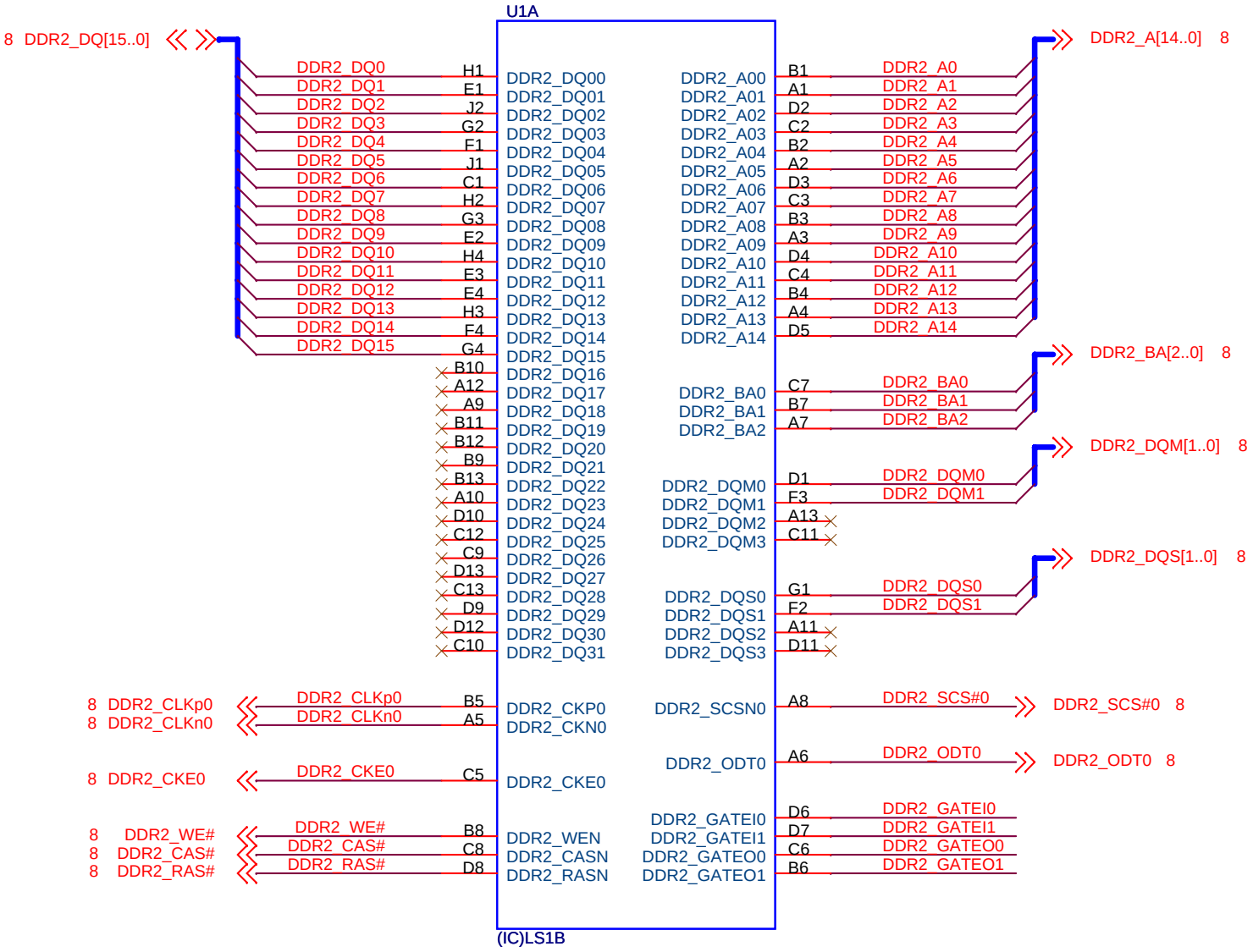

广州龙芯电子科技有限公司

广州大学城外环东路232号13栋

项目名称 LS1B SOC DEMO BOARD		
Size Custom	Document Number LS1B DDR2	Rev 2.0
Date: Thursday, December 15, 2011	Sheet 3 of 16	

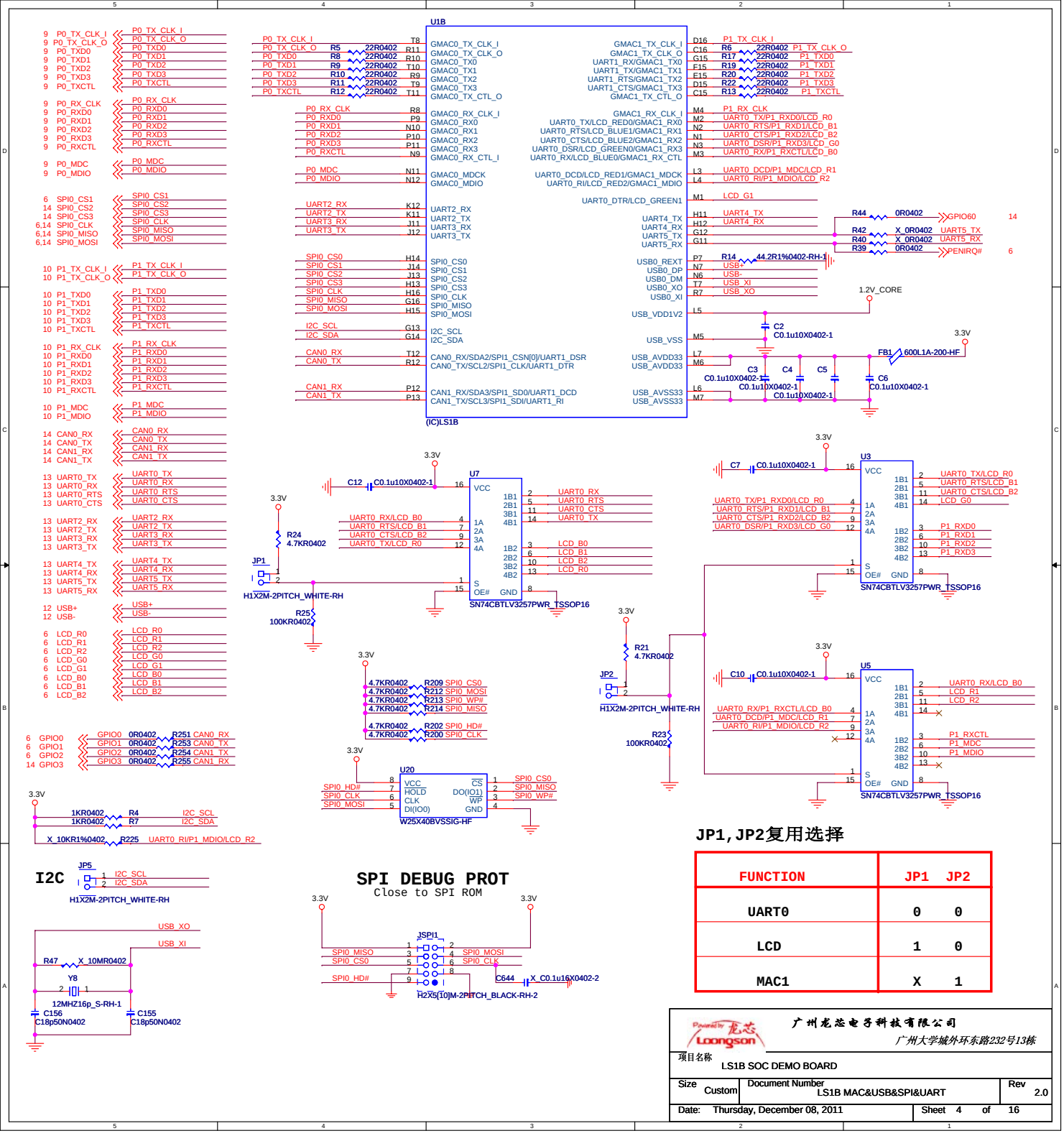
U1B
(IC)LS1B
U7
U3
U5
U20
SN74CBTLV3257PWR_TSSOP16
W25X40BVSSIG-HF
JP1
JP2
JP5
JSPI1
H1X2M-2PITCH_WHITE-RH
H2X5(10)M-2PITCH_BLACK-RH-2
SPI DEBUG PROT
Close to SPI ROM
I2C
JP1,JP2复用选择
FUNCTION
JP1
JP2
UART0
0
0
LCD
1
0
MAC1
X
1
广州龙芯电子科技有限公司
广州大学城外环东路232号13栋
项目名称
LS1B SOC DEMO BOARD
Size
Custom
Document Number
LS1B MAC&USB&SPI&UART
Rev
2.0
Date:
Thursday, December 08, 2011
Sheet
4
of
16

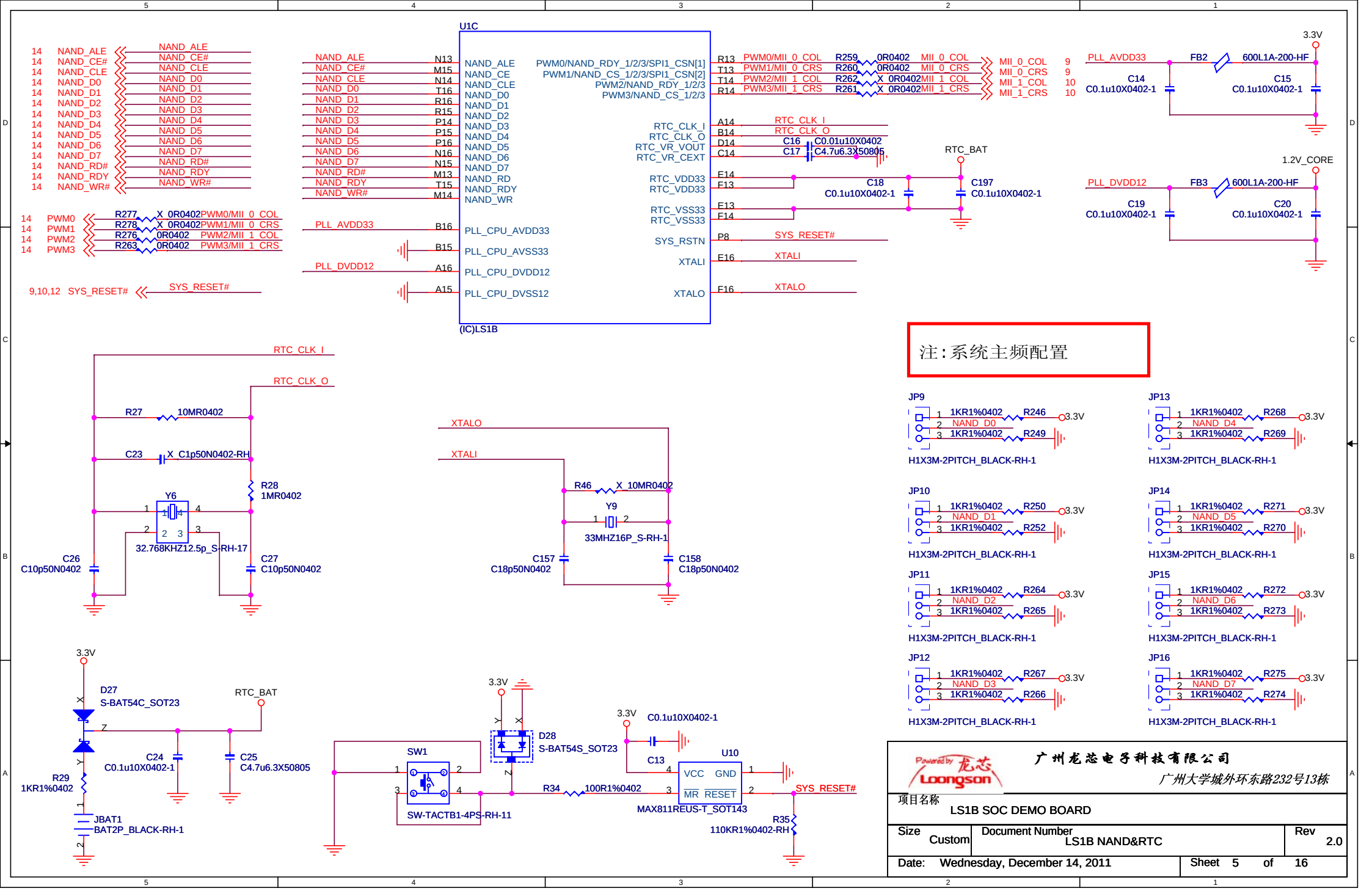
U1C
(IC)LS1B
NAND_ALE
NAND_CE#
NAND_CLE
NAND_D0
NAND_D1
NAND_D2
NAND_D3
NAND_D4
NAND_D5
NAND_D6
NAND_D7
NAND_RD#
NAND_RDY
NAND_WR#
PWM0
PWM1
PWM2
PWM3
SYS_RESET#
PLL_AVDD33
PLL_DVDD12
PWM0/NAND_RDY_1/2/3/SPI1_CSN[1]
PWM1/NAND_CS_1/2/3/SPI1_CSN[2]
PWM2/NAND_RDY_1/2/3
PWM3/NAND_CS_1/2/3
RTC_CLK_I
RTC_CLK_O
RTC_VR_VOUT
RTC_VR_CEXT
RTC_VDD33
RTC_VSS33
SYS_RSTN
XTALI
XTALO
PLL_CPU_AVDD33
PLL_CPU_AVSS33
PLL_CPU_DVDD12
PLL_CPU_DVSS12
MII_0_COL
MII_0_CRS
MII_1_COL
MII_1_CRS
3.3V
1.2V_CORE
RTC_BAT
600L1A-200-HF
C0.1u10X0402-1
C0.01u10X0402
C4.7u6.3X50805
10MR0402
X_C1p50N0402-RH
32.768KHZ12.5p_S-RH-17
33MHZ16P_S-RH-1
S-BAT54C_SOT23
S-BAT54S_SOT23
BAT2P_BLACK-RH-1
SW-TACTB1-4PS-RH-11
MAX811REUS-T_SOT143
100R1%0402
110KR1%0402-RH
H1X3M-2PITCH_BLACK-RH-1
注:系统主频配置
广州龙芯电子科技有限公司
广州大学城外环东路232号13栋
LS1B SOC DEMO BOARD
LS1B NAND&RTC
Wednesday, December 14, 2011

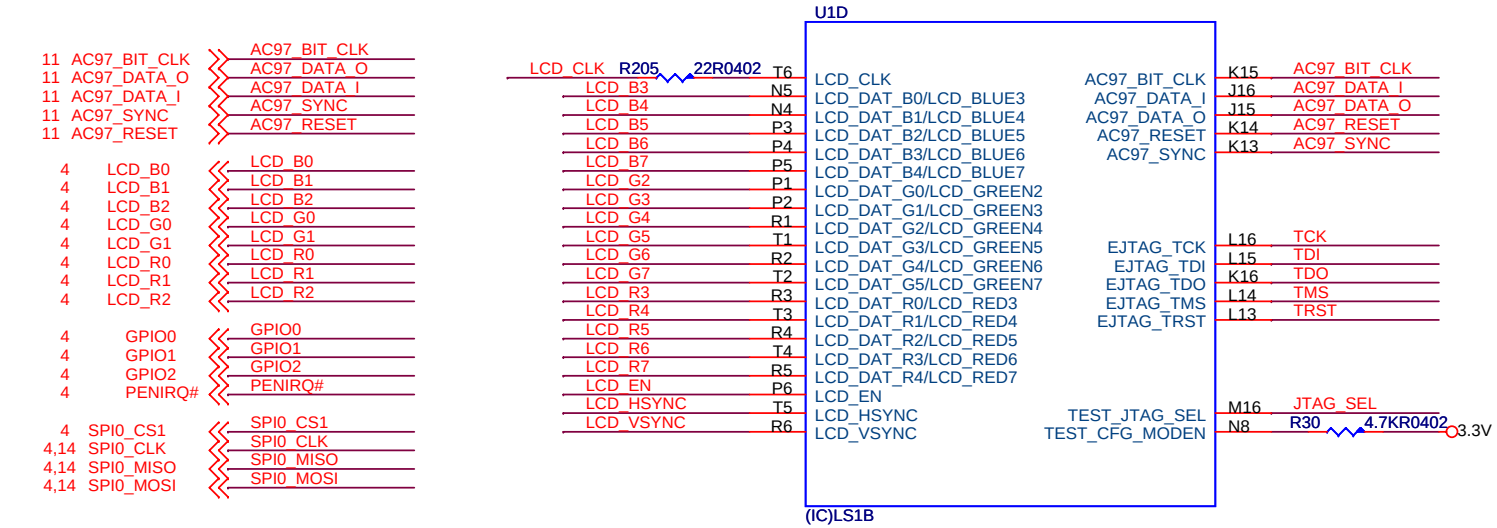

NATIVE LCD PORT 24bit

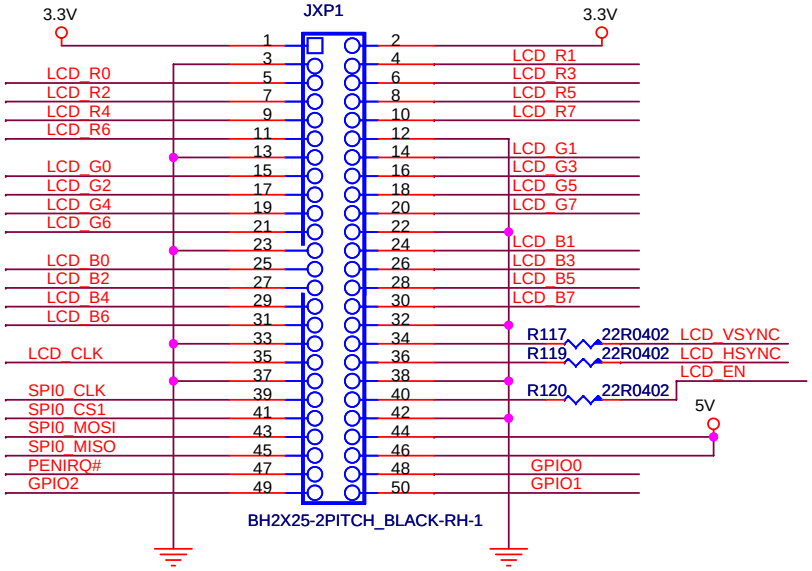

EJTAG

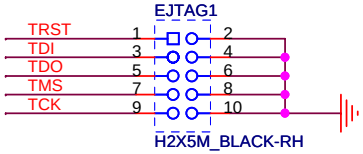

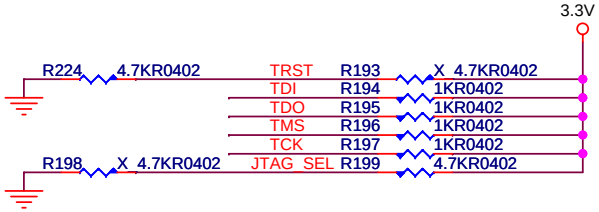

注：低位数据可能会无效，故拉低

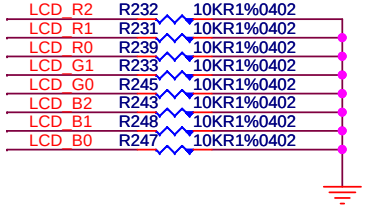

Powered by 龙芯 Loongson

广州龙芯电子科技有限公司

广州大学城外环东路232号13栋

项目名称 LS1B SOC DEMO BOARD		
Size Custom	Document Number LS1B VIDEO&AC97	Rev 2.0
Date: Thursday, December 08, 2011	Sheet 6 of 16	

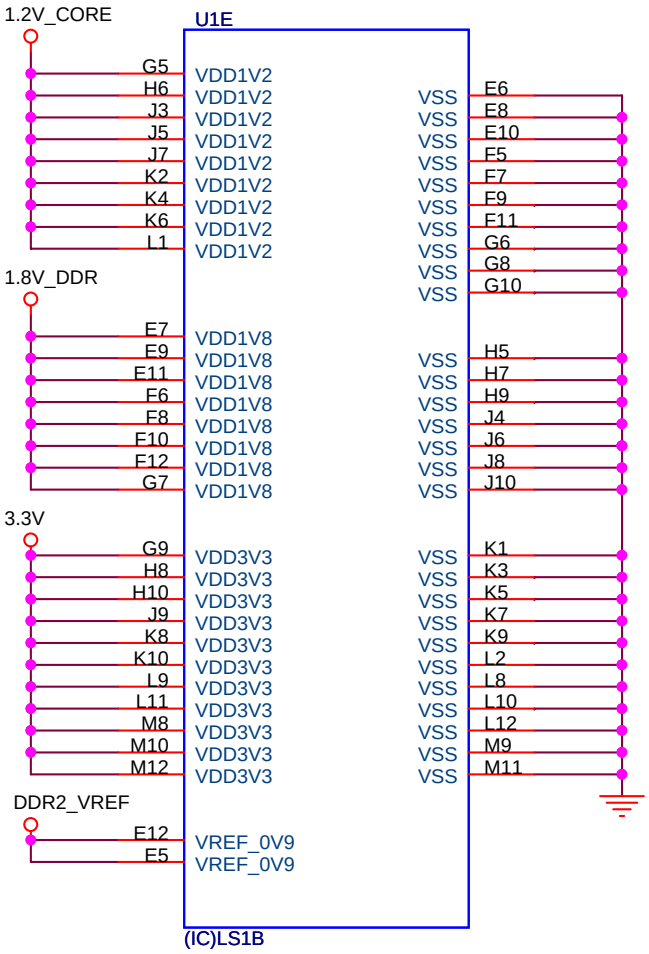

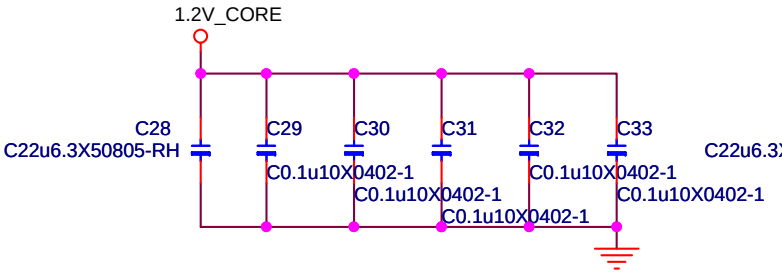

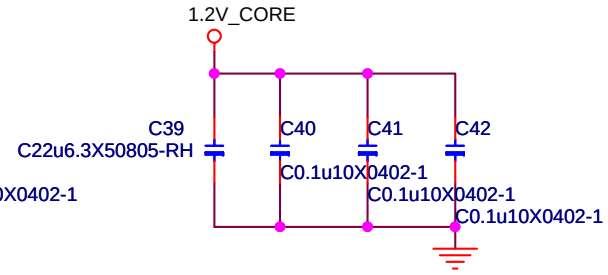

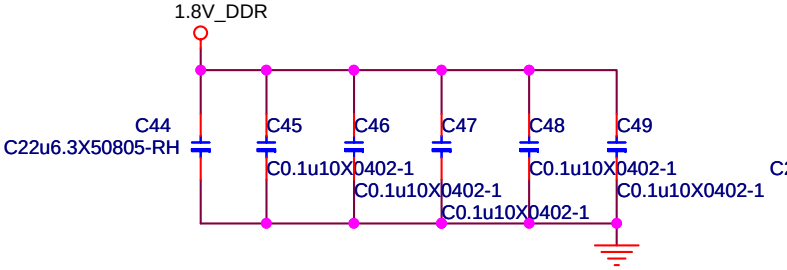

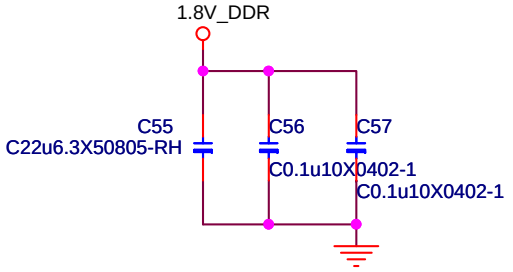

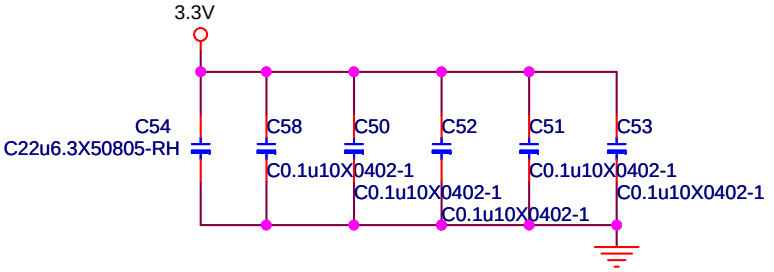

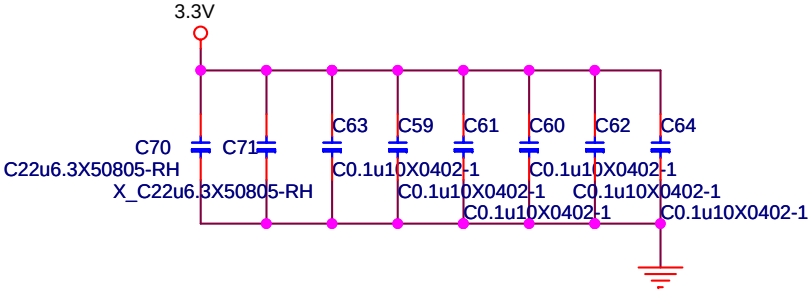

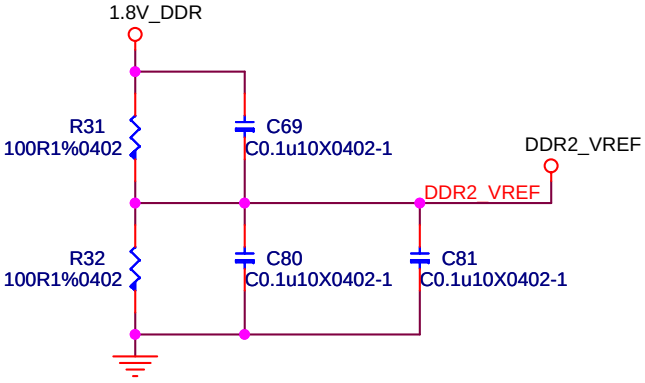

广州龙芯电子科技有限公司

广州大学城外环东路232号13栋

项目名称	LS1B SOC DEMO BOARD		
Size	Custom	Document Number LS1B POWER	Rev 2.0
Date:	Tuesday, November 22, 2011	Sheet 7 of 16	

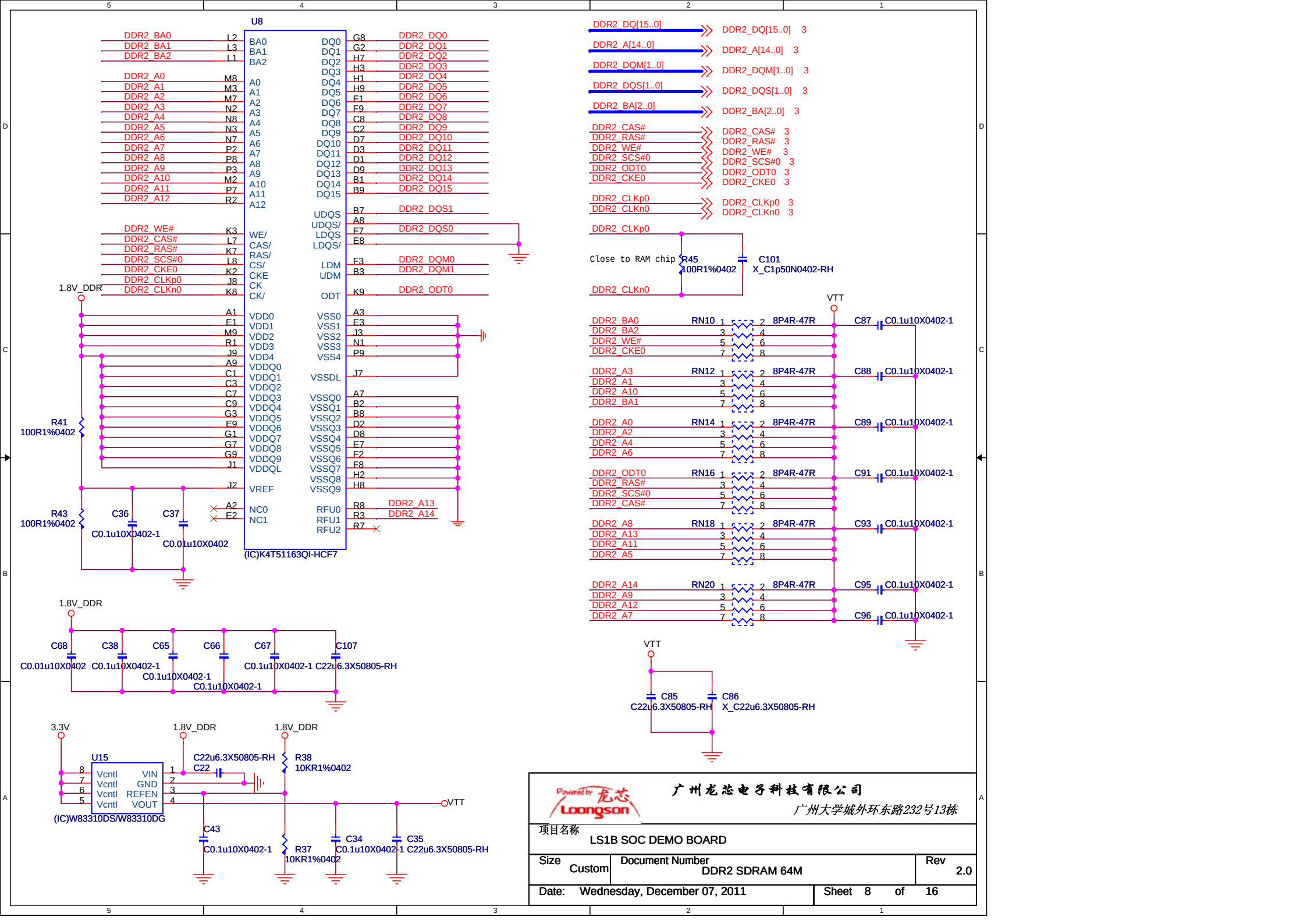

广州龙芯电子科技有限公司

广州大学城外环东路232号13栋

项目名称	LS1B SOC DEMO BOARD		
Size Custom	Document Number DDR2 SDRAM 64M		Rev 2.0
Date: Wednesday, December 07, 2011		Sheet 8 of 16	

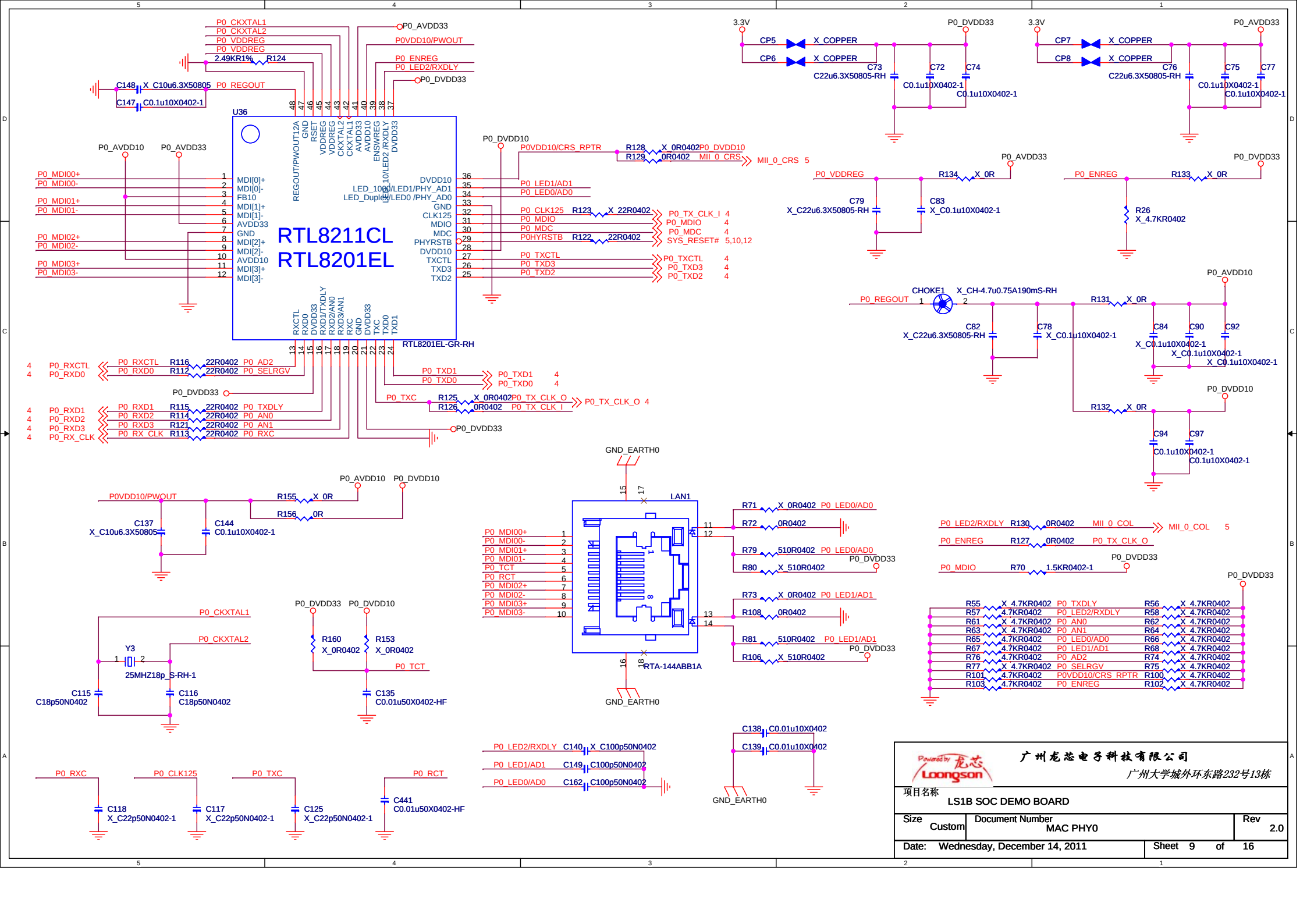

RTL8211CL
RTL8201EL
U36
RTL8201EL-GR-RH
LAN1
RTA-144ABB1A
CHOKE1
X_CH-4.7u0.75A190mS-RH
P0_CKXTAL1
P0_CKXTAL2
P0_VDDREG
P0_VDDREG
2.49KR1%
R124
P0_AVDD33
P0VDD10/PWOUT
P0_ENREG
P0_LED2/RXDLY
P0_DVDD33
C148 X_C10u6.3X50805
C147 C0.1u10X0402-1
P0_REGOUT
P0_AVDD10
P0_MDI00+
P0_MDI00-
P0_MDI01+
P0_MDI01-
P0_MDI02+
P0_MDI02-
P0_MDI03+
P0_MDI03-
P0VDD10/CRS_RPTR
R128 X_0R0402 P0_DVDD10
R129 0R0402 MII_0_CRS
MII_0_CRS 5
P0_LED1/AD1
P0_LED0/AD0
P0_CLK125 R123 X_22R0402
P0_MDIO
P0_MDC
P0HYRSTB R122 22R0402
P0_TX_CLK_I 4
P0_MDIO 4
P0_MDC 4
SYS_RESET# 5,10,12
P0_TXCTL
P0_TXD3
P0_TXD2
P0_TXCTL 4
P0_TXD3 4
P0_TXD2 4
P0_RXCTL
P0_RXD0
R116 22R0402 P0_AD2
R112 22R0402 P0_SELRGV
P0_TXD1
P0_TXD0
P0_TXD1 4
P0_TXD0 4
P0_TXC
R125 X_0R0402 P0_TX_CLK_O
R126 0R0402 P0_TX_CLK_I
P0_TX_CLK_O 4
P0_RXD1
P0_RXD2
P0_RXD3
P0_RX_CLK
R115 22R0402 P0_TXDLY
R114 22R0402 P0_AN0
R121 22R0402 P0_AN1
R113 22R0402 P0_RXC
P0_RXC
P0_CLK125
P0_TXC
P0_RCT
C118 X_C22p50N0402-1
C117 X_C22p50N0402-1
C125 X_C22p50N0402-1
C441 C0.01u50X0402-HF
P0_LED2/RXDLY C140 X_C100p50N0402
P0_LED1/AD1 C149 C100p50N0402
P0_LED0/AD0 C162 C100p50N0402
C138 C0.01u10X0402
C139 C0.01u10X0402
GND_EARTH0
P0_MDI00+
P0_MDI00-
P0_MDI01+
P0_MDI01-
P0_TCT
P0_RCT
P0_MDI02+
P0_MDI02-
P0_MDI03+
P0_MDI03-
R71 X_0R0402 P0_LED0/AD0
R72 0R0402
R79 510R0402 P0_LED0/AD0
R80 X_510R0402
R73 X_0R0402 P0_LED1/AD1
R108 0R0402
R81 510R0402 P0_LED1/AD1
R106 X_510R0402
P0_LED2/RXDLY R130 0R0402 MII_0_COL
MII_0_COL 5
P0_ENREG R127 0R0402 P0_TX_CLK_O
P0_MDIO R70 1.5KR0402-1
R55 X_4.7KR0402 P0_TXDLY
R57 4.7KR0402 P0_LED2/RXDLY
R61 X_4.7KR0402 P0_AN0
R63 X_4.7KR0402 P0_AN1
R65 4.7KR0402 P0_LED0/AD0
R67 4.7KR0402 P0_LED1/AD1
R76 4.7KR0402 P0_AD2
R77 X_4.7KR0402 P0_SELRGV
R101 4.7KR0402 P0VDD10/CRS_RPTR
R103 4.7KR0402 P0_ENREG
R56 X_4.7KR0402
R58 X_4.7KR0402
R62 X_4.7KR0402
R64 X_4.7KR0402
R66 X_4.7KR0402
R68 X_4.7KR0402
R74 X_4.7KR0402
R75 X_4.7KR0402
R100 X_4.7KR0402
R102 X_4.7KR0402
3.3V
CP5 X_COPPER
CP6 X_COPPER
CP7 X_COPPER
CP8 X_COPPER
C73 C22u6.3X50805-RH
C72 C0.1u10X0402-1
C74 C0.1u10X0402-1
C76 C22u6.3X50805-RH
C75 C0.1u10X0402-1
C77 C0.1u10X0402-1
P0_VDDREG
R134 X_0R
C79 X_C22u6.3X50805-RH
C83 X_C0.1u10X0402-1
P0_ENREG
R133 X_0R
R26 X_4.7KR0402
P0_REGOUT
C82 X_C22u6.3X50805-RH
C78 X_C0.1u10X0402-1
R131 X_0R
C84 X_C0.1u10X0402-1
C90 X_C0.1u10X0402-1
C92 X_C0.1u10X0402-1
R132 X_0R
C94 C0.1u10X0402-1
C97 C0.1u10X0402-1
P0_AVDD10
P0_DVDD10
P0VDD10/PWOUT
R155 X_0R
R156 0R
C137 X_C10u6.3X50805
C144 C0.1u10X0402-1
P0_CKXTAL1
P0_CKXTAL2
Y3
25MHZ18p_S-RH-1
C115 C18p50N0402
C116 C18p50N0402
R160 X_0R0402
R153 X_0R0402
P0_TCT
C135 C0.01u50X0402-HF
Powered by 龙芯 Loongson
广州龙芯电子科技有限公司
广州大学城外环东路232号13栋
项目名称
LS1B SOC DEMO BOARD
Size Custom
Document Number MAC PHY0
Rev 2.0
Date: Wednesday, December 14, 2011
Sheet 9 of 16

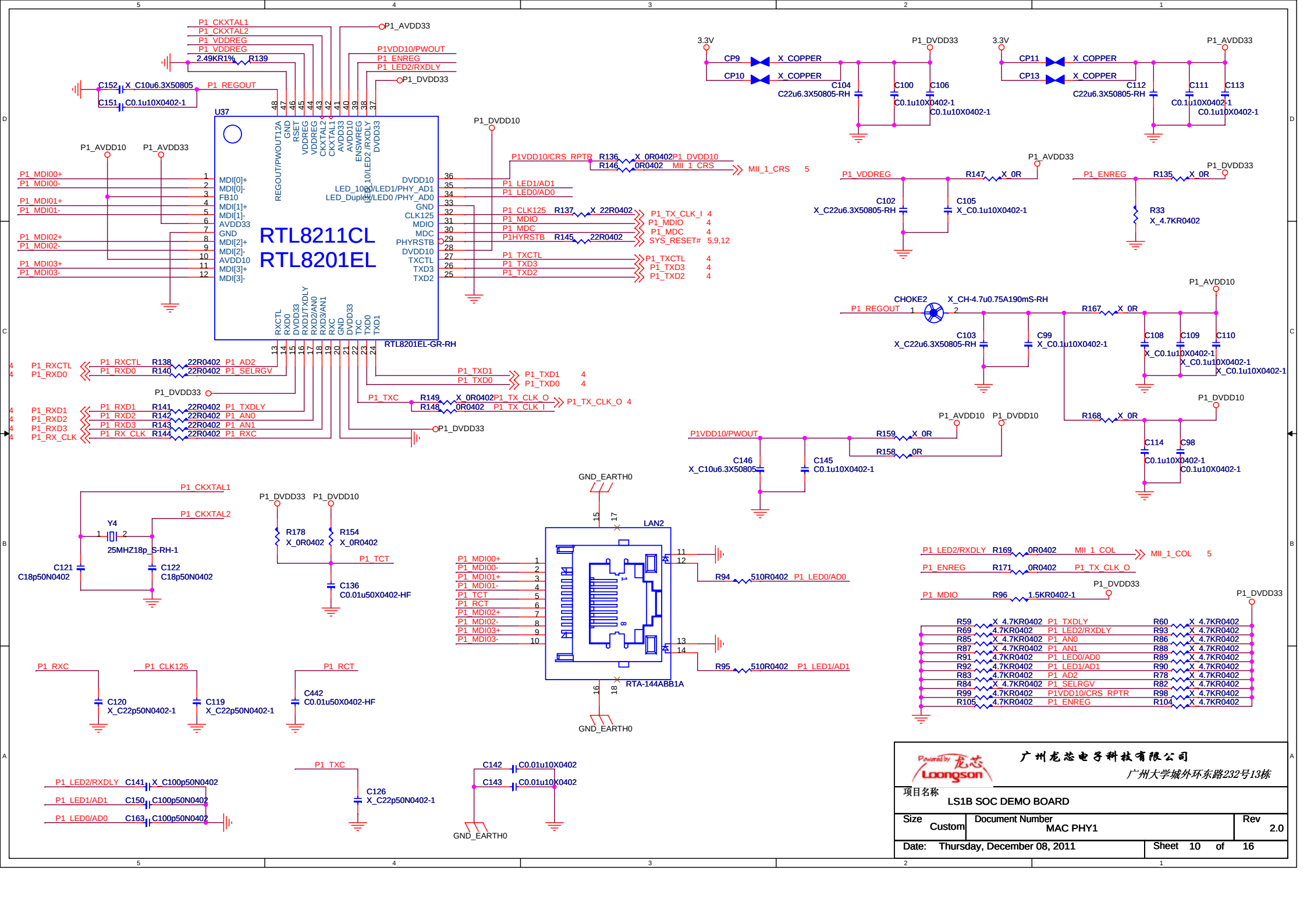
U37
RTL8211CL
RTL8201EL
RTL8201EL-GR-RH
P1_CKXTAL1
P1_CKXTAL2
P1_VDDREG
P1_VDDREG
2.49KR1%
R139
P1_AVDD33
P1VDD10/PWOUT
P1_ENREG
P1_LED2/RXDLY
P1_DVDD33
C152
X_C10u6.3X50805
C151
C0.1u10X0402-1
P1_REGOUT
P1_AVDD10
P1_AVDD33
P1_DVDD10
P1_MDI00+
P1_MDI00-
P1_MDI01+
P1_MDI01-
P1_MDI02+
P1_MDI02-
P1_MDI03+
P1_MDI03-
P1VDD10/CRS_RPTR
R136
X_0R0402
R146
0R0402
MII_1_CRS
P1_LED1/AD1
P1_LED0/AD0
P1_CLK125
R137
X_22R0402
P1_MDIO
P1_MDC
P1HYRSTB
R145
22R0402
P1_TXCTL
P1_TXD3
P1_TXD2
P1_RXCTL
P1_RXD0
R138
22R0402
P1_AD2
R140
P1_SELRGV
P1_TXD1
P1_TXD0
P1_TXC
R149
P1_TX_CLK_O
R148
P1_TX_CLK_I
P1_RXD1
P1_RXD2
P1_RXD3
P1_RX_CLK
R141
P1_TXDLY
R142
P1_AN0
R143
P1_AN1
R144
P1_RXC
3.3V
CP9
CP10
X_COPPER
C104
C22u6.3X50805-RH
C100
C106
C0.1u10X0402-1
CP11
CP13
C112
C111
C113
P1_VDDREG
R147
X_0R
C102
X_C22u6.3X50805-RH
C105
X_C0.1u10X0402-1
P1_ENREG
R135
R33
X_4.7KR0402
CHOKE2
X_CH-4.7u0.75A190mS-RH
C103
C99
C108
C109
C110
R167
R168
C146
X_C10u6.3X50805
C145
R159
R158
0R
C114
C98
Y4
25MHZ18p_S-RH-1
C121
C18p50N0402
C122
R178
R154
C136
C0.01u50X0402-HF
GND_EARTH0
LAN2
RTA-144ABB1A
R94
510R0402
R95
P1_LED2/RXDLY
R169
MII_1_COL
P1_TX_CLK_O
P1_MDIO
R96
1.5KR0402-1
R59
R69
R85
R87
R91
R92
R83
R84
R99
R105
R60
R93
R86
R88
R89
R90
R78
R82
R98
R104
4.7KR0402
X_4.7KR0402
C120
C119
C442
X_C22p50N0402-1
C0.01u50X0402-HF
P1_RXC
P1_CLK125
P1_RCT
P1_LED2/RXDLY
P1_LED1/AD1
P1_LED0/AD0
C141
C150
C163
X_C100p50N0402
C126
C142
C143
C0.01u10X0402
广州龙芯电子科技有限公司
广州大学城外环东路232号13栋
项目名称
LS1B SOC DEMO BOARD
Size
Custom
Document Number
MAC PHY1
Rev
2.0
Date:
Thursday, December 08, 2011
Sheet
10
of
16

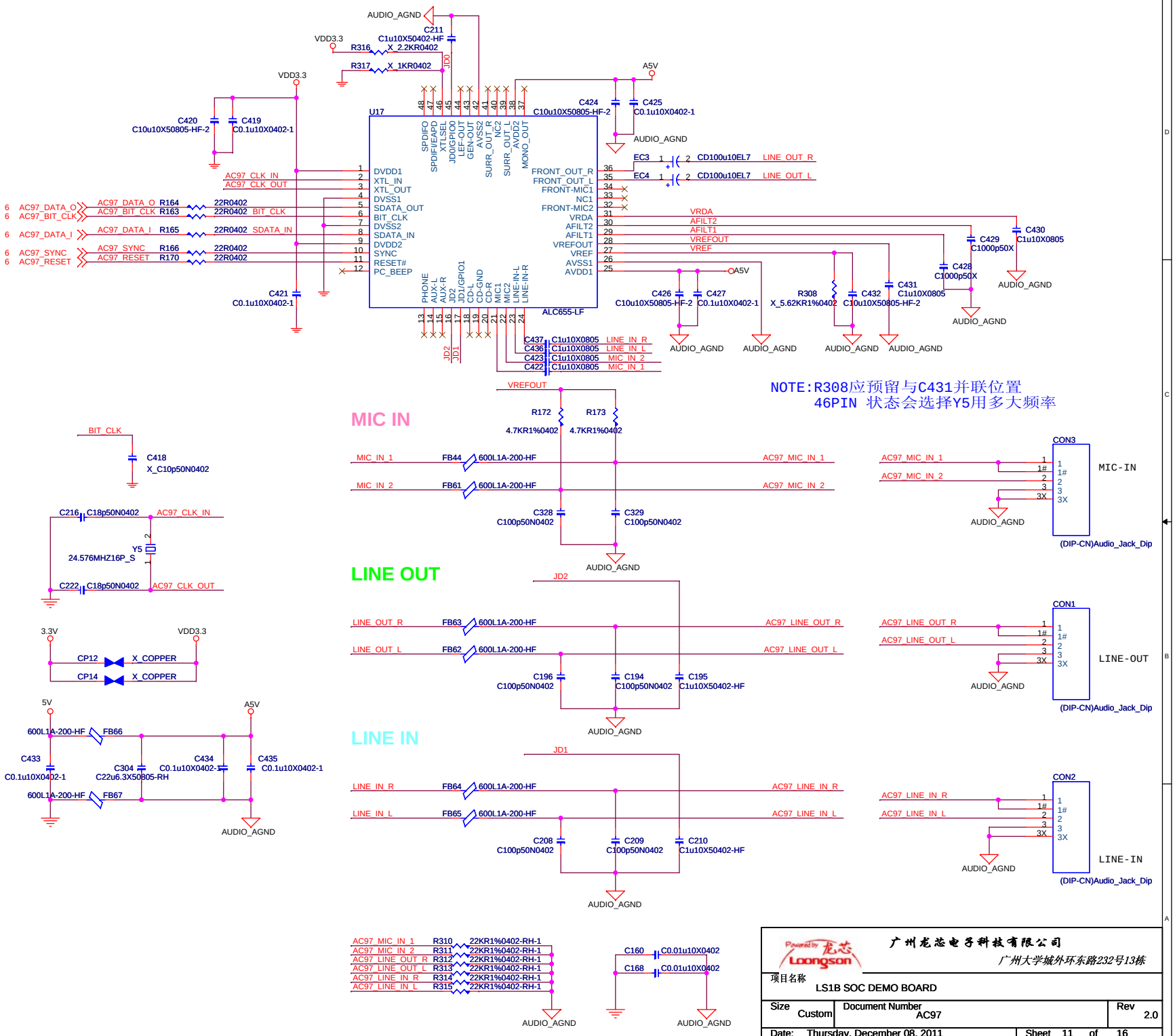

广州龙芯电子科技有限公司

广州大学城外环东路232号13栋

项目名称 LS1B SOC DEMO BOARD

Size	Document Number	Rev
Custom	AC97	2.0

Date: Thursday, December 08, 2011 Sheet 11 of 16

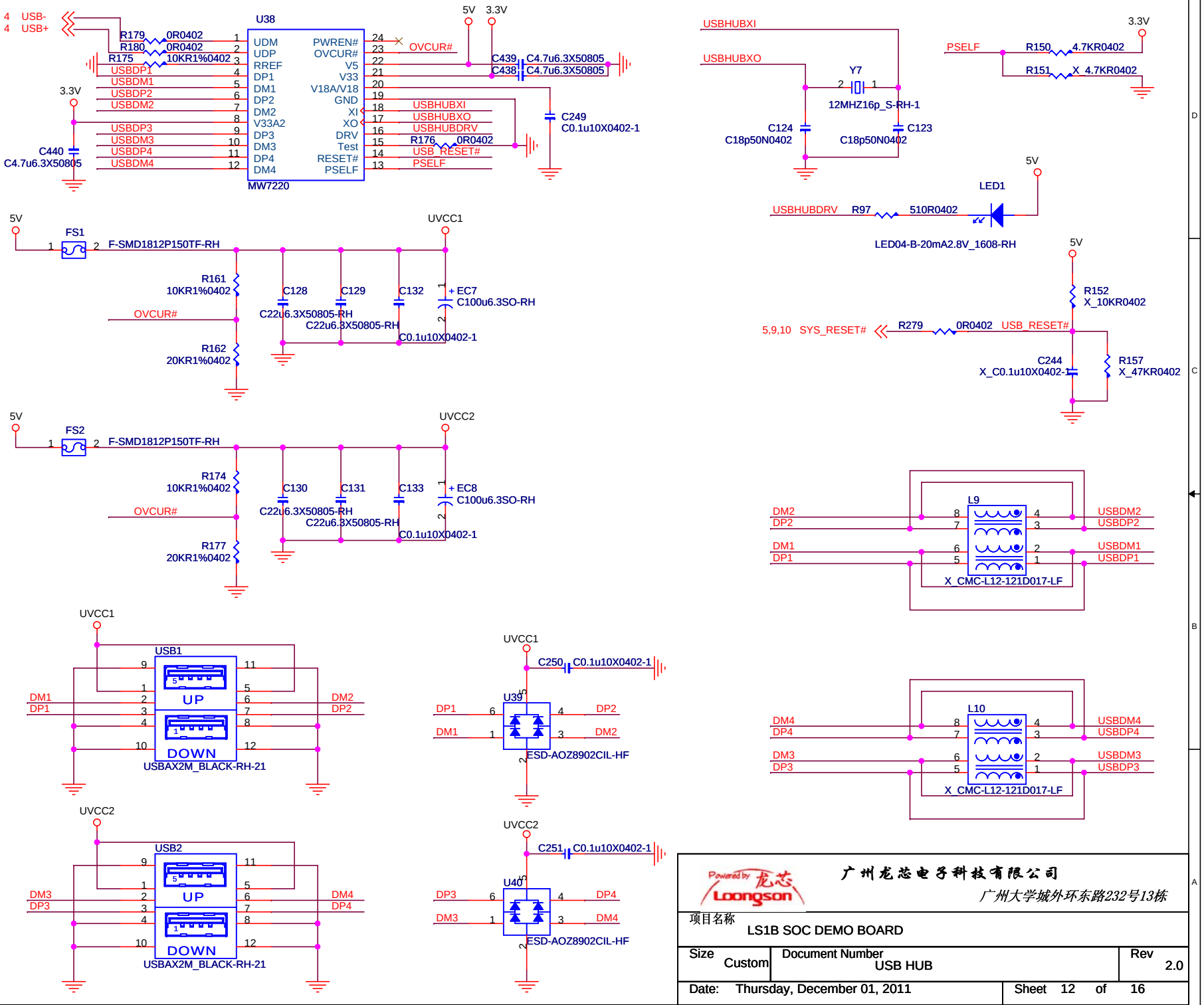
U38
MW7220
USBDP1
USBDM1
USBDP2
USBDM2
USBDP3
USBDM3
USBDP4
USBDM4
OVCUR#
USBHUBXI
USBHUBXO
USBHUBDRV
USB_RESET#
PSELF
C439 C4.7u6.3X50805
C438 C4.7u6.3X50805
C440 C4.7u6.3X50805
C249 C0.1u10X0402-1
R179 0R0402
R180 0R0402
R175 10KR1%0402
R176 0R0402
Y7
12MHZ16p_S-RH-1
C124 C18p50N0402
C123 C18p50N0402
R150 4.7KR0402
R151 X_4.7KR0402
LED1
R97 510R0402
LED04-B-20mA2.8V_1608-RH
FS1
FS2
F-SMD1812P150TF-RH
UVCC1
UVCC2
R161 10KR1%0402
R162 20KR1%0402
R174 10KR1%0402
R177 20KR1%0402
C128 C22u6.3X50805-RH
C129 C22u6.3X50805-RH
C132 C0.1u10X0402-1
C130 C22u6.3X50805-RH
C131 C22u6.3X50805-RH
C133 C0.1u10X0402-1
EC7 C100u6.3SO-RH
EC8 C100u6.3SO-RH
R152 X_10KR0402
R279 0R0402
C244 X_C0.1u10X0402-1
R157 X_47KR0402
5,9,10 SYS_RESET#
L9
L10
X_CMC-L12-121D017-LF
USB1
USB2
UP
DOWN
USBAX2M_BLACK-RH-21
U39
U40
ESD-AOZ8902CIL-HF
C250 C0.1u10X0402-1
C251 C0.1u10X0402-1
广州龙芯电子科技有限公司
广州大学城外环东路232号13栋
项目名称
LS1B SOC DEMO BOARD
Size Custom
Document Number USB HUB
Rev 2.0
Date: Thursday, December 01, 2011
Sheet 12 of 16

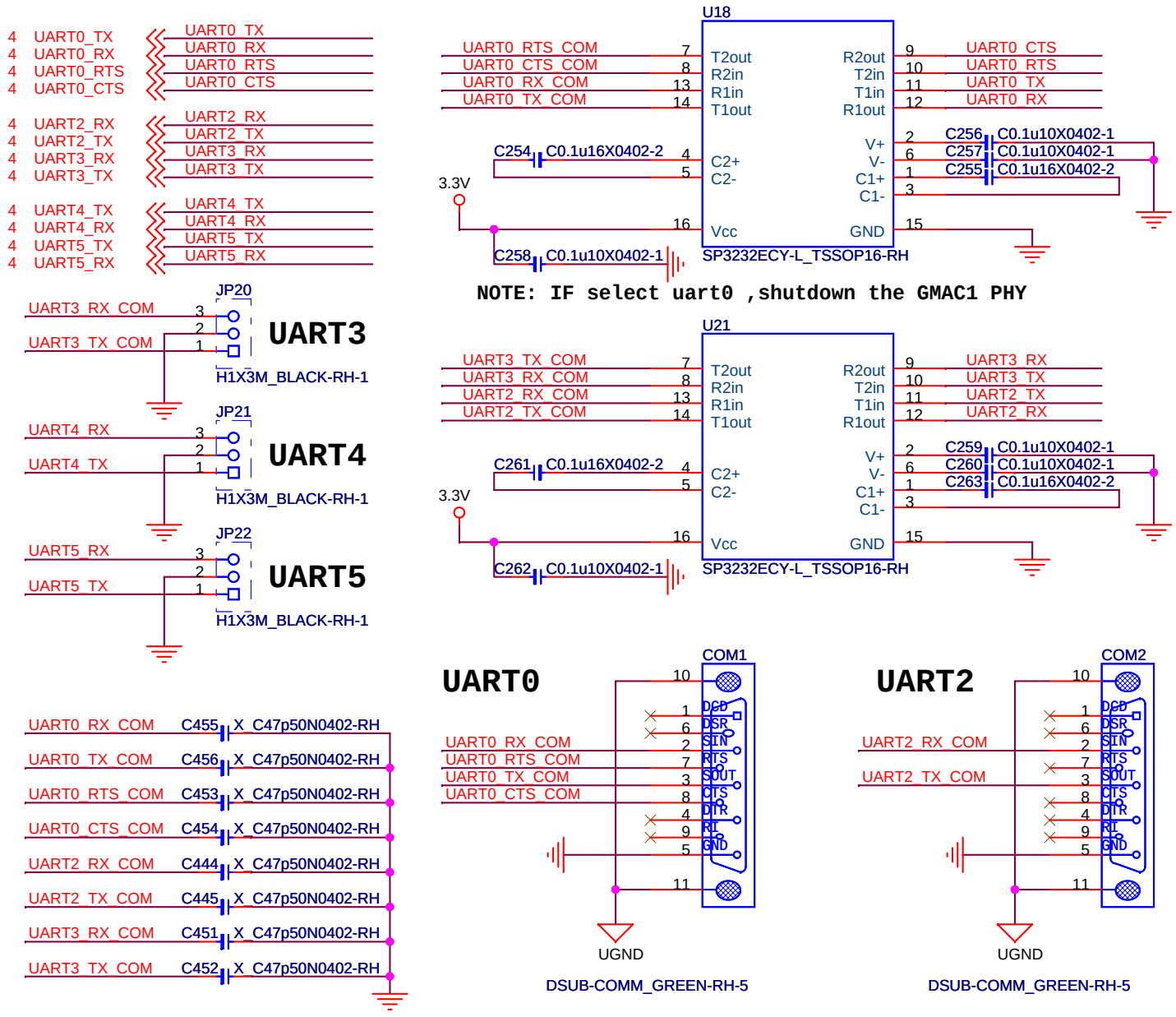

Powered by 龙芯 Loongson

广州龙芯电子科技有限公司

广州大学城外环东路232号13栋

项目名称 LS1B SOC DEMO BOARD		
Size Custom	Document Number UART&EJTAG	Rev 2.0
Date: Thursday, December 08, 2011	Sheet 13 of 16	

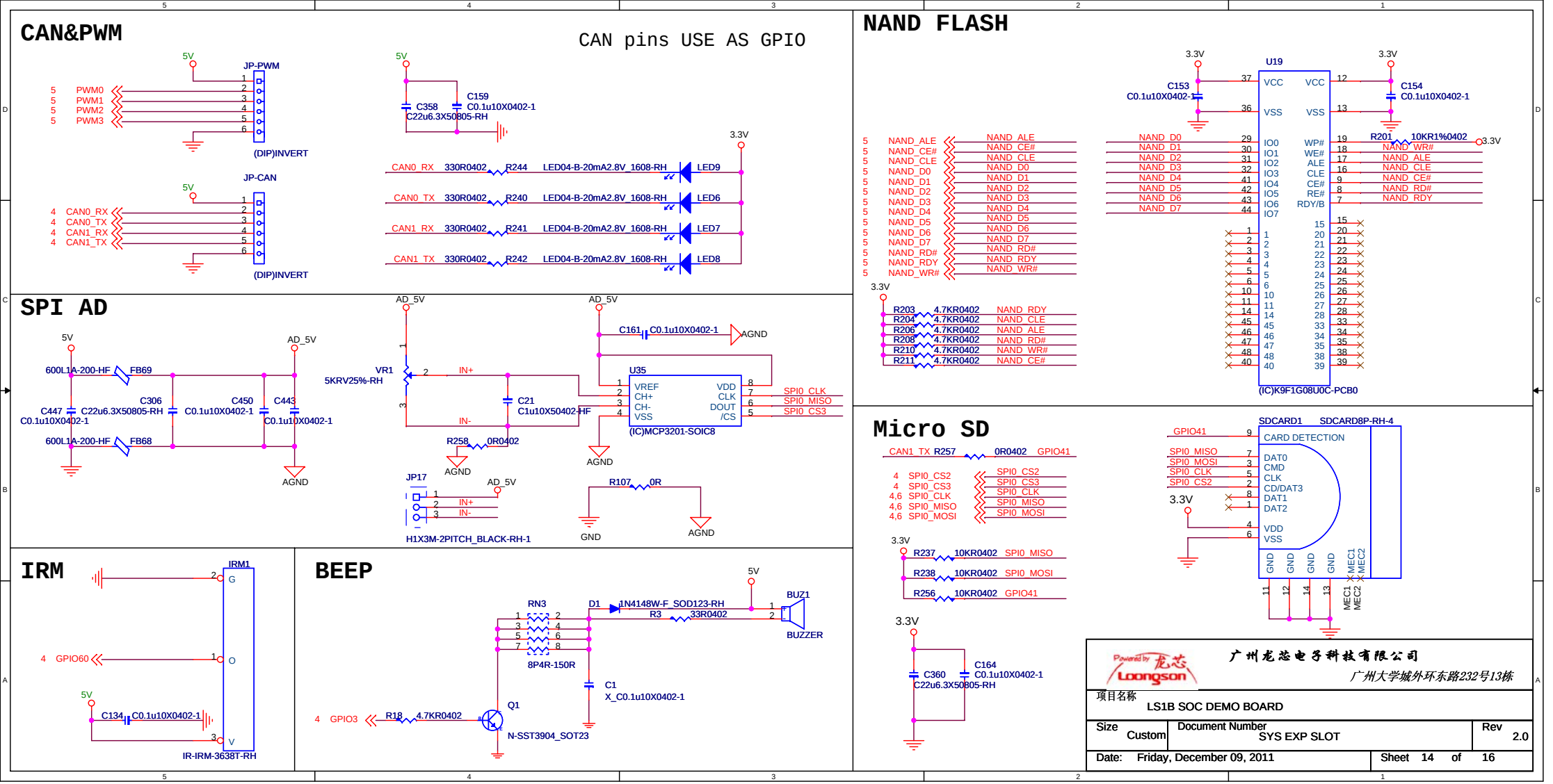
CAN&PWM
CAN pins USE AS GPIO
JP-PWM
PWM0
PWM1
PWM2
PWM3
(DIP)INVERT
JP-CAN
CAN0_RX
CAN0_TX
CAN1_RX
CAN1_TX
(DIP)INVERT
C358 C22u6.3X50805-RH
C159 C0.1u10X0402-1
CAN0_RX 330R0402 R244 LED04-B-20mA2.8V_1608-RH LED9
CAN0_TX 330R0402 R240 LED04-B-20mA2.8V_1608-RH LED6
CAN1_RX 330R0402 R241 LED04-B-20mA2.8V_1608-RH LED7
CAN1_TX 330R0402 R242 LED04-B-20mA2.8V_1608-RH LED8
SPI AD
600L1A-200-HF FB69
600L1A-200-HF FB68
C306 C22u6.3X50805-RH
C447 C0.1u10X0402-1
C450 C0.1u10X0402-1
C443 C0.1u10X0402-1
VR1 5KRV25%-RH
C21 C1u10X50402-HF
R258 0R0402
C161 C0.1u10X0402-1
U35
(IC)MCP3201-SOIC8
SPI0_CLK
SPI0_MISO
SPI0_CS3
JP17
H1X3M-2PITCH_BLACK-RH-1
R107 0R
IRM
IRM1
IR-IRM-3638T-RH
BEEP
RN3 8P4R-150R
D1 1N4148W-F_SOD123-RH
R3 33R0402
BUZ1
BUZZER
C1 X_C0.1u10X0402-1
Q1 N-SST3904_SOT23
R18 4.7KR0402
NAND FLASH
U19
(IC)K9F1G08U0C-PCB0
C153 C0.1u10X0402-1
C154 C0.1u10X0402-1
R201 10KR1%0402
R203 4.7KR0402 NAND_RDY
R204 4.7KR0402 NAND_CLE
R206 4.7KR0402 NAND_ALE
R208 4.7KR0402 NAND_RD#
R210 4.7KR0402 NAND_WR#
R211 4.7KR0402 NAND_CE#
Micro SD
SDCARD1 SDCARD8P-RH-4
CARD DETECTION
R237 10KR0402 SPI0_MISO
R238 10KR0402 SPI0_MOSI
R256 10KR0402 GPIO41
C164 C0.1u10X0402-1
C360 C22u6.3X50805-RH
广州龙芯电子科技有限公司
广州大学城外环东路232号13栋
项目名称
LS1B SOC DEMO BOARD
Size Custom
Document Number SYS EXP SLOT
Rev 2.0
Date: Friday, December 09, 2011
Sheet 14 of 16

5VDC 3A

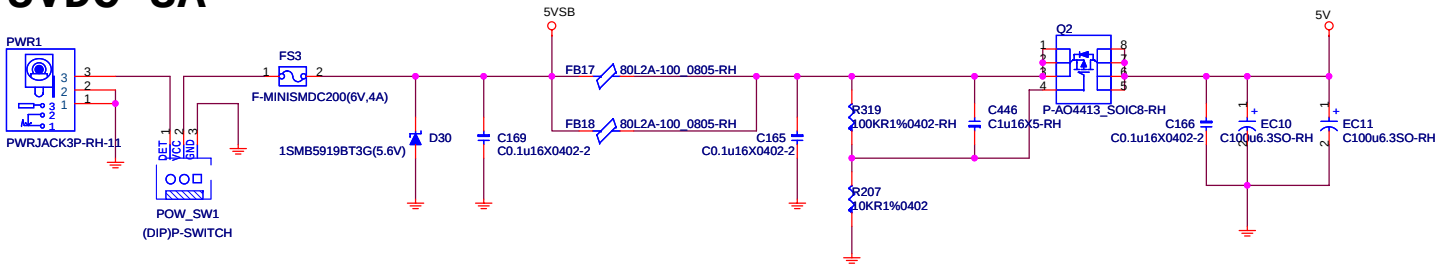

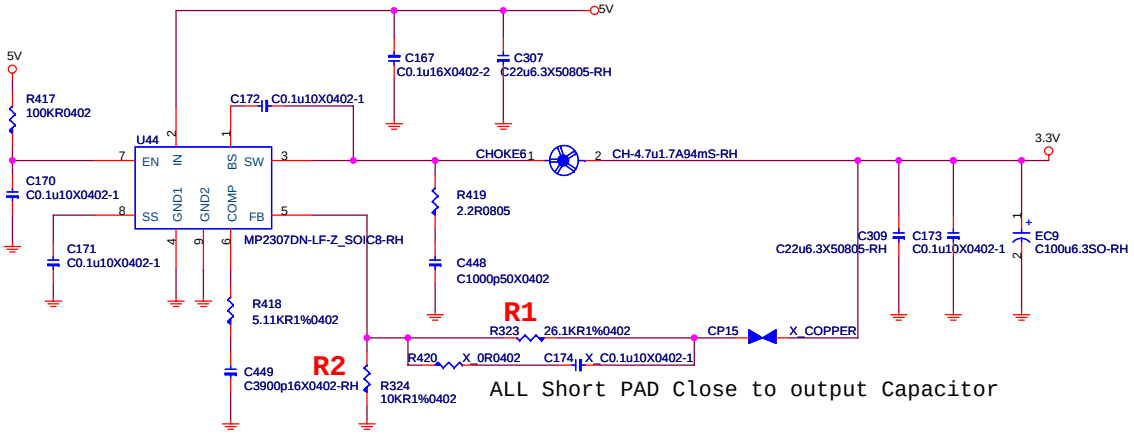

Vout=0.925V*(1+R1/R2)=3.339V

5V电压供电座

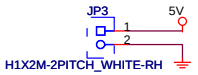

3.3V电压供电座

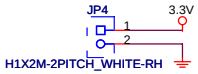

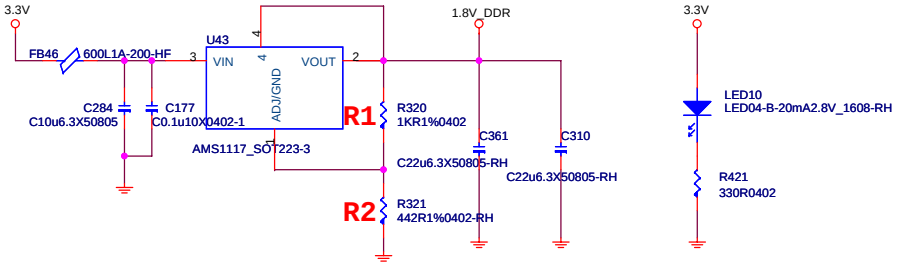

Vout=1.25V*(1+R2/R1)=1.8025V

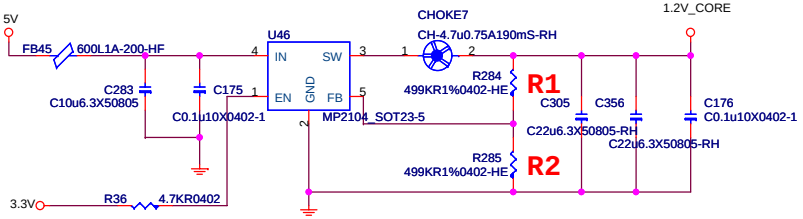

Vout=0.6V*(1+R2/R1)=1.200V

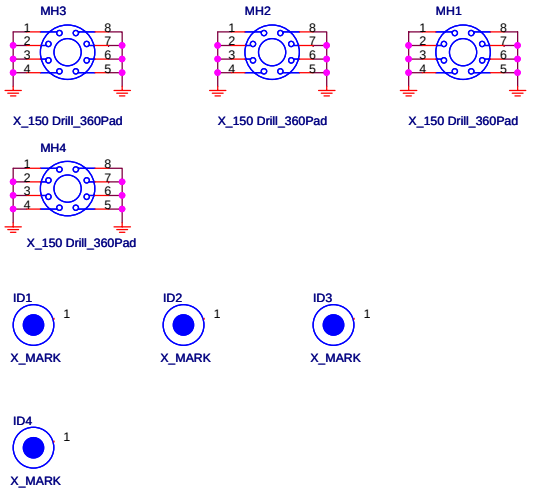

广州龙芯电子科技有限公司

广州大学城外环东路232号13栋

项目名称 LS1B SOC DEMO BOARD		
Size Custom	Document Number POWER	Rev 2.0
Date: Tuesday, December 13, 2011	Sheet 15 of 16	

LS1B 2.0 Change List

1: DDR2 memory from 2 (16bit/128MB) to 1 (16bit/64MB)
2: GMAC0 from RTL8211E to RTL8201EL (100M/MII)
3: GMAC1 from RTL8211E to RTL8201EL (100M/MII)
4: AUDIO from ALC203E to ALC655
5: USB HUB from GL852 to MW7220
6: SPI Flash from SST25VF080B to W25X40BVSSIG(512KB)
7: GPIO0 CAN0_RX GPIO38   子板按键
    GPIO1 CAN0_TX GPIO39   子板按键
    GPIO2 CAN1_TX GPIO41   子板按键
    GPIO3 CAN1_RX GPIO40   BEEP
    GPIO41 CAN1_TX GPIO41   SD CARD侦测
    GPIO60 UART5_TX GPIO61 红外接收
8: 引出的串口 5个 有接电平转换的3个 （UART0, UART2, UART3）
9: Touch Screen通过SPI0实现，片选CS1
10: All Power Solution Changed
11: Changed to support Mirco SD 卡

Powered by 龙芯 Loongson	广州龙芯电子科技有限公司 广州大学城外环东路232号13栋	
项目名称 LS1B SOC DEMO BOARD		
Size A	Document Number REVISION HISTORY	Rev 2.0
Date: Thursday, December 08, 2011	Sheet 16 of 16	