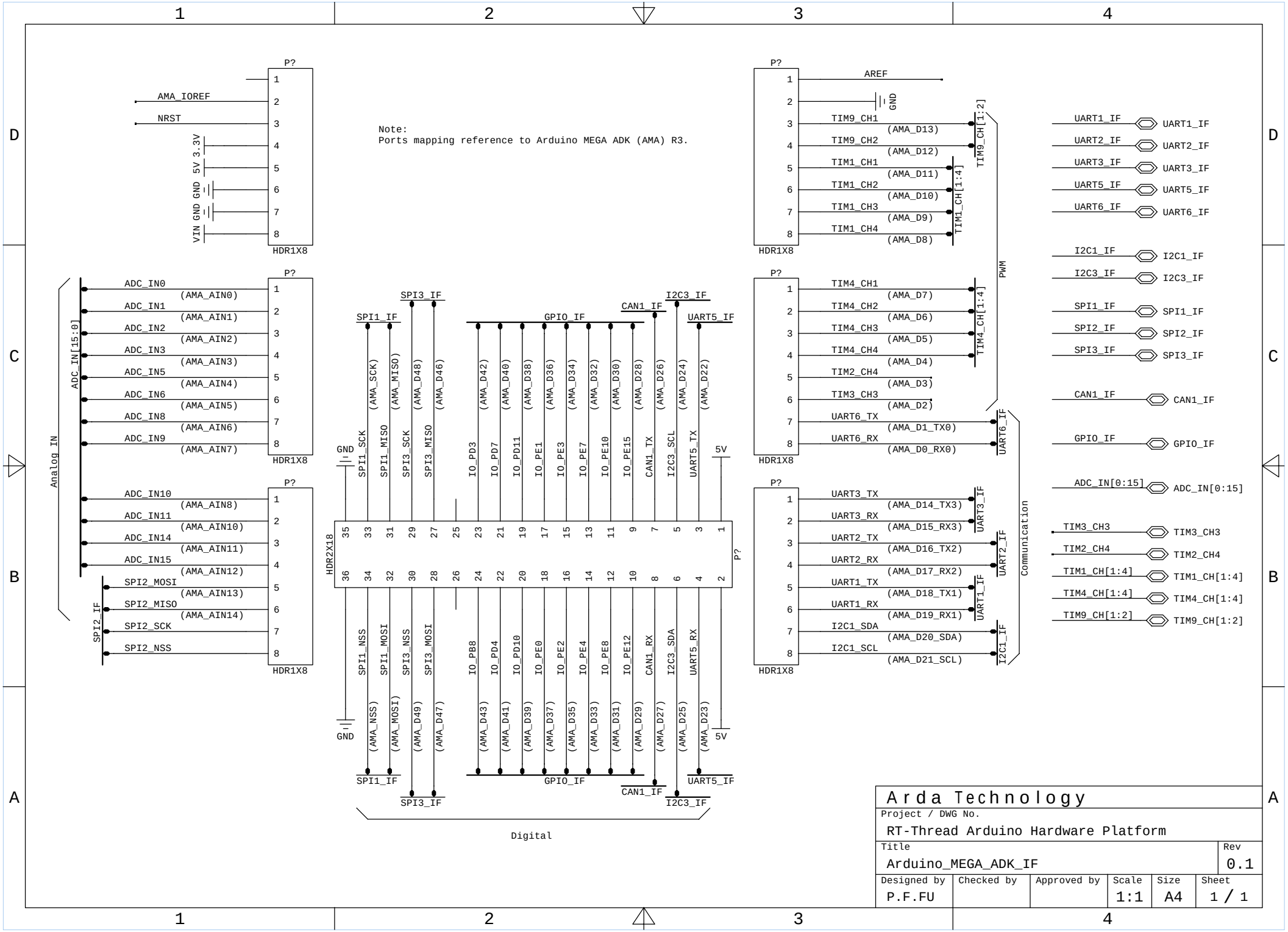
Note:
Ports mapping reference to Arduino MEGA ADK (AMA) R3.
P?
HDR1X8
AMA_IOREF
NRST
5V 3.3V
GND GND
VIN
ADC_IN0 (AMA_AIN0)
ADC_IN1 (AMA_AIN1)
ADC_IN2 (AMA_AIN2)
ADC_IN3 (AMA_AIN3)
ADC_IN5 (AMA_AIN4)
ADC_IN6 (AMA_AIN5)
ADC_IN8 (AMA_AIN6)
ADC_IN9 (AMA_AIN7)
ADC_IN10 (AMA_AIN8)
ADC_IN11 (AMA_AIN10)
ADC_IN14 (AMA_AIN11)
ADC_IN15 (AMA_AIN12)
SPI2_MOSI (AMA_AIN13)
SPI2_MISO (AMA_AIN14)
SPI2_SCK
SPI2_NSS
ADC_IN[15:0]
Analog IN
SPI2_IF
HDR2X18
SPI1_IF
SPI3_IF
GPIO_IF
CAN1_IF
I2C3_IF
UART5_IF
GND
5V
SPI1_SCK (AMA_SCK)
SPI1_MISO (AMA_MISO)
SPI3_SCK (AMA_D48)
SPI3_MISO (AMA_D46)
IO_PD3 (AMA_D42)
IO_PD7 (AMA_D40)
IO_PD11 (AMA_D38)
IO_PE1 (AMA_D36)
IO_PE3 (AMA_D34)
IO_PE7 (AMA_D32)
IO_PE10 (AMA_D30)
IO_PE15 (AMA_D28)
CAN1_TX (AMA_D26)
I2C3_SCL (AMA_D24)
UART5_TX (AMA_D22)
SPI1_NSS (AMA_NSS)
SPI1_MOSI (AMA_MOSI)
SPI3_NSS (AMA_D49)
SPI3_MOSI (AMA_D47)
IO_PB8 (AMA_D43)
IO_PD4 (AMA_D41)
IO_PD10 (AMA_D39)
IO_PE0 (AMA_D37)
IO_PE2 (AMA_D35)
IO_PE4 (AMA_D33)
IO_PE8 (AMA_D31)
IO_PE12 (AMA_D29)
CAN1_RX (AMA_D27)
I2C3_SDA (AMA_D25)
UART5_RX (AMA_D23)
Digital
AREF
TIM9_CH1 (AMA_D13)
TIM9_CH2 (AMA_D12)
TIM1_CH1 (AMA_D11)
TIM1_CH2 (AMA_D10)
TIM1_CH3 (AMA_D9)
TIM1_CH4 (AMA_D8)
TIM9_CH[1:2]
TIM1_CH[1:4]
TIM4_CH1 (AMA_D7)
TIM4_CH2 (AMA_D6)
TIM4_CH3 (AMA_D5)
TIM4_CH4 (AMA_D4)
TIM2_CH4 (AMA_D3)
TIM3_CH3 (AMA_D2)
TIM4_CH[1:4]
PWM
UART6_TX (AMA_D1_TX0)
UART6_RX (AMA_D0_RX0)
UART6_IF
UART3_TX (AMA_D14_TX3)
UART3_RX (AMA_D15_RX3)
UART3_IF
UART2_TX (AMA_D16_TX2)
UART2_RX (AMA_D17_RX2)
UART2_IF
UART1_TX (AMA_D18_TX1)
UART1_RX (AMA_D19_RX1)
UART1_IF
I2C1_SDA (AMA_D20_SDA)
I2C1_SCL (AMA_D21_SCL)
I2C1_IF
Communication
UART1_IF
UART2_IF
UART3_IF
UART5_IF
UART6_IF
I2C1_IF
I2C3_IF
SPI1_IF
SPI2_IF
SPI3_IF
CAN1_IF
GPIO_IF
ADC_IN[0:15]
TIM3_CH3
TIM2_CH4
TIM1_CH[1:4]
TIM4_CH[1:4]
TIM9_CH[1:2]
Arda Technology
Project / DWG No.
RT-Thread Arduino Hardware Platform
Title
Arduino_MEGA_ADK_IF
Rev
0.1
Designed by
P.F.FU
Checked by
Approved by
Scale
1:1
Size
A4
Sheet
1 / 1

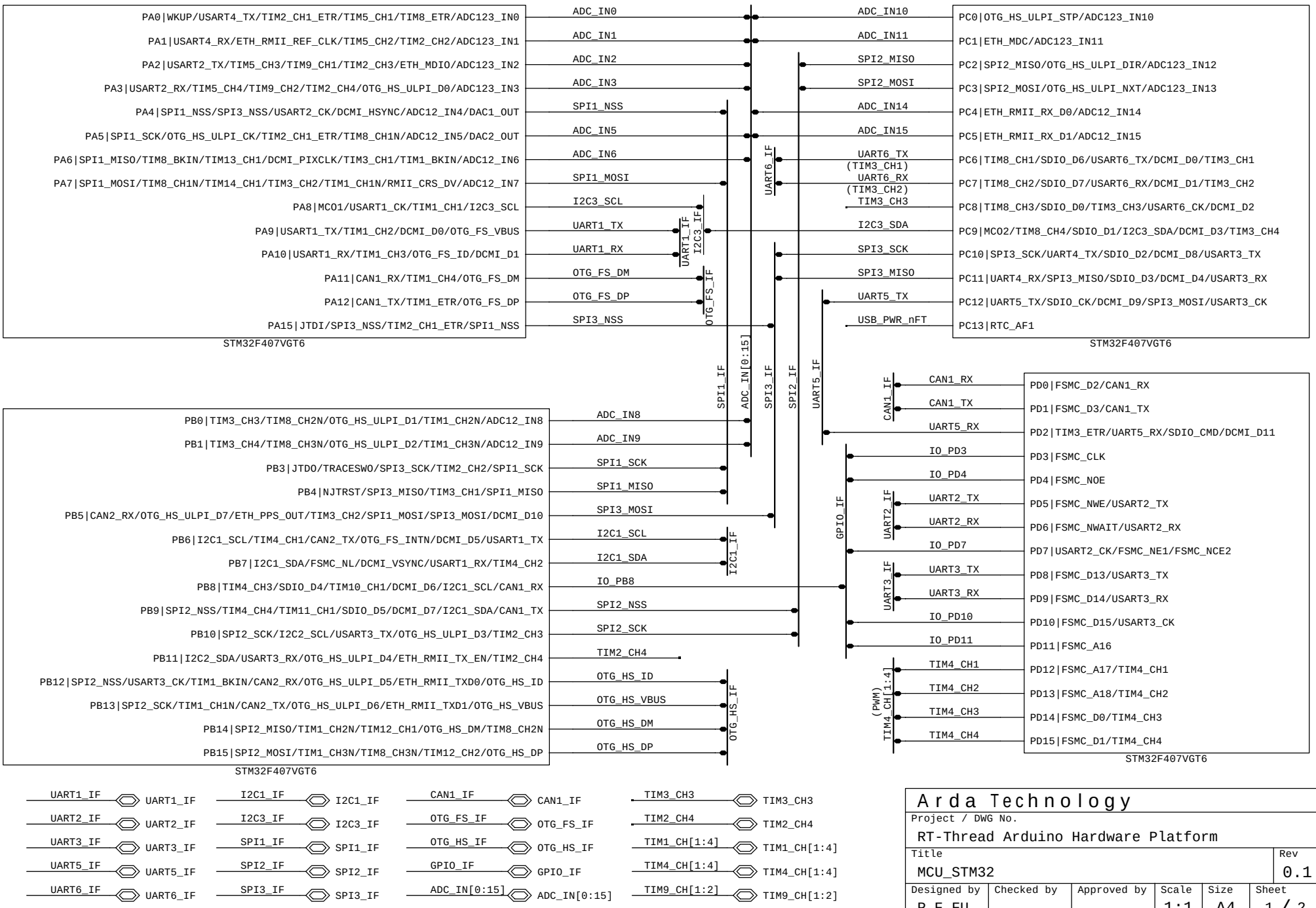
PA0|WKUP/USART4_TX/TIM2_CH1_ETR/TIM5_CH1/TIM8_ETR/ADC123_IN0
PA1|USART4_RX/ETH_RMII_REF_CLK/TIM5_CH2/TIM2_CH2/ADC123_IN1
PA2|USART2_TX/TIM5_CH3/TIM9_CH1/TIM2_CH3/ETH_MDIO/ADC123_IN2
PA3|USART2_RX/TIM5_CH4/TIM9_CH2/TIM2_CH4/OTG_HS_ULPI_D0/ADC123_IN3
PA4|SPI1_NSS/SPI3_NSS/USART2_CK/DCMI_HSYNC/ADC12_IN4/DAC1_OUT
PA5|SPI1_SCK/OTG_HS_ULPI_CK/TIM2_CH1_ETR/TIM8_CH1N/ADC12_IN5/DAC2_OUT
PA6|SPI1_MISO/TIM8_BKIN/TIM13_CH1/DCMI_PIXCLK/TIM3_CH1/TIM1_BKIN/ADC12_IN6
PA7|SPI1_MOSI/TIM8_CH1N/TIM14_CH1/TIM3_CH2/TIM1_CH1N/RMII_CRS_DV/ADC12_IN7
PA8|MCO1/USART1_CK/TIM1_CH1/I2C3_SCL
PA9|USART1_TX/TIM1_CH2/DCMI_D0/OTG_FS_VBUS
PA10|USART1_RX/TIM1_CH3/OTG_FS_ID/DCMI_D1
PA11|CAN1_RX/TIM1_CH4/OTG_FS_DM
PA12|CAN1_TX/TIM1_ETR/OTG_FS_DP
PA15|JTDI/SPI3_NSS/TIM2_CH1_ETR/SPI1_NSS
STM32F407VGT6
ADC_IN0
ADC_IN1
ADC_IN2
ADC_IN3
SPI1_NSS
ADC_IN5
ADC_IN6
SPI1_MOSI
I2C3_SCL
UART1_TX
UART1_RX
OTG_FS_DM
OTG_FS_DP
SPI3_NSS
UART1_IF
I2C3_IF
OTG_FS_IF
ADC_IN10
ADC_IN11
SPI2_MISO
SPI2_MOSI
ADC_IN14
ADC_IN15
UART6_TX
(TIM3_CH1)
UART6_RX
(TIM3_CH2)
TIM3_CH3
I2C3_SDA
SPI3_SCK
SPI3_MISO
UART5_TX
USB_PWR_nFT
UART6_IF
PC0|OTG_HS_ULPI_STP/ADC123_IN10
PC1|ETH_MDC/ADC123_IN11
PC2|SPI2_MISO/OTG_HS_ULPI_DIR/ADC123_IN12
PC3|SPI2_MOSI/OTG_HS_ULPI_NXT/ADC123_IN13
PC4|ETH_RMII_RX_D0/ADC12_IN14
PC5|ETH_RMII_RX_D1/ADC12_IN15
PC6|TIM8_CH1/SDIO_D6/USART6_TX/DCMI_D0/TIM3_CH1
PC7|TIM8_CH2/SDIO_D7/USART6_RX/DCMI_D1/TIM3_CH2
PC8|TIM8_CH3/SDIO_D0/TIM3_CH3/USART6_CK/DCMI_D2
PC9|MCO2/TIM8_CH4/SDIO_D1/I2C3_SDA/DCMI_D3/TIM3_CH4
PC10|SPI3_SCK/UART4_TX/SDIO_D2/DCMI_D8/USART3_TX
PC11|UART4_RX/SPI3_MISO/SDIO_D3/DCMI_D4/USART3_RX
PC12|UART5_TX/SDIO_CK/DCMI_D9/SPI3_MOSI/USART3_CK
PC13|RTC_AF1
STM32F407VGT6
SPI1_IF
ADC_IN[0:15]
SPI3_IF
SPI2_IF
UART5_IF
PB0|TIM3_CH3/TIM8_CH2N/OTG_HS_ULPI_D1/TIM1_CH2N/ADC12_IN8
PB1|TIM3_CH4/TIM8_CH3N/OTG_HS_ULPI_D2/TIM1_CH3N/ADC12_IN9
PB3|JTDO/TRACESWO/SPI3_SCK/TIM2_CH2/SPI1_SCK
PB4|NJTRST/SPI3_MISO/TIM3_CH1/SPI1_MISO
PB5|CAN2_RX/OTG_HS_ULPI_D7/ETH_PPS_OUT/TIM3_CH2/SPI1_MOSI/SPI3_MOSI/DCMI_D10
PB6|I2C1_SCL/TIM4_CH1/CAN2_TX/OTG_FS_INTN/DCMI_D5/USART1_TX
PB7|I2C1_SDA/FSMC_NL/DCMI_VSYNC/USART1_RX/TIM4_CH2
PB8|TIM4_CH3/SDIO_D4/TIM10_CH1/DCMI_D6/I2C1_SCL/CAN1_RX
PB9|SPI2_NSS/TIM4_CH4/TIM11_CH1/SDIO_D5/DCMI_D7/I2C1_SDA/CAN1_TX
PB10|SPI2_SCK/I2C2_SCL/USART3_TX/OTG_HS_ULPI_D3/TIM2_CH3
PB11|I2C2_SDA/USART3_RX/OTG_HS_ULPI_D4/ETH_RMII_TX_EN/TIM2_CH4
PB12|SPI2_NSS/USART3_CK/TIM1_BKIN/CAN2_RX/OTG_HS_ULPI_D5/ETH_RMII_TXD0/OTG_HS_ID
PB13|SPI2_SCK/TIM1_CH1N/CAN2_TX/OTG_HS_ULPI_D6/ETH_RMII_TXD1/OTG_HS_VBUS
PB14|SPI2_MISO/TIM1_CH2N/TIM12_CH1/OTG_HS_DM/TIM8_CH2N
PB15|SPI2_MOSI/TIM1_CH3N/TIM8_CH3N/TIM12_CH2/OTG_HS_DP
STM32F407VGT6
ADC_IN8
ADC_IN9
SPI1_SCK
SPI1_MISO
SPI3_MOSI
I2C1_SCL
I2C1_SDA
IO_PB8
SPI2_NSS
SPI2_SCK
TIM2_CH4
OTG_HS_ID
OTG_HS_VBUS
OTG_HS_DM
OTG_HS_DP
I2C1_IF
OTG_HS_IF
CAN1_IF
CAN1_RX
CAN1_TX
UART5_RX
IO_PD3
IO_PD4
UART2_TX
UART2_RX
IO_PD7
UART3_TX
UART3_RX
IO_PD10
IO_PD11
TIM4_CH1
TIM4_CH2
TIM4_CH3
TIM4_CH4
GPIO_IF
UART2_IF
UART3_IF
(PWM)
TIM4_CH[1:4]
PD0|FSMC_D2/CAN1_RX
PD1|FSMC_D3/CAN1_TX
PD2|TIM3_ETR/UART5_RX/SDIO_CMD/DCMI_D11
PD3|FSMC_CLK
PD4|FSMC_NOE
PD5|FSMC_NWE/USART2_TX
PD6|FSMC_NWAIT/USART2_RX
PD7|USART2_CK/FSMC_NE1/FSMC_NCE2
PD8|FSMC_D13/USART3_TX
PD9|FSMC_D14/USART3_RX
PD10|FSMC_D15/USART3_CK
PD11|FSMC_A16
PD12|FSMC_A17/TIM4_CH1
PD13|FSMC_A18/TIM4_CH2
PD14|FSMC_D0/TIM4_CH3
PD15|FSMC_D1/TIM4_CH4
STM32F407VGT6
UART1_IF
UART2_IF
UART3_IF
UART5_IF
UART6_IF
I2C1_IF
I2C3_IF
SPI1_IF
SPI2_IF
SPI3_IF
CAN1_IF
OTG_FS_IF
OTG_HS_IF
GPIO_IF
ADC_IN[0:15]
TIM3_CH3
TIM2_CH4
TIM1_CH[1:4]
TIM4_CH[1:4]
TIM9_CH[1:2]
Arda Technology
Project / DWG No.
RT-Thread Arduino Hardware Platform
Title
MCU_STM32
Rev
0.1
Designed by
P.F.FU
Checked by
Approved by
Scale
1:1
Size
A4
Sheet
1 / 2

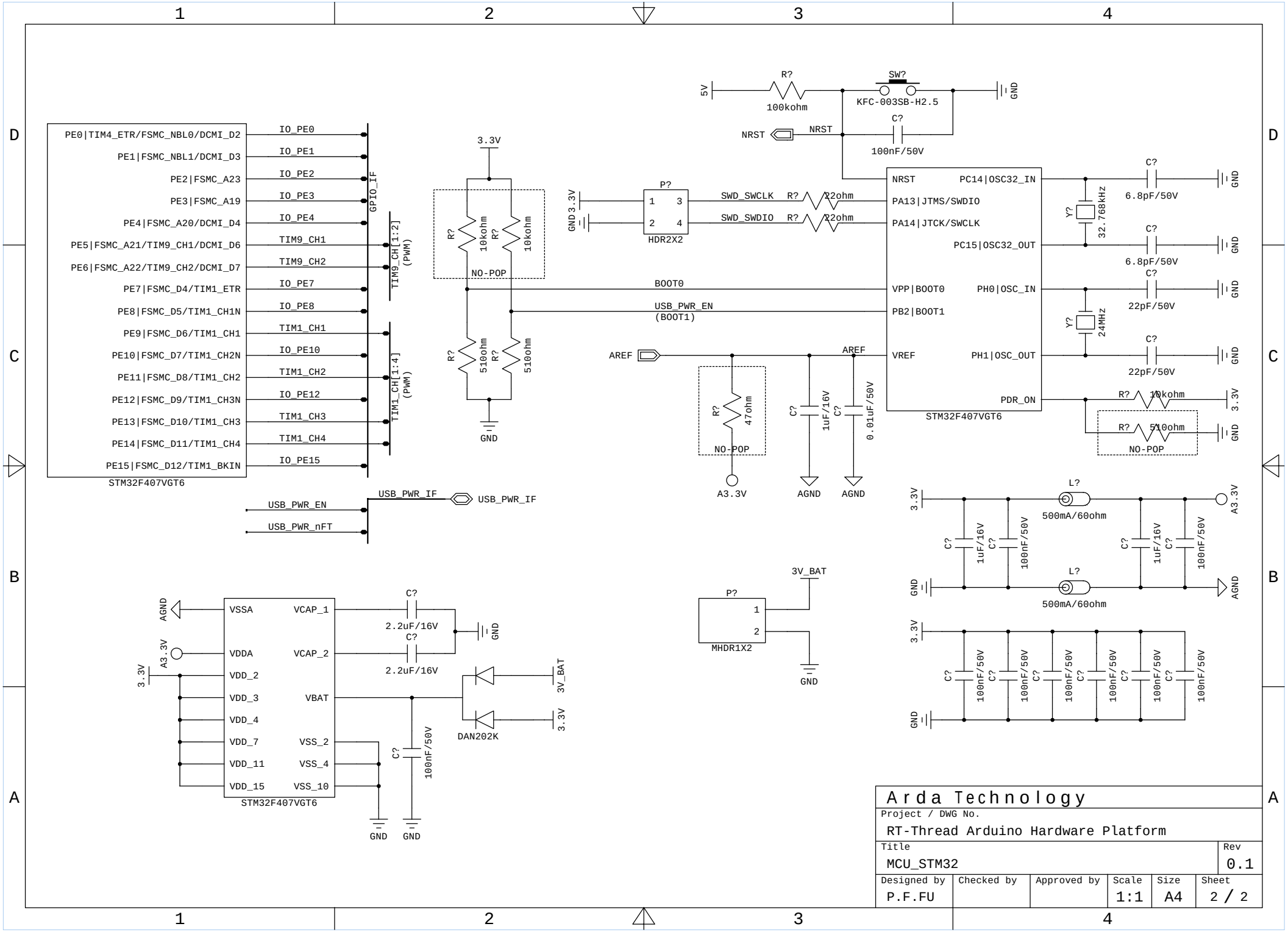

Arda Technology					
Project / DWG No.					
RT-Thread Arduino Hardware Platform					
Title					Rev
MCU_STM32					0.1
Designed by	Checked by	Approved by	Scale	Size	Sheet
P.F.FU			1:1	A4	2 / 2