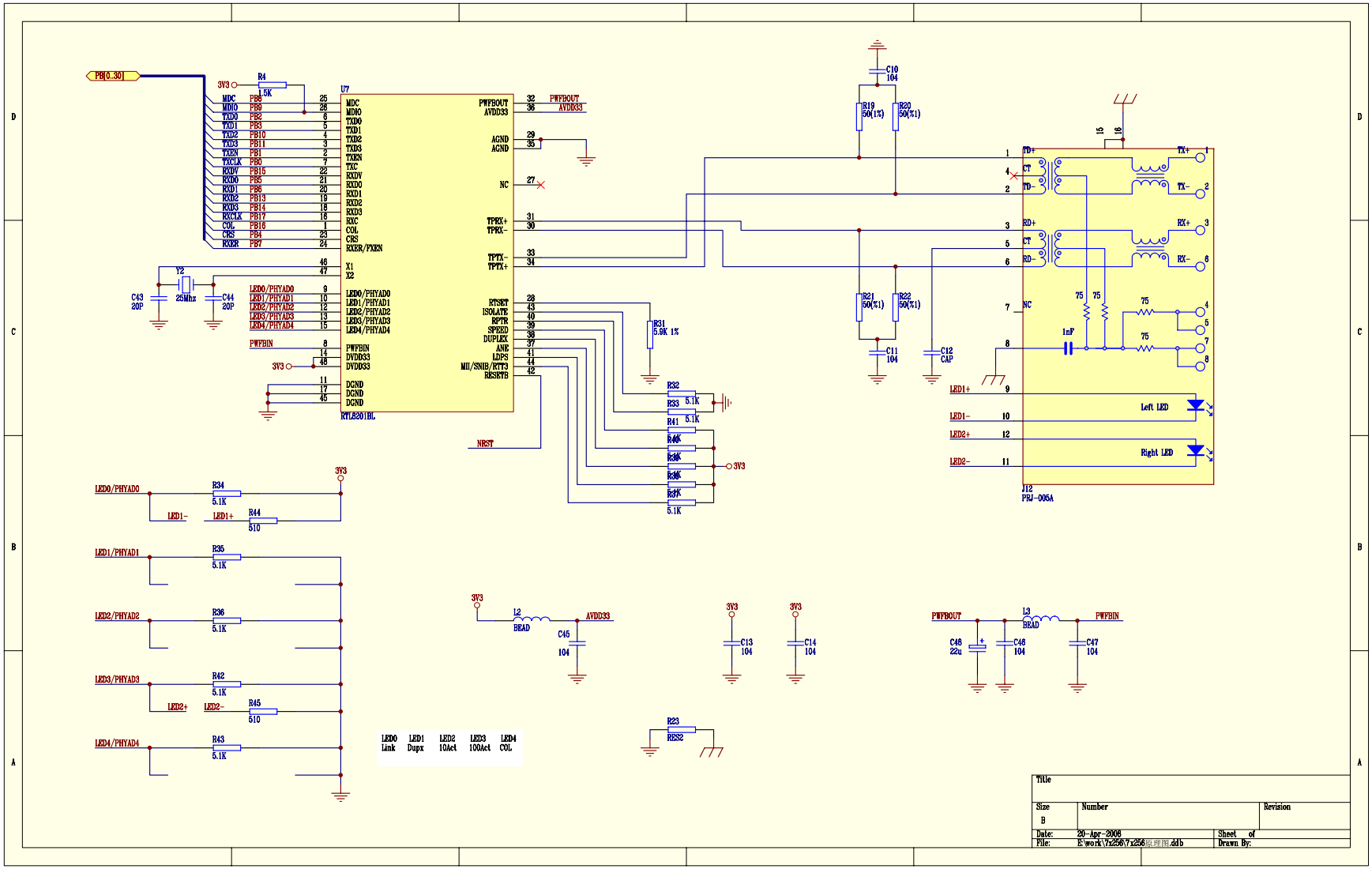
PB[0..30]
U7
RTL8201BL
J12
PRJ-005A
Left LED
Right LED
LED0 LED1 LED2 LED3 LED4
Link Dupx 10Act 100Act COL
Title
Size B
Number
Revision
Date: 20-Apr-2006
Sheet of
File: E:\work\Yx256\Yx256原理图.ddb
Drawn By: