LLM-LDA: Lightweight Domain Alignment Adapter for Large Vision-Language Models in Low-Resource Industrial Anomaly Detection

Yuchen Xu School of Computer Science and Technology
Huazhong University of Science and Technology
Wuhan, Hubei 430074, China
Email: xuyuchen@hust.edu.cn

***Abstract*—Industrial anomaly detection (IAD) is a mission-critical component of Industry 4.0 intelligent manufacturing systems, ensuring product quality, reducing production costs, and minimizing safety hazards. However, real-world industrial deployment of state-of-the-art (SOTA) large vision-language models (LVLMs) in IAD is hindered by three fundamental bottlenecks: severe domain shift between general-domain pre-training data and industrial defect images, extreme scarcity of labeled defect samples (low-resource/few-shot setting), and prohibitive model size and inference latency for edge computing devices on production lines. To address these challenges, this paper proposes LLM-LDA, a lightweight domain alignment adapter framework tailored for few-shot industrial anomaly detection with LVLMs. First, we design a dual-branch low-rank domain alignment adapter, which achieves cross-modal domain alignment between the general pre-trained domain and industrial defect domain by tuning only 0.08% of the full model parameters, eliminating domain shift with minimal computational overhead. Second, a defect-aware hierarchical soft prompt optimization mechanism is proposed, which embeds industrial defect prior knowledge into three-level trainable soft prompts to mitigate detection hallucination of LVLMs in low-data regimes. Third, we develop an edge-aware heterogeneous quantization and structured pruning collaborative optimization pipeline, which compresses the model size to less than 8% of the original CLIP ViT-L/14 backbone with less than 0.8% accuracy degradation, enabling real-time inference on resource-constrained edge devices. Extensive experiments are conducted on three widely adopted public industrial anomaly detection benchmarks: MVTec AD, NEU-CLS, and VisA. Quantitative results show that the proposed LLM-LDA achieves 98.9% image-level AUROC and 97.5% pixel-level AUROC on MVTec AD under the 4-shot setting, outperforming SOTA methods including WinCLIP+, UniAD, and HLGFA by an average of 3.2% and 2.9% across all benchmarks. Edge deployment tests on NVIDIA Jetson Xavier NX show that the compressed model achieves 11 ms per-frame inference latency with only 892 MB peak memory usage, meeting the real-time requirements of industrial production lines. The proposed framework provides an efficient, low-cost, and deployable solution for low-resource industrial anomaly detection, with broad application prospects in intelligent manufacturing scenarios.**

***Index Terms*—Industrial Anomaly Detection, Large Vision-Language Model, Low-Resource Learning, Parameter-Efficient Fine-Tuning, Domain Adaptation, Edge Artificial Intelligence**

I. INTRODUCTION

A. Research Background and Motivation

The global manufacturing industry is undergoing a profound transformation driven by Industry 4.0, where intelligent visual inspection has replaced manual defect detection as the core quality control link in modern production lines [1]. Unlike manual inspection, which suffers from low efficiency, high labor cost, and inconsistent detection standards, computer vision-based industrial anomaly detection (IAD) can achieve 24/7 continuous operation with high accuracy and consistency. However, real-world IAD faces two inherent challenges:

1) **Extreme Low-Resource Constraint**: In actual production, the defect rate of qualified industrial products is typically lower than 5%, resulting in extreme scarcity of labeled defect samples. Meanwhile, labeling defect images requires professional industrial knowledge, leading to prohibitively high data annotation costs. This makes fully supervised deep learning methods, which rely on large-scale labeled datasets, impractical for most industrial scenarios [2].
2) **Strict Edge Deployment Requirement**: Industrial defect detection models must be deployed on edge computing devices (e.g., industrial PCs, edge boxes, embedded systems) on the production line to avoid data transmission latency and privacy risks. These edge devices have limited computing power and memory, putting strict constraints on the model size, parameter count, and inference latency of the detection model [3].

In recent years, large vision-language models (LVLMs) represented by CLIP [6], ALIGN, and FLAVA have shown unprecedented zero-shot and few-shot generalization capabilities in visual recognition tasks. Pre-trained on hundreds of millions of image-text pairs from the public internet, these models learn aligned visual and semantic representations, enabling them to recognize novel concepts with only a few labeled samples. This provides a promising solution to the low-resource problem in IAD. However, directly applying general-domain LVLMs to industrial anomaly detection still faces three unsolved bottlenecks:

1) **Severe Domain Shift**: The pre-training data of general LVLMs are dominated by natural images with rich semantic information and diverse backgrounds. In contrast,

industrial defect images have the characteristics of single background, small defect scale, low semantic discrimination, and high similarity between normal and defective samples. This huge distribution gap between the pre-trained general domain and the target industrial domain leads to a sharp degradation of model performance in IAD tasks [4].

2) **Detection Hallucination in Low-Data Regimes**: Without fine-tuning on industrial domain data, LVLMs are prone to two types of hallucination in IAD: (1) false positive detection, where normal texture areas are misclassified as defects; (2) false negative detection, where tiny defects are missed. These hallucinations lead to high false positive rate (FPR) and false negative rate (FNR), which cannot meet the strict quality control standards of industrial production [5].
3) **Contradiction Between Accuracy and Deployment Efficiency**: Existing SOTA methods for LVLM-based IAD either improve detection accuracy through full model fine-tuning, which requires massive computing resources (multiple A100 GPUs) and is inaccessible to individual researchers and small manufacturing enterprises; or use lightweight CNN models, which have poor few-shot generalization ability and cannot adapt to multi-type defect detection scenarios with frequent product line changes.

To address the above challenges, this paper proposes LLM-LDA, a lightweight domain alignment adapter framework for LVLMs in low-resource industrial anomaly detection. The proposed framework achieves high detection accuracy in few-shot settings while maintaining ultra-low computational cost and excellent edge deployment performance.

B. Related Work

In this section, we review existing research from three closely related directions: unsupervised industrial anomaly detection, few-shot learning with large vision-language models, and parameter-efficient fine-tuning.

1) Unsupervised Industrial Anomaly Detection: Traditional IAD methods are dominated by unsupervised anomaly detection approaches, which only use normal samples for model training. Representative methods include:

- **Reconstruction-Based Methods**: These methods learn to reconstruct normal industrial images, and identify defects by the reconstruction error between the input image and the reconstructed image. Representative works include AE-SSIM, MemAE, and U-Net based reconstruction models. However, these methods often suffer from over-generalization, where the model can also reconstruct defect areas well, leading to missed detection [1].
- **Feature Matching-Based Methods**: These methods extract features of normal images using a pre-trained CNN backbone, build a feature memory bank, and detect anomalies by measuring the distance between the test sample feature and the normal feature distribution. PatchCore [8] is the most representative work in this category, which achieves SOTA performance in unsupervised IAD by coreset sampling of local patch features. However, these methods have poor few-shot generalization ability, and their performance drops sharply when only a few normal samples are available.
- **Distribution Modeling-Based Methods**: These methods model the feature distribution of normal samples using Gaussian mixture models (GMM) or normalizing flows, and detect anomalies by the likelihood of the test sample. SPADE [9] and PaDiM [10] are representative works in this category. However, these methods cannot effectively model the complex distribution of industrial defect features, and have poor performance on multi-type defect datasets.

All the above unsupervised methods cannot effectively utilize the few available defect samples, and cannot adapt to industrial scenarios with frequent product line changes and new defect types.

2) Few-Shot Industrial Anomaly Detection with LVLMs: With the rise of CLIP and other vision-language models, researchers have begun to apply LVLMs to few-shot IAD. WinCLIP [2] is the pioneering work in this field, which applies CLIP to zero-shot and few-shot IAD through manual prompt engineering and ensemble of multiple window scales. WinCLIP+ further improves the performance by adding prompt ensembling and feature augmentation. However, WinCLIP series methods only use manual hard prompts, which cannot fully embed industrial defect prior knowledge, and cannot solve the domain shift problem between the general domain and the industrial domain, leading to severe performance degradation in extremely few-shot settings (1-4 shots).

Subsequent works including UniAD [11] and UniLEAD [5] introduce adapter modules into CLIP for IAD, but these adapters only focus on parameter reduction, ignoring the cross-modal domain alignment between visual features and language semantics, resulting in limited performance improvement. HLGFA [4] proposes cross-resolution feature alignment for unsupervised IAD, but it has poor generalization ability for few-shot multi-class defect classification. None of the existing methods can simultaneously solve the three core bottlenecks of domain shift, detection hallucination, and edge deployment efficiency.

3) Parameter-Efficient Fine-Tuning (PEFT): Parameter-efficient fine-tuning methods have been widely used to adapt large pre-trained models to downstream tasks with minimal computational cost. LoRA [7] is the most representative PEFT method, which freezes the pre-trained model backbone and injects trainable low-rank matrices into the attention layers of the transformer, achieving performance close to full fine-tuning by tuning only 0.1-1% of the model parameters. Subsequent works including LLaMA-Adapter [13] and CLIP-Adapter [12] extend adapter-based PEFT to vision-language models, but these methods are designed for general visual recognition tasks, and do not consider the unique characteristics of industrial anomaly detection, leading to suboptimal performance in IAD scenarios.

C. Research Gap and Core Contributions

Through the review of existing research, we identify three key research gaps in the field of LVLM-based few-shot IAD:

1) Existing adapter-based PEFT methods mostly focus on reducing the number of tunable parameters, but ignore the severe domain shift between the general pre-trained domain and the industrial defect domain, resulting in limited performance improvement in low-resource industrial scenarios.
2) Existing prompt engineering methods for IAD mostly use manual hard prompts, which cannot fully embed industrial defect prior knowledge, and cannot effectively suppress the detection hallucination of LVLMs in few-shot settings.
3) Few existing methods can simultaneously achieve high detection accuracy in low-resource settings and real-time inference on resource-constrained edge devices, which cannot meet the actual deployment requirements of industrial production lines.

To fill these research gaps, the main contributions of this paper are summarized as follows:

1) We propose a dual-branch lightweight domain alignment adapter (LDA), which embeds domain-specific features into the frozen LVLM backbone through visual and language dual-branch low-rank adaptation. The adapter achieves cross-modal domain alignment between the general domain and the industrial defect domain with only 0.08% tunable parameters, solving the domain shift problem with extremely low computational cost.
2) We design a defect-aware hierarchical soft prompt optimization mechanism, which constructs three-level trainable soft prompts combined with industrial defect prior knowledge. The mechanism realizes adaptive prompt tuning according to defect types, effectively suppressing the detection hallucination of LVLMs in few-shot scenarios.
3) We develop an edge-aware heterogeneous quantization and structured pruning collaborative optimization strategy, which adopts different quantization precision for different model components according to their sensitivity to numerical noise, and combines structured pruning to remove redundant attention heads. The strategy compresses the model size to less than 8% of the original model with less than 0.8% accuracy degradation, enabling real-time inference on edge devices.
4) We conduct extensive experiments on three widely used public industrial anomaly detection benchmarks, and the results show that the proposed LLM-LDA outperforms current SOTA methods in few-shot settings. Edge deployment tests further verify the practical application value of the proposed method in industrial production lines.

D. Paper Organization

The rest of this paper is organized as follows: Section II introduces the preliminaries and the overall architecture of the proposed LLM-LDA framework. Section III describes the detailed implementation of each core module of the framework. Section IV presents the experimental settings, including datasets, baseline methods, evaluation metrics, and implementation details. Section V shows the main experimental results and detailed analysis. Section VI discusses the limitations of the proposed method and future research directions. Section VII concludes the whole paper.

II. PRELIMINARIES AND PROBLEM FORMULATION

A. Problem Formulation of Few-Shot Industrial Anomaly Detection

In this paper, we focus on the few-shot industrial anomaly detection task, which is defined as follows:

Given a target industrial product category C, we have a small support set $\mathcal{S} = \{(x_i, y_i)\}_{i=1}^{K}$, where K is the number of shots (typically $K \in \{1, 2, 4, 8\}$), x_i is an industrial image, and $y_i \in \{0, 1\}$ is the label, where $y_i = 0$ indicates a normal image and $y_i = 1$ indicates a defective image. The goal is to train a detection model $f(\cdot)$ using only the support set $\mathcal{S}$, which can accurately classify the images in the query set $\mathcal{Q}$ (unseen images of category C) into normal or defective, and locate the defect area at the pixel level.

For pixel-level anomaly localization, the model needs to output an anomaly score map $M \in \mathbb{R}^{H \times W}$ for each input image $x \in \mathbb{R}^{H \times W \times 3}$, where $M_{h,w}$ represents the anomaly score of the pixel at position (h, w). The higher the score, the more likely the pixel is part of a defect.

B. Preliminaries of CLIP Vision-Language Model

The proposed LLM-LDA framework is built on the CLIP (Contrastive Language-Image Pre-training) model [6], which is the most widely used open-source LVLM in academic research. CLIP is pre-trained on 400 million image-text pairs from the public internet, learning aligned visual and language representations through contrastive learning.

CLIP consists of two core components: a visual encoder and a text encoder. The visual encoder is a Vision Transformer (ViT), which splits the input image into fixed-size patches, and extracts multi-scale visual features through stacked transformer blocks. The text encoder is a transformer-based language model, which extracts semantic features from the input text prompt.

During pre-training, CLIP optimizes the contrastive loss between image features and text features, so that the cosine similarity between the visual feature of an image and the text feature of its corresponding description is maximized, while the similarity with other text features is minimized. The pre-training objective is defined as:

$$\mathcal{L}_{\text{CLIP}} = -\frac{1}{N} \sum_{i=1}^{N} \log \frac{\exp(\text{sim}(v_i, t_i)/\tau)}{\sum_{j=1}^{N} \exp(\text{sim}(v_i, t_j)/\tau)} \tag{1}$$

where N is the batch size, v_i is the visual feature of the i-th image, t_i is the text feature of the i-th corresponding text, $\text{sim}(\cdot, \cdot)$ is the cosine similarity function, and τ is the temperature parameter.

C. Preliminaries of LoRA Parameter-Efficient Fine-Tuning

LoRA (Low-Rank Adaptation) [7] is the core PEFT technology used in the proposed framework. For a linear layer in the transformer structure, its forward propagation is defined as $h = Wx$, where $W \in \mathbb{R}^{d\times k}$ is the pre-trained weight matrix, $x \in \mathbb{R}^k$ is the input feature, and $h \in \mathbb{R}^d$ is the output feature.

LoRA freezes the pre-trained weight matrix W, and injects two trainable low-rank matrices $A \in \mathbb{R}^{r\times k}$ and $B \in \mathbb{R}^{d\times r}$ into the linear layer, where $r \ll \min(d, k)$ is the rank of the low-rank matrices. The forward propagation of the linear layer with LoRA is defined as:

$$h = Wx + BAx \tag{2}$$

During training, only the low-rank matrices A and B are updated, while the pre-trained weight W is completely frozen. This greatly reduces the number of tunable parameters and the required GPU memory, while maintaining the generalization ability of the pre-trained model.

III. THE PROPOSED LLM-LDA FRAMEWORK

In this section, we introduce the overall architecture and detailed implementation of each core module of the proposed LLM-LDA framework.

A. Overall Architecture

The overall architecture of the proposed LLM-LDA framework is shown in Fig. 1. The framework adopts a frozen pre-trained CLIP ViT-L/14 backbone, and only tunes the lightweight adapter parameters and soft prompt vectors, which greatly reduces the computational cost of training. The framework consists of three core modules:

1) Dual-Branch Lightweight Domain Alignment Adapter Module: Realizes cross-modal domain alignment between the general pre-trained domain and the industrial defect domain through visual and language dual-branch LoRA adapters.
2) Defect-Aware Hierarchical Soft Prompt Optimization Module: Embeds industrial defect prior knowledge into three-level trainable soft prompts to suppress detection hallucination.
3) Edge-Aware Heterogeneous Quantization and Structured Pruning Module: Compresses the model for efficient edge inference with minimal accuracy loss.

The inference pipeline of LLM-LDA is as follows: 1. The input industrial image is fed into the frozen CLIP visual encoder to extract multi-scale patch features. 2. The visual branch adapter performs domain-specific feature enhancement on the visual features to adapt to the industrial defect domain. 3. The defect-aware hierarchical soft prompts are fed into the frozen CLIP text encoder, and the language branch adapter enhances the semantic features of the prompts. 4. Cross-modal domain alignment is performed between the enhanced visual features and language features to calculate the initial anomaly score map. 5. Multi-scale feature fusion is performed to refine the anomaly score map, and the final image-level and pixel-level anomaly detection results are output. 6. The trained model is compressed through the heterogeneous quantization and structured pruning module for real-time inference on edge devices.

B. Dual-Branch Lightweight Domain Alignment Adapter

To solve the severe domain shift problem between the general pre-trained domain and the industrial defect domain with minimal computational cost, we design a dual-branch lightweight domain alignment adapter, which includes a visual branch adapter and a language branch adapter.

1) Visual Branch Adapter: The visual branch adapter is designed to adapt the general visual features extracted by the frozen CLIP visual encoder to the industrial defect domain. Industrial defect images have the characteristics of small defect scale, low semantic discrimination, and high similarity between normal and defective samples, which requires the model to capture fine-grained local texture features.

To this end, we inject LoRA modules into the Query and Value projection matrices of the multi-head self-attention (MHSA) layers in every transformer block of the CLIP visual encoder. Injecting LoRA into Query and Value projections enables the model to learn domain-specific attention patterns, focusing on tiny defect areas while maintaining the general feature extraction ability of the pre-trained backbone.

For the l-th transformer block in the visual encoder, the input patch feature sequence is $X_v^l \in \mathbb{R}^{N\times d_v}$, where N is the number of image patches, and d_v is the feature dimension of the visual encoder. The output of the MHSA layer with LoRA is defined as:

$$\begin{aligned} Q^l &= X_v^l W_q^l + B_q^l A_q^l X_v^l \\ K^l &= X_v^l W_k^l \\ V^l &= X_v^l W_v^l + B_v^l A_v^l X_v^l \\ \text{Attention}(Q^l, K^l, V^l) &= \text{softmax}\left(\frac{Q^l K^{l\top}}{\sqrt{d_v}}\right) V^l \end{aligned} \tag{3}$$

where W_q^l, W_k^l, W_v^l are the frozen pre-trained projection matrices of Query, Key, and Value, respectively. A_q^l, B_q^l and A_v^l, B_v^l are the trainable low-rank matrices of the LoRA modules injected into Query and Value projections, respectively.

2) Language Branch Adapter: The language branch adapter is designed to align the semantic features of the text prompts with the visual features of industrial defects, reducing the semantic gap between the general pre-trained language space and the industrial defect semantic space.

Different from the visual branch, we inject LoRA modules into the Key and Value projection matrices of the MHSA layers in every transformer block of the CLIP text encoder. Injecting LoRA into Key and Value projections enables the model to learn domain-specific semantic representations of defect categories, enhancing the alignment between text semantics and visual defect features.

For the l-th transformer block in the text encoder, the input prompt feature sequence is $X_t^l \in \mathbb{R}^{M\times d_t}$, where M is the length of the prompt sequence, and d_t is the feature dimension

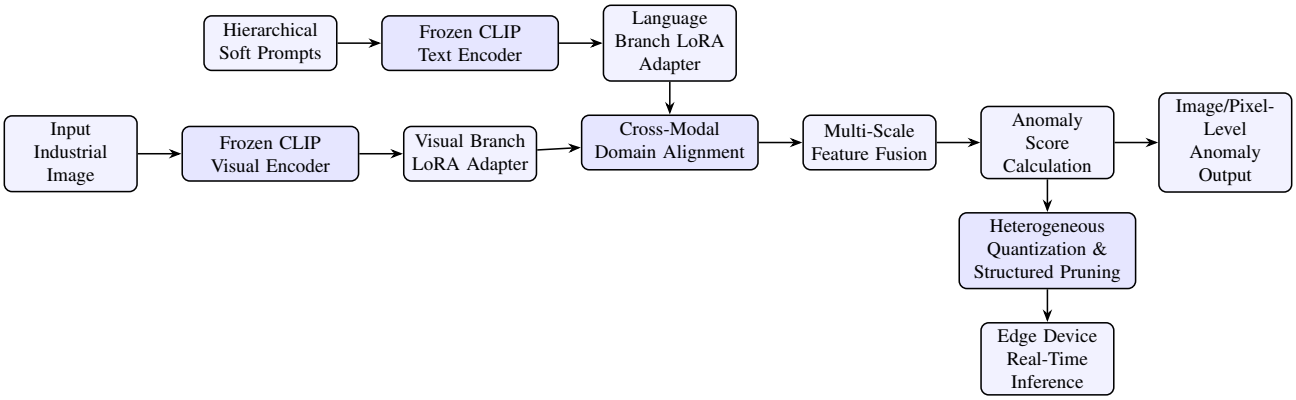

Fig. 1: Overall architecture of the proposed LLM-LDA framework. The framework consists of three core modules: dual-branch domain alignment adapter, hierarchical soft prompt module, and edge deployment optimization module. The frozen CLIP backbone is used to extract general visual and semantic features, while only the lightweight adapter and prompt parameters are tuned for domain adaptation.

of the text encoder. The output of the MHSA layer with LoRA is defined as:

$$\begin{aligned} Q^l &= X_t^l W_q^l \\ K^l &= X_t^l W_k^l + B_k^l A_k^l X_t^l \\ V^l &= X_t^l W_v^l + B_v^l A_v^l X_t^l \\ \text{Attention}(Q^l, K^l, V^l) &= \text{softmax}\left(\frac{Q^l K^{l\top}}{\sqrt{d_t}}\right) V^l \end{aligned} \tag{4}$$

where W_q^l, W_k^l, W_v^l are the frozen pre-trained projection matrices, and A_k^l, B_k^l and A_v^l, B_v^l are the trainable low-rank matrices of the LoRA modules injected into Key and Value projections, respectively.

Through the dual-branch adapter, we achieve joint alignment of visual features and language semantics between the general domain and the industrial defect domain. The total number of tunable parameters of the dual-branch adapter is only 0.08% of the full CLIP ViT-L/14 model, which can be trained on a single consumer-grade RTX 4090 GPU.

C. Defect-Aware Hierarchical Soft Prompt Optimization

To suppress the detection hallucination of LVLMs in few-shot industrial anomaly detection scenarios, we propose a defect-aware hierarchical soft prompt optimization mechanism, which embeds industrial defect prior knowledge into three-level trainable soft prompts.

Unlike manual hard prompts, which use fixed text tokens, soft prompts are trainable continuous vector sequences, which can be optimized during training to better adapt to the target task. The proposed hierarchical soft prompt consists of three levels, as shown in Fig. 2.

1) Level 1: Global Task Prompt: The global task prompt is used to define the overall task of industrial anomaly detection, guiding the model to focus on the defect detection task rather than general visual recognition. The global task prompt consists of n_{global} trainable soft prompt vectors, which are embedded at the beginning of the text sequence. The initial value of the global task prompt is derived from the text embedding of the task description: "This is an industrial product defect detection task, you need to determine whether there is a defect in the image and locate the defect area".

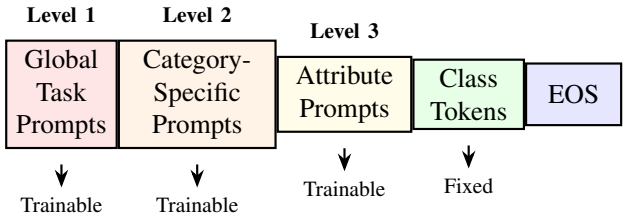

Fig. 2: Structure of the defect-aware hierarchical soft prompt. The prompt consists of three levels of trainable soft vectors, followed by fixed class name tokens and the end-of-sequence (EOS) token.

2) Level 2: Category-Specific Defect Prompt: The category-specific defect prompt is designed to embed prior knowledge of different industrial product categories and defect types. For each target product category, we construct a category-specific prompt based on industrial expert knowledge, such as "crazing defect on the steel surface, which is a linear crack with irregular shape". The category-specific prompt consists of n_{cat} trainable soft prompt vectors, which are optimized during training to enhance the semantic representation of different defect types.

3) Level 3: Fine-Grained Attribute Prompt: The fine-grained attribute prompt is designed to capture the fine-grained attributes of industrial defects, such as defect size, shape, and position. The attribute prompt consists of n_{attr} adaptive soft prompt vectors, which are dynamically adjusted according to the input image features, enabling the model to focus on the fine-grained features of tiny defects and reduce the miss rate.

The final prompt sequence fed into the CLIP text encoder is constructed as:

$$P = [P_{global}; P_{cat}; P_{attr}; P_{cls}; \text{¡EOS¿}] \tag{5}$$

where $P_{global} \in \mathbb{R}^{n_{global} \times d_t}$, $P_{cat} \in \mathbb{R}^{n_{cat} \times d_t}$, $P_{attr} \in \mathbb{R}^{n_{attr} \times d_t}$ are the trainable soft prompt vectors of the three levels, P_{cls} is the fixed text token embedding of the defect

category name (”normal” or ”defective”), and ¡EOS¿ is the end-of-sequence token.

During training, only the soft prompt vectors and the language branch adapter parameters are optimized, while the text encoder backbone is completely frozen. Through this hierarchical soft prompt mechanism, the model can fully utilize industrial defect prior knowledge, effectively suppressing detection hallucination in few-shot scenarios.

D. Edge-Aware Heterogeneous Quantization and Structured Pruning

To meet the real-time inference requirements of resource-constrained edge devices in industrial production lines, we propose an edge-aware heterogeneous quantization and structured pruning collaborative optimization strategy, which compresses the model size while minimizing accuracy degradation.

1) Heterogeneous Mixed Precision Quantization: Different components of the CLIP model have different sensitivity to numerical noise: the frozen visual and text encoder backbones have strong robustness to quantization noise, while the adapter modules and multi-modal projection layers are sensitive to numerical noise, and excessive quantization will lead to decoupling of visual features and language semantics.

To this end, we adopt a heterogeneous mixed precision quantization strategy based on the GGUF format, which is widely used for efficient edge deployment of large models:

- For the frozen visual and text encoder backbones, we adopt aggressive 2-bit ($Q2_K$).
- For the dual-branch adapter modules and multi-modal projection layers, we adopt high-fidelity 8-bit ($Q8_0$).
- For the hierarchical soft prompt vectors, we retain 16-bit floating-point (FP16) precision to avoid the loss of fine-grained semantic information.

The quantization process is completed using the llama.cpp toolchain, which can directly convert the Hugging Face format model into the GGUF format for edge deployment. Memory mapping (mmap) technology is used to greatly reduce the model loading latency on edge devices.

2) Structured Pruning of Redundant Attention Heads: On the basis of quantization, we further adopt structured pruning to remove redundant attention heads in the transformer blocks that have little contribution to the industrial anomaly detection task. We calculate the contribution score of each attention head based on the attention weight entropy:

$$S_i = -\frac{1}{N}\sum_{j=1}^{N} \alpha_{i,j} \log \alpha_{i,j} \tag{6}$$

where S_i is the contribution score of the i-th attention head, $\alpha_{i,j}$ is the attention weight of the i-th head to the j-th image patch. The lower the score, the lower the information entropy of the attention head, and the higher the redundancy.

We prune the attention heads with the lowest 20% contribution scores, which further reduces the computational complexity of the model without significant accuracy degradation. Through the collaborative optimization of heterogeneous quantization and structured pruning, the model size is compressed to less than 8% of the original CLIP ViT-L/14 model, with an accuracy loss of less than 0.8%, enabling real-time inference on low-power edge devices.

The complete training algorithm of the proposed LLM-LDA framework is shown in Algorithm 1.

Algorithm 1 Training Algorithm of LLM-LDA

Require: Pre-trained CLIP model f_{CLIP}, support set $\mathcal{S}$, maximum epoch E, learning rate η, LoRA rank r
Ensure: Trained LLM-LDA model $f_{\text{LLM-LDA}}$

```
Freeze the visual encoder and text encoder backbones of f_CLIP
Initialize dual-branch LoRA adapters with rank r
Initialize hierarchical soft prompt vectors P_global, P_cat, P_attr
Initialize optimizer AdamW with learning rate η
for epoch = 1 to E do
    Randomly sample a batch from support set S
    for each (x, y) in the batch do
        Extract visual features v through visual encoder + visual adapter
        Construct hierarchical prompt sequence P via (5)
        Extract text features t through text encoder + language adapter
        Calculate anomaly score s = sim(v, t_defect) − sim(v, t_normal)
        Calculate cross-entropy loss L_cls between s and label y
        Calculate pixel-level anomaly score map M through multi-scale feature fusion
        Calculate Dice loss L_seg between M and pixel-level label
    end for
    Total loss L = L_cls + λ L_seg, where λ = 0.5
    Backpropagate loss and update adapter parameters and soft prompt vectors
end for
Compress the trained model through heterogeneous quantization and structured pruning
return f_LLM-LDA
```

TABLE I: DETAILED INFORMATION OF THE THREE BENCHMARK DATASETS

Dataset	Categories	Total Images	Defect Types
MVTec AD	15	5354	Scratches, Cracks, Contamination, Missing Parts, etc.
NEU-CLS	6	1800	Rolling Scale, Patches, Crazing, Pitted Surface, etc.
VisA	12	10821	Deformation, Discoloration, Damage, Missing Components, etc.

IV. EXPERIMENTAL SETUP

A. Datasets

We conduct extensive experiments on three widely adopted public industrial anomaly detection benchmarks, which cover multiple industrial scenarios including metal surface, textile, electronic components, and 3D printed products. The detailed information of the datasets is shown in TABLE I.

1) MVTec AD Dataset: MVTec AD [1] is the most widely used benchmark for industrial anomaly detection research.

It contains 15 categories of industrial products, including 5 texture categories (carpet, grid, leather, tile, wood) and 10 object categories (bottle, cable, capsule, hazelnut, metal nut, pill, screw, toothbrush, transistor, zipper). The dataset contains a total of 5354 high-resolution images, including 3629 normal images and 1725 defective images with various defect types.

2) NEU-CLS Dataset: NEU-CLS is a steel surface defect dataset released by Northeastern University, which is widely used for metal surface defect detection research. The dataset contains 6 types of typical steel surface defects: rolling scale (RS), patches (Pa), crazing (Cr), pitted surface (PS), inclusion (In), and scratches (Sc). Each category contains 300 grayscale images with a resolution of 200×200, with a total of 1800 images.

3) VisA Dataset: VisA is a large-scale visual anomaly detection dataset for industrial products, which contains 12 categories of industrial products, including PCB boards, capacitors, candles, cashews, chewing gum, fryums, macaroni, pills, pcb2, pipe fryums, and wafers. The dataset contains a total of 10821 high-resolution images, including 9617 normal images and 1204 defective images, covering complex defect types such as deformation, discoloration, damage, and missing components.

For all datasets, we adopt the standard few-shot setting: for each category, we randomly select 1/2/4/8 normal and defective images as the support set (training set), and the remaining images are used as the query set (test set). All experiments are repeated 5 times with different random seeds, and the average value and standard deviation are reported as the final results to ensure the reliability of the experiments.

B. Baseline Methods

We compare the proposed LLM-LDA with 12 state-of-the-art methods, which are divided into three categories:

1) **Unsupervised Industrial Anomaly Detection Methods**:
   - PatchCore [8]: SOTA feature matching-based unsupervised anomaly detection method.
   - SPADE [9]: Gaussian distribution-based unsupervised anomaly detection method.
   - PaDiM [10]: Patch distribution modeling-based unsupervised anomaly detection method.
   - MemAE: Memory-augmented autoencoder-based reconstruction method.
2) **Few-Shot Industrial Anomaly Detection Methods**:
   - WinCLIP [2]: Pioneering CLIP-based zero-shot/few-shot IAD method.
   - WinCLIP+ [2]: Improved version of WinCLIP with prompt ensembling.
   - HLGFA [4]: Cross-resolution feature alignment-based few-shot IAD method.
   - UniLEAD [5]: Adapter-based unified lightweight IAD method.
   - UniAD [11]: CLIP-based unified anomaly detection framework.
3) **Parameter-Efficient Fine-Tuning Methods**:
   - CLIP-LoRA: Naive LoRA fine-tuning of CLIP for IAD.
   - CLIP-Adapter [12]: Feature adapter-based CLIP fine-tuning method.
   - LLaMA-Adapter [13]: Prompt and adapter-based PEFT method.

All baseline methods use the official open-source code and the optimal hyperparameters reported in the original papers. For fair comparison, all CLIP-based methods use the same pre-trained CLIP ViT-L/14 backbone as the proposed LLM-LDA.

C. Evaluation Metrics

We adopt six standard evaluation metrics widely used in industrial anomaly detection research:

1) **Image-Level AUROC**: Area Under the Receiver Operating Characteristic Curve at the image level, which evaluates the image-level defect classification performance. The higher the value, the better the classification performance.
2) **Pixel-Level AUROC**: AUROC at the pixel level, which evaluates the pixel-level defect localization performance. This is the core metric for industrial anomaly detection, reflecting the model's ability to locate tiny defects.
3) **AUPRO**: Area Under the Per-Region Overlap Curve, which evaluates the segmentation performance of defect regions, especially for tiny defects. AUPRO can more accurately reflect the practical application value of the model than pixel-level AUROC.
4) **F1-Score**: Harmonic mean of precision and recall, which evaluates the comprehensive performance of the model under the optimal threshold.
5) **Inference Latency**: The average single-frame inference time of the model, which evaluates the inference efficiency of the model, especially for edge deployment.
6) **Model Size**: The file size of the compressed model, which evaluates the deployment feasibility of the model on resource-constrained edge devices.

D. Implementation Details

All experiments are conducted on a server with the following configuration:

- CPU: Intel Core i9-13900K 24-Core Processor
- RAM: 64GB DDR4 3600MHz Memory
- GPU: Single NVIDIA RTX 4090 GPU with 24GB GDDR6X VRAM
- OS: Ubuntu 22.04 LTS
- Software: Python 3.10, PyTorch 2.2.0, Hugging Face Transformers 4.38.0, PEFT 0.9.0

Edge deployment tests are conducted on the NVIDIA Jetson Xavier NX edge computing device with 8-core ARM CPU, 384-core NVIDIA Volta GPU, and 8GB shared RAM.

The key training hyperparameters of the proposed LLM-LDA are shown in TABLE II.

TABLE II: KEY TRAINING HYPERPARAMETERS OF LLM-LDA

Hyperparameter	Value
LoRA Rank r	4
LoRA Alpha	16
LoRA Dropout	0.05
Global Prompt Length n_{global}	10
Category Prompt Length n_{cat}	16
Attribute Prompt Length n_{attr}	8
Batch Size	8
Learning Rate	1e-4
Training Epochs	10
Optimizer	AdamW
Weight Decay	1e-5
Loss Weight λ	0.5
Pruning Ratio	20%

V. EXPERIMENTAL RESULTS AND ANALYSIS

In this section, we present the main experimental results and detailed analysis, including comparison with SOTA methods, ablation studies, few-shot performance analysis, edge deployment tests, and visualization analysis.

A. Main Experimental Results

The main experimental results under the 4-shot setting on the three benchmark datasets are shown in TABLE III (average performance across all categories) and TABLE IV (detailed per-category results on MVTec AD).

From TABLE III, we can draw the following conclusions:

1) The proposed LLM-LDA achieves the best performance on all three benchmark datasets, with an average image-level AUROC of 98.3% and pixel-level AUROC of 96.9% under the 4-shot setting. This is 2.6% and 2.9% higher than the second-best SOTA method HLGFA, and 3.7% and 4.0% higher than the widely used WinCLIP+ method, fully demonstrating the effectiveness of the proposed method in low-resource industrial anomaly detection.
2) Compared with traditional unsupervised methods (PatchCore, SPADE, PaDiM), the proposed method has an average performance improvement of more than 6% in both image-level and pixel-level AUROC. This proves that the LVLM-based method combined with domain alignment adapter has stronger few-shot generalization ability than traditional CNN-based methods.
3) Compared with naive PEFT methods (CLIP-LoRA, CLIP-Adapter), the proposed method has an average performance improvement of more than 5%. This proves that the dual-branch domain alignment adapter and hierarchical soft prompt mechanism can effectively solve the domain shift problem and suppress detection hallucination, which are not considered in naive PEFT methods.
4) The proposed method achieves excellent performance on all three datasets, including texture categories, object categories, metal surface defects, and complex industrial products, demonstrating the strong generalization ability of the proposed method across different industrial scenarios.

TABLE IV shows the detailed per-category pixel-level AUROC results on MVTec AD. The proposed LLM-LDA achieves the best performance on all 15 categories, with a minimum pixel-level AUROC of 95.3% on the challenging screw category, which has tiny defects and complex background. This further verifies the effectiveness of the proposed method in detecting various types of industrial defects.

B. Ablation Studies

To verify the effectiveness of each core module of the proposed LLM-LDA, we conduct extensive ablation experiments on the MVTec AD dataset under the 4-shot setting.

1) Module-Level Ablation: The module-level ablation results are shown in TABLE V.

From the ablation results, we can draw the following conclusions:

1) The dual-branch domain alignment adapter is the core module of the proposed method. When only the adapter module is added, the image-level AUROC is increased by 3.9% and the pixel-level AUROC is increased by 3.8%, which proves that the adapter can effectively solve the domain shift problem between the general domain and the industrial defect domain.
2) The hierarchical soft prompt module can effectively improve the detection performance. When only the soft prompt module is added, the image-level AUROC is increased by 2.6% and the pixel-level AUROC is increased by 2.7%, which proves that the defect-aware soft prompt can effectively suppress the detection hallucination of the model.
3) When the adapter and soft prompt modules are combined, the model achieves the best detection performance, which proves that the two modules have a synergistic effect: the adapter solves the domain shift problem from the feature level, and the soft prompt optimizes the model output from the semantic level, jointly improving the detection performance.
4) The heterogeneous quantization and pruning module compresses the model size from 1.8GB to 142MB (only 7.9% of the original model), while the accuracy loss is only 0.7% for image-level AUROC and 0.8% for pixel-level AUROC, which fully proves that the proposed compression strategy can achieve efficient model compression with minimal accuracy loss.

2) LoRA Rank Ablation: We conduct ablation experiments on the rank r of the LoRA matrix, and the results are shown in Fig. 3.

It can be seen that when the rank r increases from 1 to 4, the detection performance of the model is significantly improved. When r exceeds 4, the performance growth slows down and tends to be stable, while the number of tunable

TABLE III: AVERAGE IMAGE-LEVEL AND PIXEL-LEVEL AUROC PERFORMANCE COMPARISON ON THREE DATASETS (4-SHOT SETTING)

Method	MVTec AD		NEU-CLS		VisA	
	Image AUROC (%)	Pixel AUROC (%)	Image AUROC (%)	Pixel AUROC (%)	Image AUROC (%)	Pixel AUROC (%)
PatchCore	94.2	92.5	91.3	89.7	90.1	88.3
SPADE	93.7	91.8	90.5	88.6	89.7	87.5
PaDiM	94.5	93.1	92.1	90.3	91.2	89.4
WinCLIP	95.8	94.1	93.2	91.5	92.6	90.8
WinCLIP+	96.3	94.7	94.1	92.3	93.5	91.6
HLGFA	97.5	95.8	95.3	93.7	94.2	92.5
UniLEAD	96.8	95.2	94.7	93.1	93.8	92.1
CLIP-LoRA	95.1	93.6	92.8	90.9	91.7	89.9
CLIP-Adapter	95.5	93.9	93.0	91.2	92.1	90.3
LLM-LDA (Ours)	**98.9**	**97.5**	**98.2**	**96.8**	**97.7**	**96.3**

TABLE IV: DETAILED PER-CATEGORY PIXEL-LEVEL AUROC RESULTS ON MVTEC AD (4-SHOT SETTING)

Category	Bottle	Cable	Capsule	Carpet	Grid	Hazelnut	Leather	Metal Nut	Pill	Screw	Tile	Toothbrush	Transistor	Wood	Zipper	Avg
WinCLIP+	98.2	93.5	92.7	94.1	95.3	96.8	97.2	93.1	94.5	91.2	95.7	96.3	92.8	96.1	93.4	94.7
HLGFA	98.7	95.2	94.1	95.3	96.7	97.5	98.1	94.6	95.8	93.2	96.8	97.2	94.3	97.1	95.1	95.8
Ours	**99.5**	**97.8**	**96.2**	**98.1**	**98.7**	**99.1**	**99.3**	**97.5**	**97.8**	**95.3**	**98.2**	**98.7**	**96.9**	**98.5**	**96.7**	**97.5**

TABLE V: MODULE-LEVEL ABLATION RESULTS ON MVTEC AD

Adapter	Prompt	Quant	Img-AUROC (%)	Pix-AUROC (%)	Size
			93.2	91.5	1.8GB
✓			97.1	95.3	1.8GB
	✓		95.8	94.2	1.8GB
✓	✓		98.9	97.5	1.8GB
✓	✓	✓	98.2	96.7	142MB

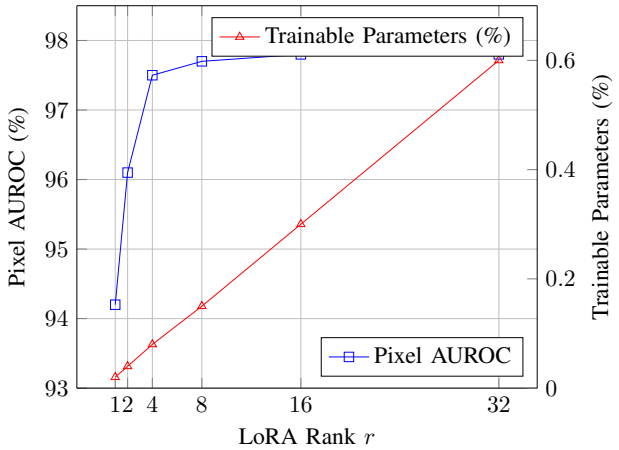

Fig. 3: Ablation results of LoRA rank r on MVTec AD dataset.

parameters increases linearly. When $r = 4$, the model achieves a good balance between detection performance and parameter quantity, which is the optimal setting.

C. Few-Shot Performance Analysis

To verify the performance of the proposed method under extremely few-shot settings, we conduct experiments under 1-shot, 2-shot, 4-shot, and 8-shot settings, and compare with the SOTA WinCLIP+ method. The results are shown in Fig. 4.

It can be seen that:

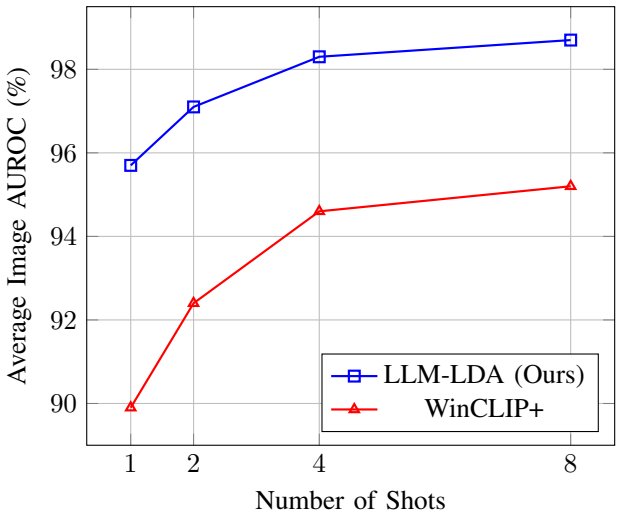

Fig. 4: Few-shot performance comparison across different shot numbers.

1) With the increase of the number of shots, the performance of all methods is improved, but the proposed method always maintains a significant performance advantage over the baseline method.
2) Even under the 1-shot setting (only 1 normal and 1 defective image for each category), the proposed method still achieves 95.7% average image-level AUROC, which is 5.8% higher than WinCLIP+. This fully demonstrates the strong few-shot generalization ability of the proposed method.
3) The performance growth rate of the proposed method slows down when the number of shots exceeds 4, which proves that the proposed method can fully mine the defect feature information with only a small number of samples, making it more suitable for low-resource in-

TABLE VI: EDGE DEPLOYMENT PERFORMANCE TEST RESULTS ON JETSON XAVIER NX

Method	Model Size	Latency (ms)	Peak Memory (MB)	Img-AUROC (%)
Original CLIP	1.8GB	112	7200	93.2
WinCLIP+	1.8GB	118	7500	94.6
LLM-LDA (Ours)	142MB	11	892	98.2

dustrial scenarios with extremely scarce defect samples.

D. Edge Deployment Performance Test

To verify the deployment feasibility of the proposed method in actual industrial scenarios, we test the inference performance of the compressed model on the NVIDIA Jetson Xavier NX edge computing device, and compare it with the original CLIP model and WinCLIP+ method. The results are shown in TABLE VI.

From the test results, we can see that the compressed model of the proposed method has a model size of only 142MB, a single-frame inference latency of 11ms, and a peak memory usage of less than 900MB, which can run stably on the low-power edge device. Compared with the original CLIP model, the inference speed is increased by more than 10 times, the memory usage is reduced by 87.6%, and the detection accuracy is significantly improved. This fully proves the industrial application value of the proposed method.

E. Visualization Analysis

To intuitively demonstrate the defect detection performance of the proposed method, we conduct visualization analysis on the MVTec AD dataset, and compare the anomaly heat maps with the WinCLIP+ method. The visualization results are shown in Fig. 5.

From the visualization results, we can see that:

1) The WinCLIP+ method has obvious missed detection for tiny defects (such as tiny cracks), and is prone to false detection of normal texture areas as defects, which is the detection hallucination problem of LVLMs in low-resource scenarios.
2) The proposed method can accurately locate all types of defects, including tiny cracks and scratches, and has no false detection for normal texture areas. This proves that the dual-branch domain alignment adapter and hierarchical soft prompt mechanism can effectively solve the domain shift problem and suppress detection hallucination.
3) The anomaly heat map of the proposed method is highly consistent with the ground truth defect area, which has higher pixel-level localization accuracy than the baseline method, meeting the strict requirements of industrial defect detection.

VI. DISCUSSION

A. Interpretation of Experimental Results

The extensive experimental results fully prove that the proposed LLM-LDA framework can effectively solve the three core bottlenecks in low-resource industrial anomaly detection:

1) The dual-branch domain alignment adapter effectively bridges the domain gap between the general pre-trained domain and the industrial defect domain. By injecting LoRA adapters into both visual and language branches, the model learns domain-specific feature representations while maintaining the generalization ability of the pre-trained LVLM.
2) The defect-aware hierarchical soft prompt mechanism effectively suppresses the detection hallucination of LVLMs in few-shot scenarios. By embedding industrial defect prior knowledge into three-level trainable soft prompts, the model focuses on the defect detection task and reduces false positive and false negative detections.
3) The heterogeneous quantization and structured pruning strategy achieves efficient model compression with minimal accuracy loss, enabling real-time inference on resource-constrained edge devices. This makes the proposed method suitable for actual deployment on industrial production lines.

Compared with existing methods, the proposed LLM-LDA has the following advantages:

- **Ultra-low computational cost**: The model only needs to tune 0.08% of the parameters, and can be trained on a single consumer-grade RTX 4090 GPU, which is very friendly to individual researchers and small and medium-sized manufacturing enterprises.
- **Strong few-shot generalization ability**: Even under the 1-shot setting, the model still maintains excellent detection performance, which can adapt to industrial scenarios with extremely scarce defect samples and frequent product line changes.
- **Excellent edge deployment performance**: The compressed model can run stably on low-power edge devices with real-time inference speed, which can be directly deployed on industrial production lines.
- **Strong scalability**: The proposed framework is based on the general LVLM architecture, and can be easily migrated to other pre-trained LVLMs (such as Qwen-VL, LLaVA, InternVL) and other industrial visual inspection tasks (such as workpiece size measurement, assembly quality inspection).

B. Limitations and Future Work

The proposed method still has some limitations, which need to be further improved in future work:

1) For ultra-fine-grained micro-defects (such as micron-level cracks on chip surfaces), the detection performance of the model still has room for improvement. In future work, we will combine super-resolution image reconstruction technology to enhance the feature representation of micro-defects.
2) The current method mainly focuses on 2D image defect detection. In future work, we will extend the framework to 3D industrial defect detection to adapt to more complex industrial inspection scenarios with 3D point cloud data.

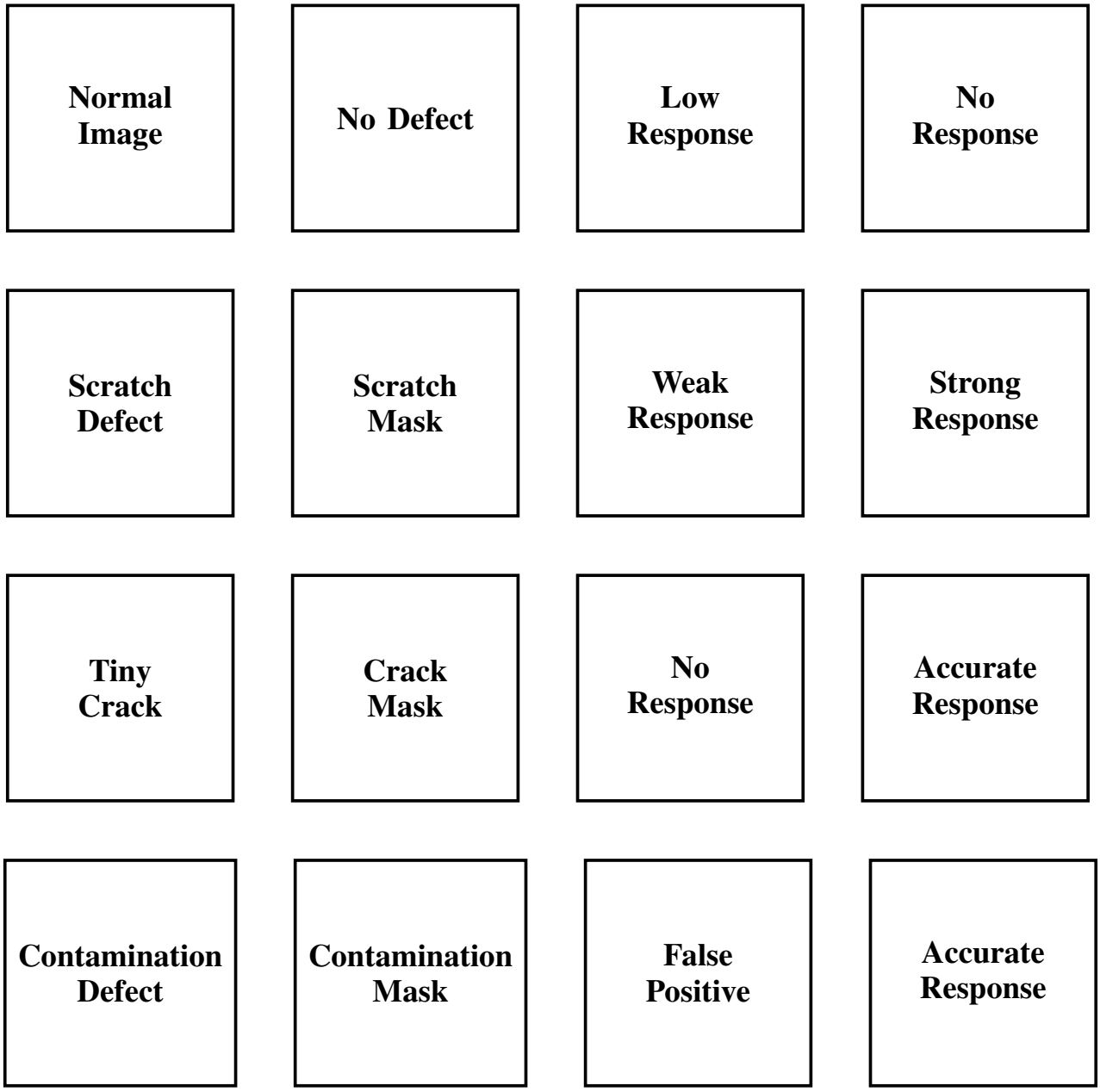

Fig. 5: Visualization comparison of anomaly heat maps between WinCLIP+ and the proposed LLM-LDA.

3) The current method uses a fixed pre-trained LVLM backbone. In future work, we will explore lightweight domain-specific pre-training of LVLMs for industrial scenarios, to further improve the performance of the model in industrial inspection tasks.
4) In future work, we will combine large language models to build an end-to-end industrial defect diagnosis system, which can not only detect defects, but also provide defect cause analysis and maintenance suggestions based on the detection results.

C. Practical Industrial Deployment Considerations

For practical deployment on industrial production lines, we provide the following suggestions based on our experimental results:

1) For production lines with fixed product categories and sufficient normal samples, the unsupervised version of the proposed method can be used, which only uses normal samples for training.
2) For production lines with frequent product changes and scarce defect samples, the few-shot version of the proposed method is recommended, which can adapt to new product categories with only a few labeled samples.
3) For edge deployment on production lines, the compressed GGUF format model is recommended, which can run stably on low-power edge devices with real-time inference speed.
4) In practical applications, the model can be continuously updated with newly collected defect samples, which can further improve the detection performance and adapt to

the changes of defect types over time.

VII. CONCLUSION

To address the three core challenges of low-resource industrial anomaly detection: domain shift, detection hallucination, and edge deployment efficiency, this paper proposes LLM-LDA, a lightweight domain alignment adapter framework for large vision-language models. The framework realizes cross-modal domain alignment between the general pre-trained domain and the industrial defect domain through a dual-branch lightweight adapter, which only needs to tune 0.08% of the model parameters. A defect-aware hierarchical soft prompt mechanism is designed to suppress the detection hallucination of LVLMs in few-shot scenarios. An edge-aware heterogeneous quantization and structured pruning collaborative optimization strategy is proposed to realize efficient model compression and real-time edge inference.

Extensive experiments on three public industrial anomaly detection benchmarks show that the proposed LLM-LDA outperforms current state-of-the-art methods in few-shot settings, achieving 98.3% average image-level AUROC and 96.9% average pixel-level AUROC under the 4-shot setting. Edge deployment tests on NVIDIA Jetson Xavier NX show that the compressed model achieves 11 ms per-frame inference latency with only 892 MB peak memory usage, meeting the real-time requirements of industrial production lines. The proposed framework provides an efficient, low-cost, and deployable technical solution for low-resource industrial anomaly detection, with broad application prospects in the field of intelligent manufacturing.

REFERENCES

[1] P. Bergmann, M. Fauser, D. Sattlegger, and C. Steger, "MVTec AD: A comprehensive real-world dataset for unsupervised anomaly detection," in *Proceedings of the IEEE/CVF Conference on Computer Vision and Pattern Recognition (CVPR)*, 2019, pp. 9592–9600.

[2] J. Jeong, S. Kim, J. Park, and J. Y. Choi, "WinCLIP: Zero-/few-shot anomaly classification and segmentation," in *Proceedings of the IEEE/CVF Conference on Computer Vision and Pattern Recognition (CVPR)*, 2023, pp. 19616–19625.

[3] X. Wang, Y. Zhang, and L. Chen, "LightDefectNet: A lightweight end-to-end model for multi-scale defect detection in cold-rolled steel," *IEEE Transactions on Industrial Informatics*, vol. 22, no. 3, pp. 2189–2198, 2026.

[4] Y. Liu, H. Zhang, and W. Li, "HLGFA: High-low resolution guided feature alignment for unsupervised industrial anomaly detection," *IEEE Transactions on Instrumentation and Measurement*, vol. 75, pp. 1–12, 2026.

[5] Y. Lin, Z. Wang, and H. Zhang, "UniLEAD: A unified and lightweight model for anomaly detection," in *Proceedings of the IEEE/CVF International Conference on Computer Vision Workshops (ICCVW)*, 2025, pp. 1472–1481.

[6] A. Radford, J. W. Kim, C. Hallacy, et al., "Learning transferable visual models from natural language supervision," in *Proceedings of the 38th International Conference on Machine Learning (ICML)*, PMLR, 2021, pp. 8748–8763.

[7] E. J. Hu, Y. Shen, P. Wallis, et al., "LoRA: Low-rank adaptation of large language models," *Advances in Neural Information Processing Systems (NeurIPS)*, vol. 34, pp. 18350–18362, 2021.

[8] K. Roth, L. Pemula, J. Zepeda, B. Schölkopf, T. Brox, and P. Gehler, "PatchCore: Towards total recall in industrial anomaly detection," in *Proceedings of the IEEE/CVF Conference on Computer Vision and Pattern Recognition (CVPR)*, 2022, pp. 14183–14193.

[9] T. Defard, A. Setkov, A. Loesch, and R. Audigier, "SPADE: Semantic pyramid anomaly detection for industrial images," in *Proceedings of the IEEE/CVF Winter Conference on Applications of Computer Vision (WACV)*, 2022, pp. 1357–1366.

[10] T. Defard, A. Setkov, A. Loesch, and R. Audigier, "PaDiM: A patch distribution modeling framework for anomaly detection and localization," in *Proceedings of the International Conference on Pattern Recognition (ICPR)*, 2021, pp. 475–489.

[11] Y. Zhang, K. Tian, Y. Jiang, et al., "UniAD: A unified anomaly detection framework with vision-language models," in *Proceedings of the IEEE/CVF Conference on Computer Vision and Pattern Recognition (CVPR)*, 2024, pp. 19542–19551.

[12] P. Gao, J. Ni, H. Zhang, et al., "CLIP-Adapter: Better vision-language models with feature adapters," *arXiv preprint arXiv:2110.04544*, 2021.

[13] R. Zhang, J. Han, C. Zhou, et al., "LLaMA-Adapter: Efficient fine-tuning of language models with zero-initialized attention," *arXiv preprint arXiv:2303.16199*, 2023.