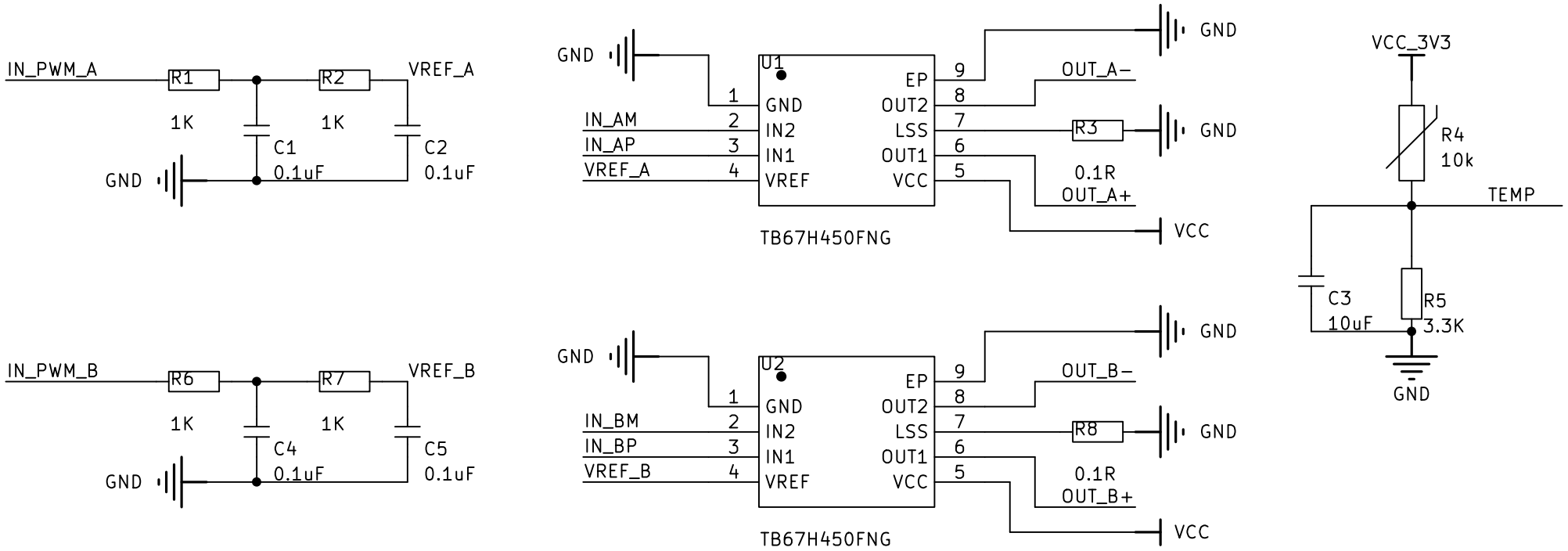
IN_PWM_A
R1
1K
R2
1K
VREF_A
C1
0.1uF
C2
0.1uF
GND
IN_PWM_B
R6
1K
R7
1K
VREF_B
C4
0.1uF
C5
0.1uF
GND
U1
GND
IN_AM
IN_AP
VREF_A
1
2
3
4
GND
IN2
IN1
VREF
EP
OUT2
LSS
OUT1
VCC
9
8
7
6
5
OUT_A−
R3
0.1R
OUT_A+
VCC
TB67H450FNG
U2
GND
IN_BM
IN_BP
VREF_B
1
2
3
4
GND
IN2
IN1
VREF
EP
OUT2
LSS
OUT1
VCC
9
8
7
6
5
OUT_B−
R8
0.1R
OUT_B+
VCC
TB67H450FNG
VCC_3V3
R4
10k
TEMP
C3
10uF
R5
3.3K
GND

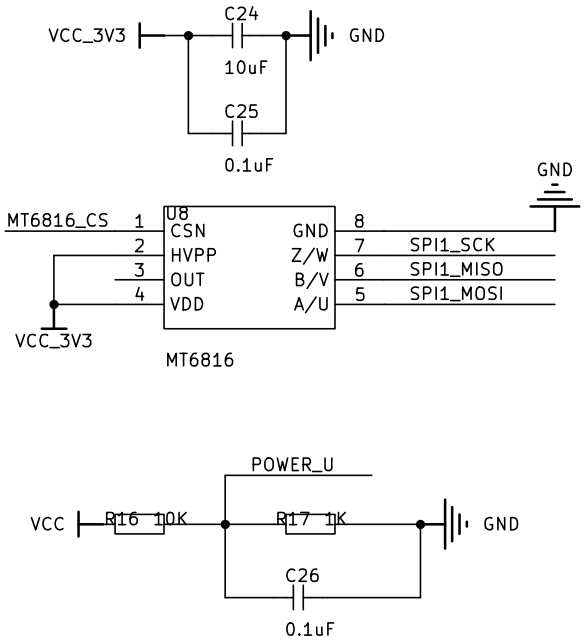
VCC_3V3
C24
10uF
C25
0.1uF
GND
MT6816_CS
U8
CSN
HVPP
OUT
VDD
GND
Z/W
B/V
A/U
SPI1_SCK
SPI1_MISO
SPI1_MOSI
VCC_3V3
MT6816
POWER_U
VCC
R16 10K
R17 1K
C26
0.1uF
GND

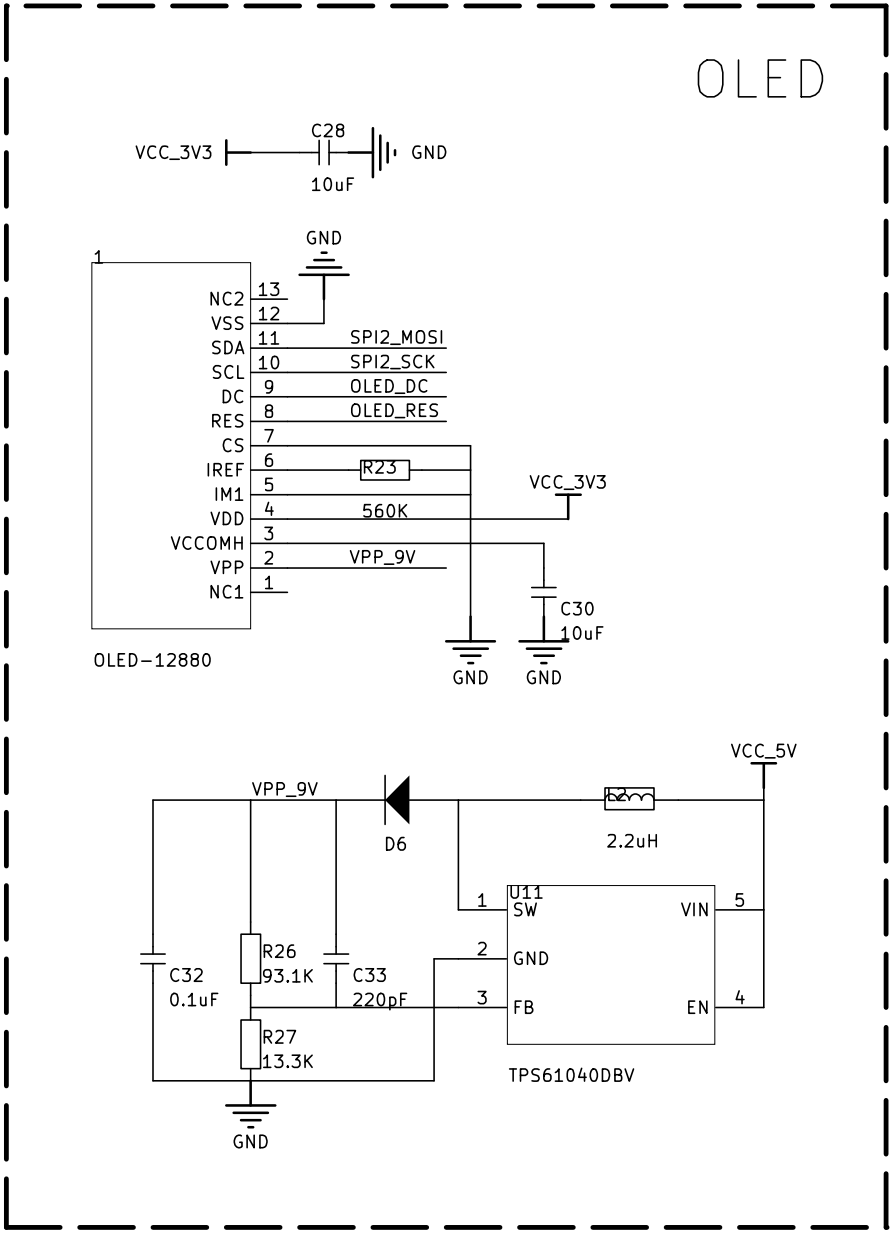
OLED
VCC_3V3
C28
10uF
GND
NC2
VSS
SDA
SCL
DC
RES
CS
IREF
IM1
VDD
VCCOMH
VPP
NC1
SPI2_MOSI
SPI2_SCK
OLED_DC
OLED_RES
R23
560K
VPP_9V
VCC_3V3
C30
10uF
OLED-12880
VCC_5V
VPP_9V
D6
L2
2.2uH
U11
SW
GND
FB
VIN
EN
R26
93.1K
C33
220pF
C32
0.1uF
R27
13.3K
TPS61040DBV

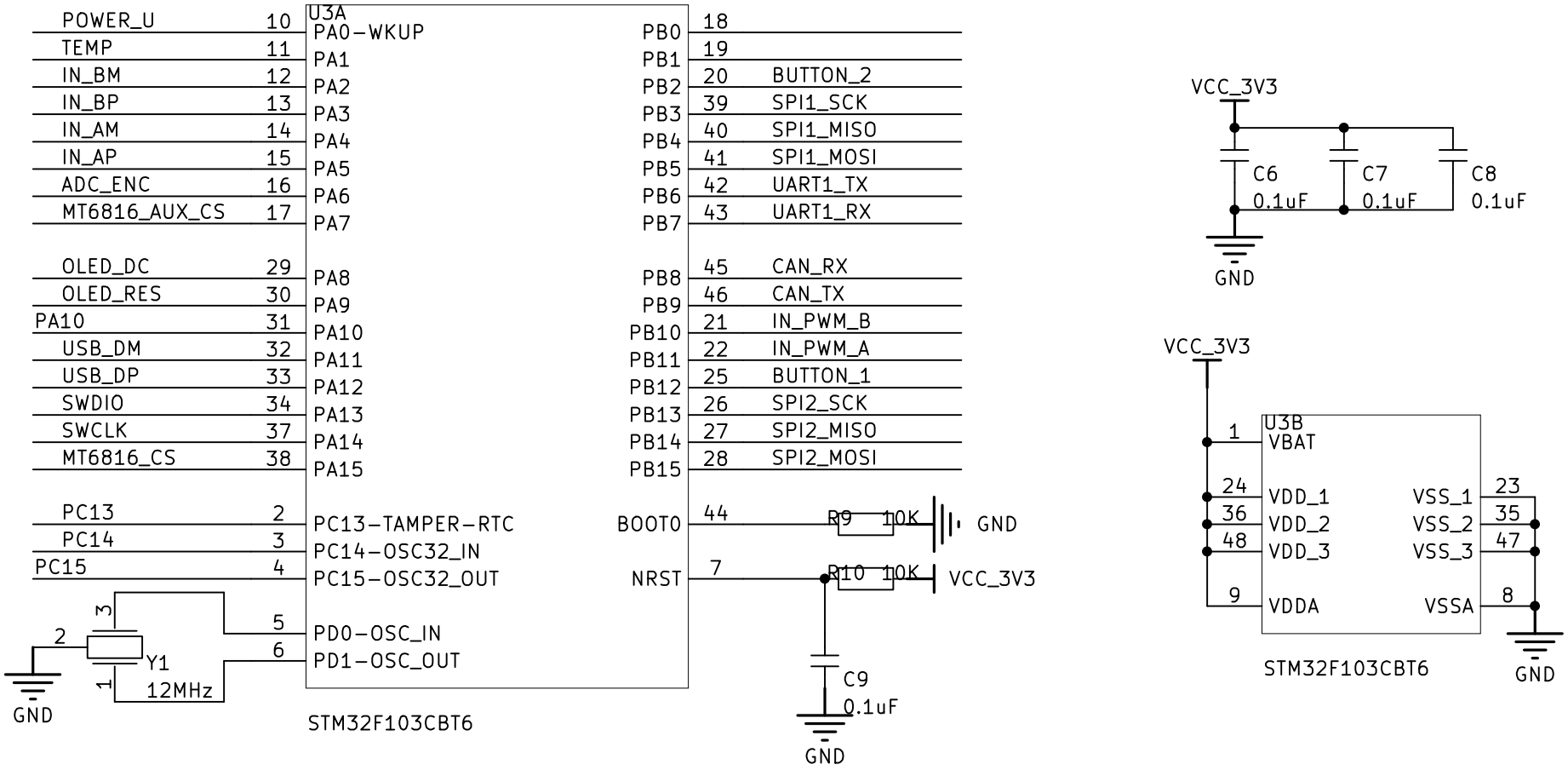
U3A
POWER_U 10 PA0-WKUP
TEMP 11 PA1
IN_BM 12 PA2
IN_BP 13 PA3
IN_AM 14 PA4
IN_AP 15 PA5
ADC_ENC 16 PA6
MT6816_AUX_CS 17 PA7
OLED_DC 29 PA8
OLED_RES 30 PA9
PA10 31 PA10
USB_DM 32 PA11
USB_DP 33 PA12
SWDIO 34 PA13
SWCLK 37 PA14
MT6816_CS 38 PA15
PC13 2 PC13-TAMPER-RTC
PC14 3 PC14-OSC32_IN
PC15 4 PC15-OSC32_OUT
5 PD0-OSC_IN
6 PD1-OSC_OUT
PB0 18
PB1 19
PB2 20 BUTTON_2
PB3 39 SPI1_SCK
PB4 40 SPI1_MISO
PB5 41 SPI1_MOSI
PB6 42 UART1_TX
PB7 43 UART1_RX
PB8 45 CAN_RX
PB9 46 CAN_TX
PB10 21 IN_PWM_B
PB11 22 IN_PWM_A
PB12 25 BUTTON_1
PB13 26 SPI2_SCK
PB14 27 SPI2_MISO
PB15 28 SPI2_MOSI
BOOT0 44
NRST 7
R9 10K
R10 10K
GND
VCC_3V3
C9
0.1uF
Y1
12MHz
STM32F103CBT6
VCC_3V3
C6
0.1uF
C7
0.1uF
C8
0.1uF
U3B
1 VBAT
24 VDD_1
36 VDD_2
48 VDD_3
9 VDDA
VSS_1 23
VSS_2 35
VSS_3 47
VSSA 8
STM32F103CBT6

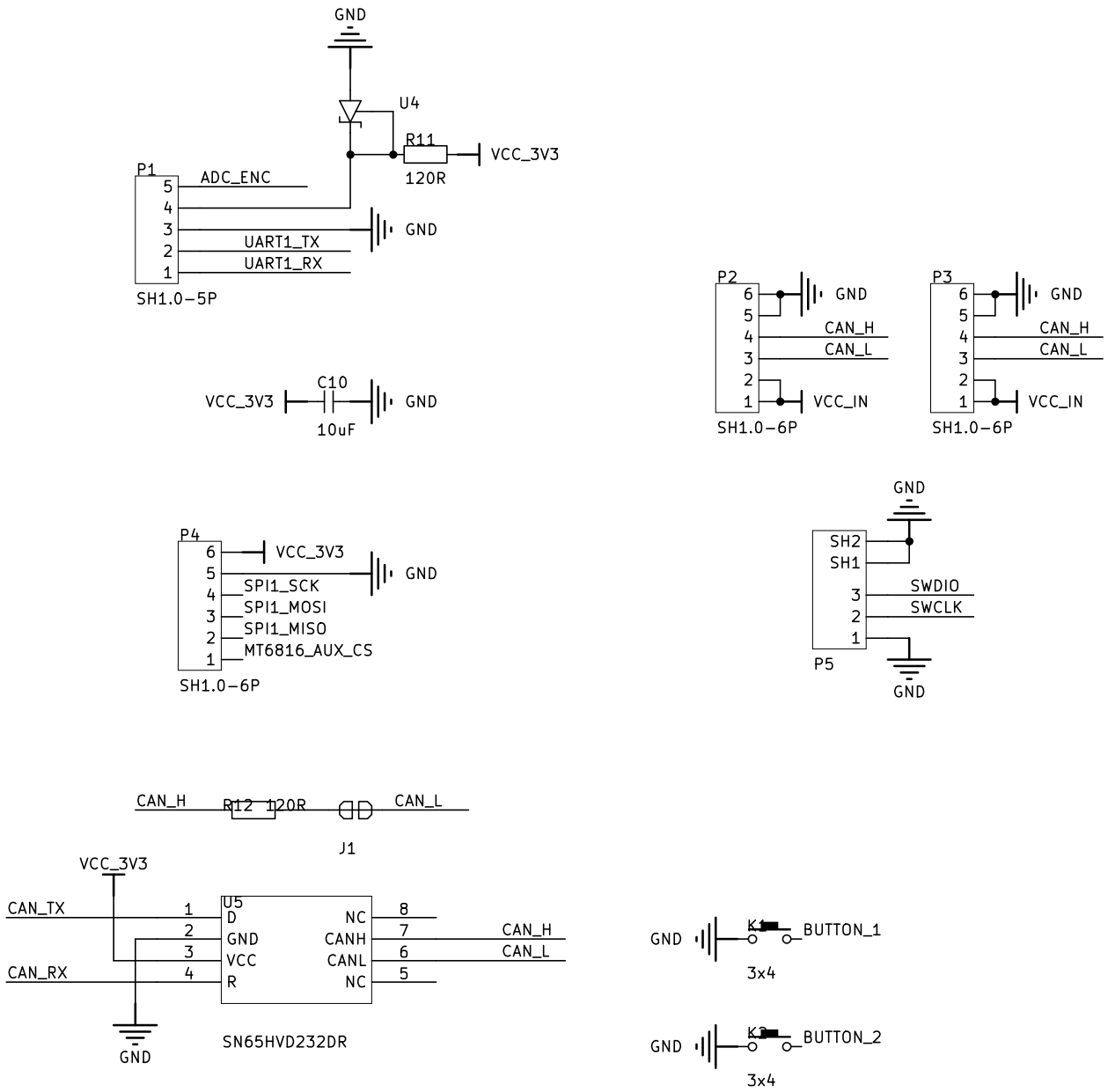
GND
U4
R11
120R
VCC_3V3
P1
ADC_ENC
GND
UART1_TX
UART1_RX
SH1.0-5P
VCC_3V3
C10
10uF
GND
P2
GND
CAN_H
CAN_L
VCC_IN
SH1.0-6P
P3
GND
CAN_H
CAN_L
VCC_IN
SH1.0-6P
P4
VCC_3V3
GND
SPI1_SCK
SPI1_MOSI
SPI1_MISO
MT6816_AUX_CS
SH1.0-6P
GND
SH2
SH1
SWDIO
SWCLK
P5
GND
CAN_H
R12 120R
CAN_L
J1
VCC_3V3
CAN_TX
CAN_RX
U5
D
GND
VCC
R
NC
CANH
CANL
NC
CAN_H
CAN_L
GND
SN65HVD232DR
GND
K1
BUTTON_1
3x4
GND
K2
BUTTON_2
3x4

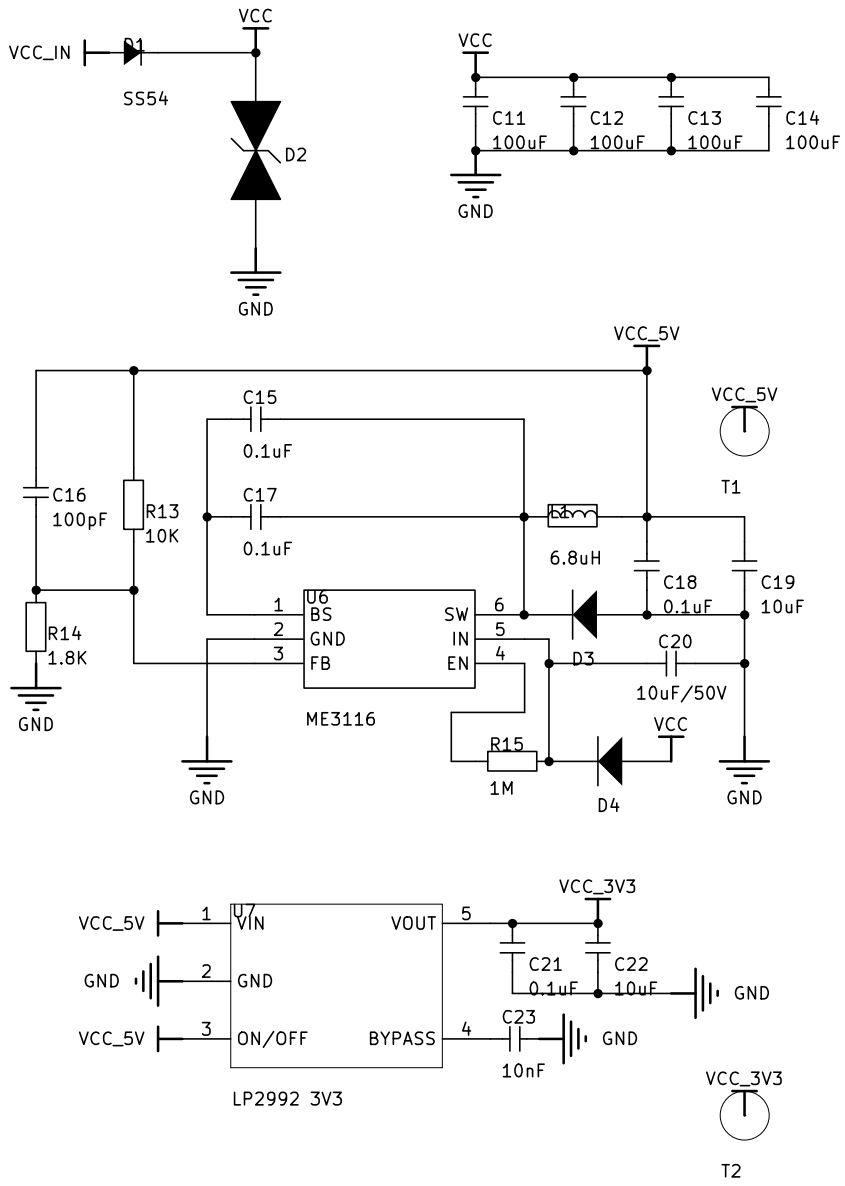
VCC_IN
D1
SS54
VCC
D2
GND
VCC
C11
100uF
C12
100uF
C13
100uF
C14
100uF
GND
VCC_5V
C15
0.1uF
C16
100pF
R13
10K
C17
0.1uF
L1
6.8uH
VCC_5V
T1
C18
0.1uF
C19
10uF
R14
1.8K
U6
BS
GND
FB
SW
IN
EN
D3
C20
10uF/50V
ME3116
VCC
R15
1M
D4
GND
GND
GND
VCC_5V
U7
VIN
VOUT
VCC_3V3
C21
0.1uF
C22
10uF
GND
GND
GND
VCC_5V
ON/OFF
BYPASS
C23
10nF
GND
LP2992 3V3
VCC_3V3
T2