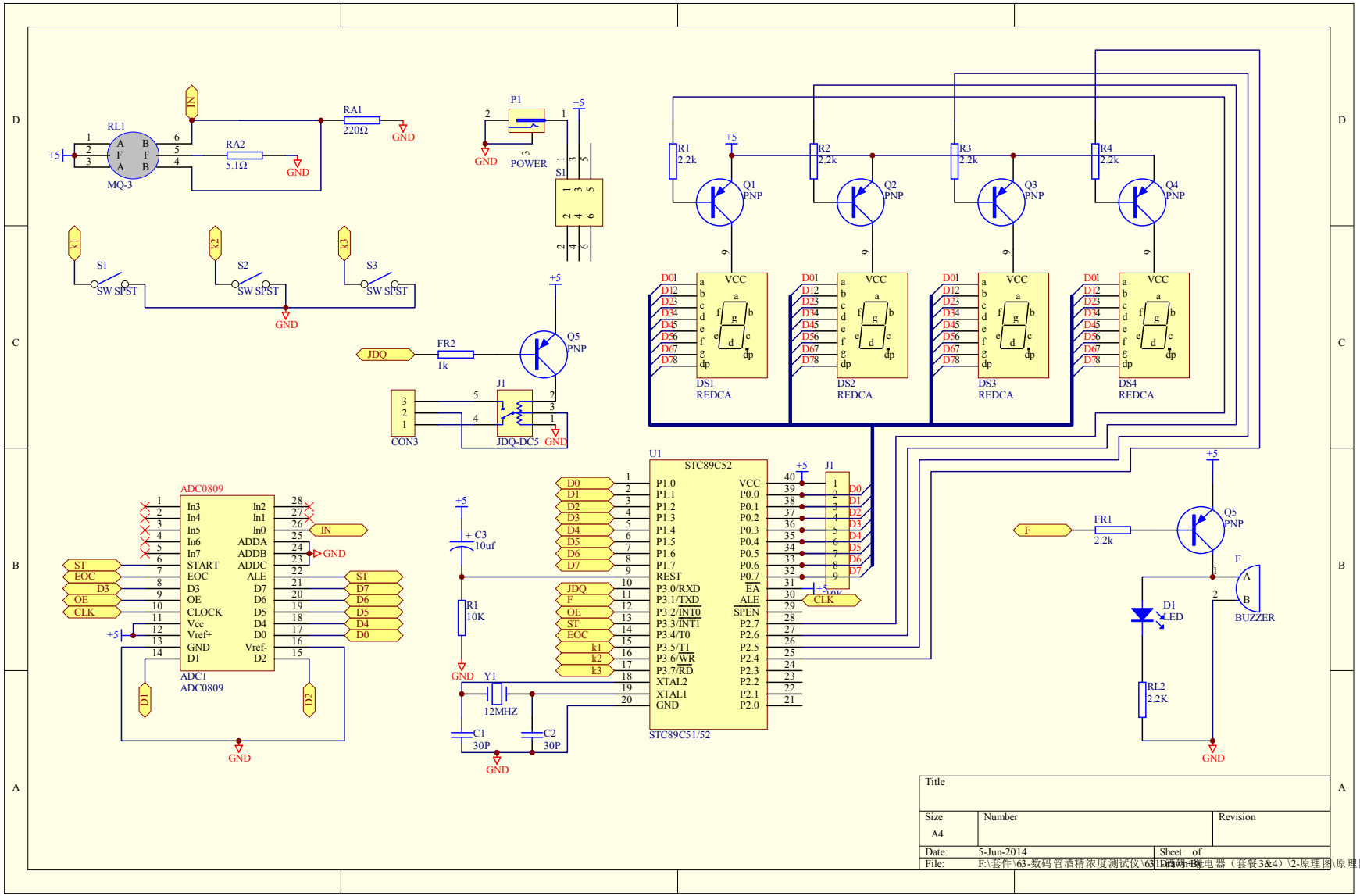

Print to PDF without this message by purchasing novaPDF (http://www.novapdf.com/)