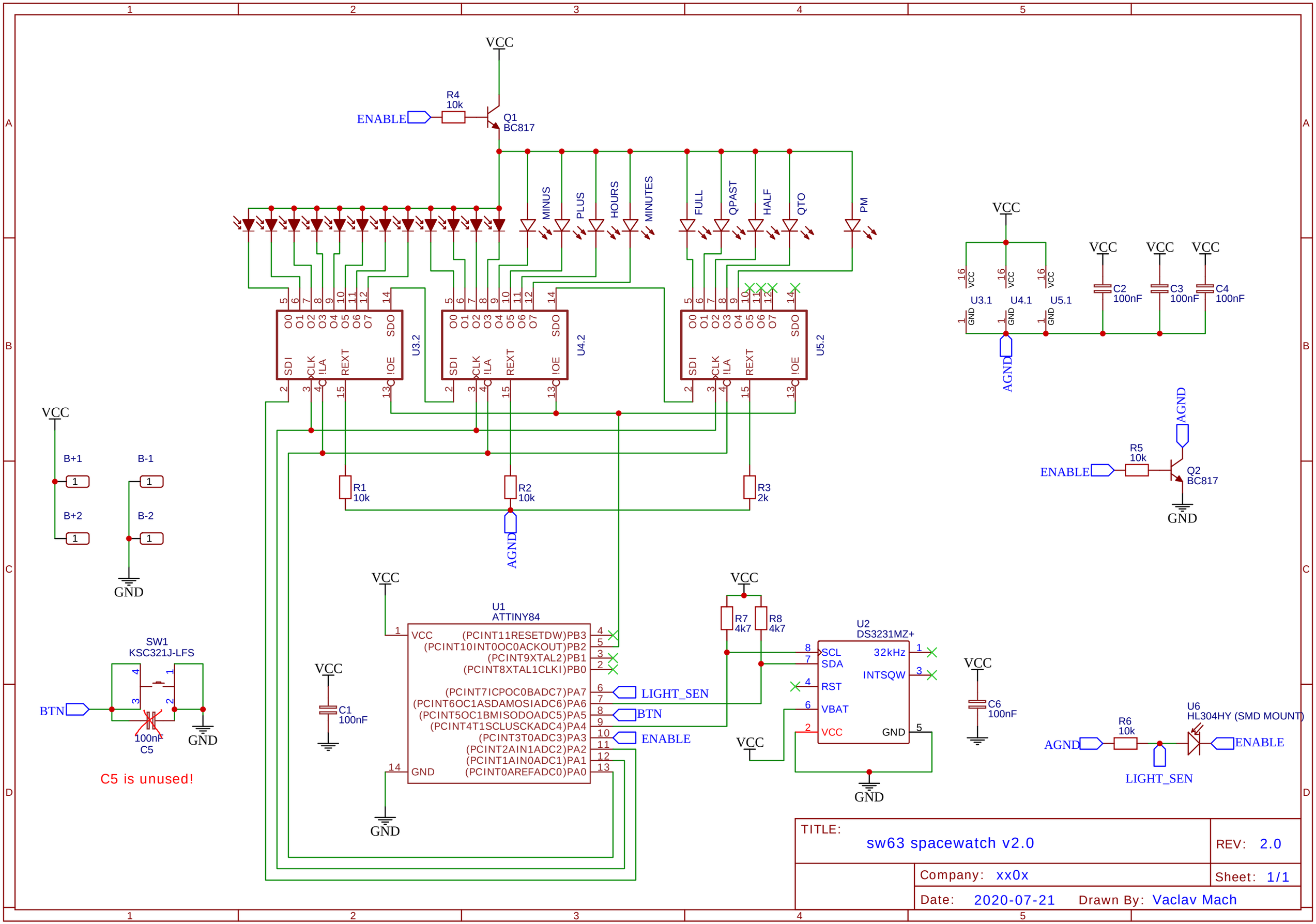
VCC
ENABLE
R4
10k
Q1
BC817
MINUS
PLUS
HOURS
MINUTES
FULL
QPAST
HALF
QTO
PM
U3.2
U4.2
U5.2
SDI
CLK
!LA
REXT
!OE
SDO
R1
10k
R2
10k
R3
2k
AGND
B+1
B-1
B+2
B-2
GND
SW1
KSC321J-LFS
BTN
100nF
C5
C5 is unused!
U1
ATTINY84
VCC
(PCINT11RESETDW)PB3
(PCINT10INT0OC0ACKOUT)PB2
(PCINT9XTAL2)PB1
(PCINT8XTAL1CLKI)PB0
(PCINT7ICPOC0BADC7)PA7
(PCINT6OC1ASDAMOSIADC6)PA6
(PCINT5OC1BMISODOADC5)PA5
(PCINT4T1SCLUSCKADC4)PA4
(PCINT3T0ADC3)PA3
(PCINT2AIN1ADC2)PA2
(PCINT1AIN0ADC1)PA1
(PCINT0AREFADC0)PA0
GND
LIGHT_SEN
BTN
ENABLE
C1
100nF
R7
4k7
R8
4k7
U2
DS3231MZ+
SCL
SDA
RST
VBAT
VCC
32kHz
INTSQW
GND
C6
100nF
U3.1
U4.1
U5.1
C2
100nF
C3
100nF
C4
100nF
R5
10k
Q2
BC817
R6
10k
U6
HL304HY (SMD MOUNT)
LIGHT_SEN
TITLE:
sw63 spacewatch v2.0
REV: 2.0
Company: xx0x
Sheet: 1/1
Date: 2020-07-21
Drawn By: Vaclav Mach