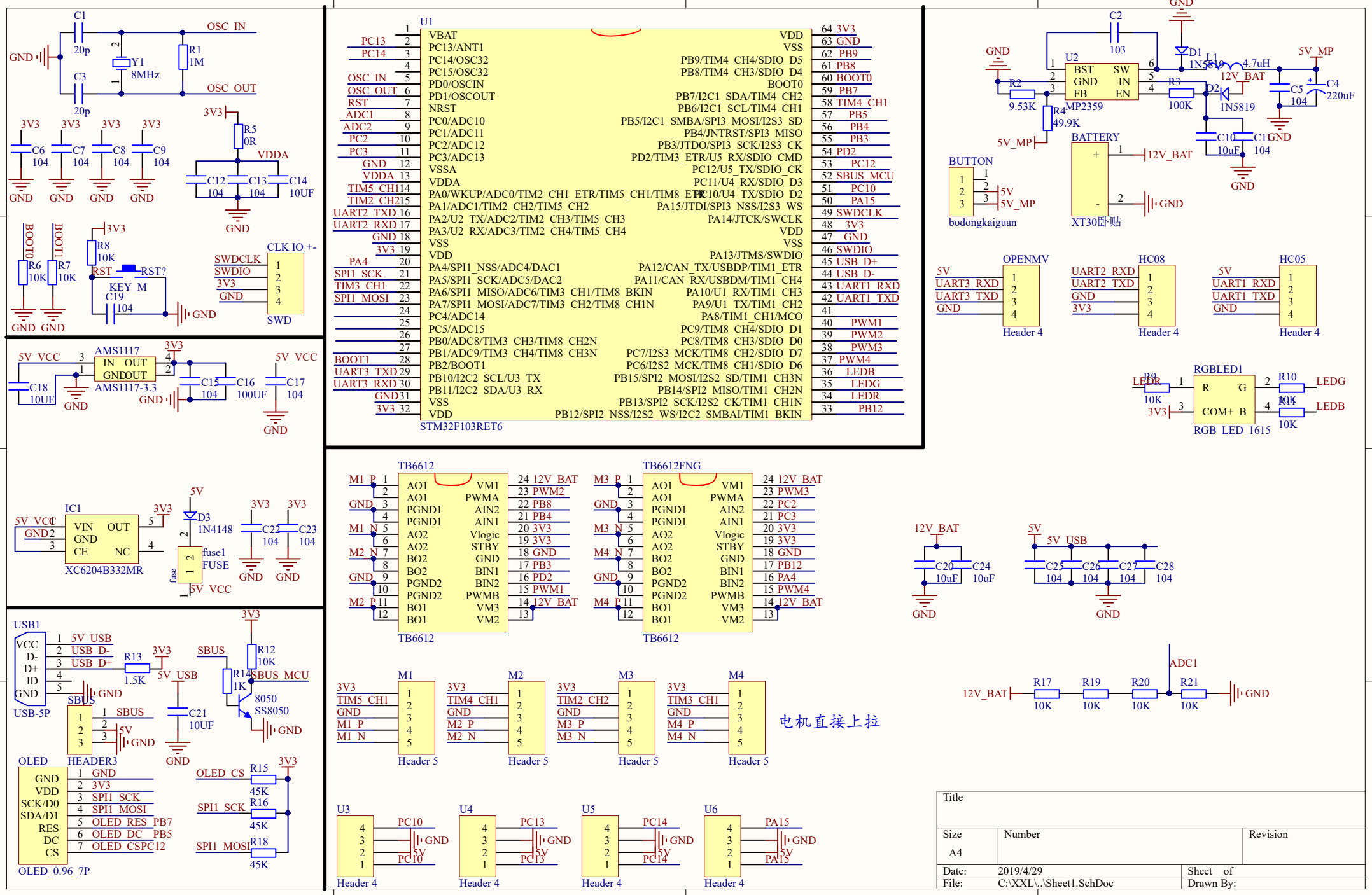
U1
STM32F103RET6
VBAT
PC13/ANT1
PC14/OSC32
PC15/OSC32
PD0/OSCIN
PD1/OSCOUT
NRST
PC0/ADC10
PC1/ADC11
PC2/ADC12
PC3/ADC13
VSSA
VDDA
PA0/WKUP/ADC0/TIM2_CH1_ETR/TIM5_CH1/TIM8_ETR
PA1/ADC1/TIM2_CH2/TIM5_CH2
PA2/U2_TX/ADC2/TIM2_CH3/TIM5_CH3
PA3/U2_RX/ADC3/TIM2_CH4/TIM5_CH4
VSS
VDD
PA4/SPI1_NSS/ADC4/DAC1
PA5/SPI1_SCK/ADC5/DAC2
PA6/SPI1_MISO/ADC6/TIM3_CH1/TIM8_BKIN
PA7/SPI1_MOSI/ADC7/TIM3_CH2/TIM8_CH1N
PC4/ADC14
PC5/ADC15
PB0/ADC8/TIM3_CH3/TIM8_CH2N
PB1/ADC9/TIM3_CH4/TIM8_CH3N
PB2/BOOT1
PB10/I2C2_SCL/U3_TX
PB11/I2C2_SDA/U3_RX
VSS
VDD
VDD
VSS
PB9/TIM4_CH4/SDIO_D5
PB8/TIM4_CH3/SDIO_D4
BOOT0
PB7/I2C1_SDA/TIM4_CH2
PB6/I2C1_SCL/TIM4_CH1
PB5/I2C1_SMBA/SPI3_MOSI/I2S3_SD
PB4/JNTRST/SPI3_MISO
PB3/JTDO/SPI3_SCK/I2S3_CK
PD2/TIM3_ETR/U5_RX/SDIO_CMD
PC12/U5_TX/SDIO_CK
PC11/U4_RX/SDIO_D3
PC10/U4_TX/SDIO_D2
PA15/JTDI/SPI3_NSS/I2S3_WS
PA14/JTCK/SWCLK
VDD
VSS
PA13/JTMS/SWDIO
PA12/CAN_TX/USBDP/TIM1_ETR
PA11/CAN_RX/USBDM/TIM1_CH4
PA10/U1_RX/TIM1_CH3
PA9/U1_TX/TIM1_CH2
PA8/TIM1_CH1/MCO
PC9/TIM8_CH4/SDIO_D1
PC8/TIM8_CH3/SDIO_D0
PC7/I2S3_MCK/TIM8_CH2/SDIO_D7
PC6/I2S2_MCK/TIM8_CH1/SDIO_D6
PB15/SPI2_MOSI/I2S2_SD/TIM1_CH3N
PB14/SPI2_MISO/TIM1_CH2N
PB13/SPI2_SCK/I2S2_CK/TIM1_CH1N
PB12/SPI2_NSS/I2S2_WS/I2C2_SMBAI/TIM1_BKIN
OSC_IN
OSC_OUT
RST
ADC1
ADC2
PC2
PC3
GND
VDDA
TIM5_CH1
TIM2_CH2
UART2_TXD
UART2_RXD
BOOT1
UART3_TXD
UART3_RXD
PA4
SPI1_SCK
TIM3_CH1
SPI1_MOSI
3V3
GND
VDD
PC13
PC14
PA15
PB12
PB11
PB10
PB9
PB8
BOOT0
PB7
TIM4_CH1
PB5
PB4
PB3
PD2
PC12
SBUS_MCU
PC10
PA15
SWDCLK
SWDIO
USB_D+
USB_D-
UART1_RXD
UART1_TXD
PWM1
PWM2
PWM3
PWM4
LEDB
LEDG
LEDR
C1
20p
C3
20p
Y1
8MHz
R1
1M
OSC_IN
OSC_OUT
GND
3V3
C6
104
C7
104
C8
104
C9
104
R5
0R
VDDA
C12
104
C13
104
C14
10UF
R6
10K
R7
10K
R8
10K
RST
RST?
KEY_M
C19
104
CLK IO +-
SWDCLK
SWDIO
SWD
5V_VCC
AMS1117
IN
OUT
GND
AMS1117-3.3
C18
10UF
C15
104
C16
100UF
C17
104
IC1
VIN
OUT
GND
CE
NC
XC6204B332MR
D3
1N4148
fuse1
FUSE
5V_VCC
C22
104
C23
104
USB1
VCC
D-
D+
ID
GND
USB-5P
5V_USB
USB_D-
USB_D+
R13
1.5K
SBUS
R12
10K
R14
1K
SBUS_MCU
8050
SS8050
C21
10UF
HEADER3
OLED
GND
VDD
SCK/D0
SDA/D1
RES
DC
CS
OLED_0.96_7P
OLED_CS
SPI1_SCK
SPI1_MOSI
R15
45K
R16
45K
R18
45K
TB6612
TB6612FNG
M1_P
M1_N
M2_P
M2_N
M3_P
M3_N
M4_P
M4_N
AO1
PGND1
AO2
BO2
PGND2
BO1
VM1
PWMA
AIN2
AIN1
Vlogic
STBY
BIN1
BIN2
PWMB
VM3
VM2
12V_BAT
PWM2
PWM3
PWM4
M1
M2
M3
M4
Header 5
电机直接上拉
U3
U4
U5
U6
Header 4
PC10
PC13
PC14
PA15
C2
103
U2
BST
SW
GND
IN
FB
EN
MP2359
D1
1N5819
L1
4.7uH
12V_BAT
5V_MP
R2
9.53K
R4
49.9K
R3
100K
D2
1N5819
C5
104
C4
220uF
C10
10uF
C11
104
BATTERY
XT30卧贴
BUTTON
bodongkaiguan
5V
OPENMV
UART3_RXD
UART3_TXD
Header 4
HC08
UART2_RXD
UART2_TXD
HC05
UART1_RXD
UART1_TXD
RGBLED1
RGB_LED_1615
R9
10K
R10
10K
LEDG
LEDB
C20
10uF
C24
10uF
5V_USB
C25
104
C26
104
C27
104
C28
104
ADC1
R17
10K
R19
10K
R20
10K
R21
10K
Title
Size
A4
Number
Revision
Date:
2019/4/29
File:
C:\XXL\..\Sheet1.SchDoc
Sheet of
Drawn By: