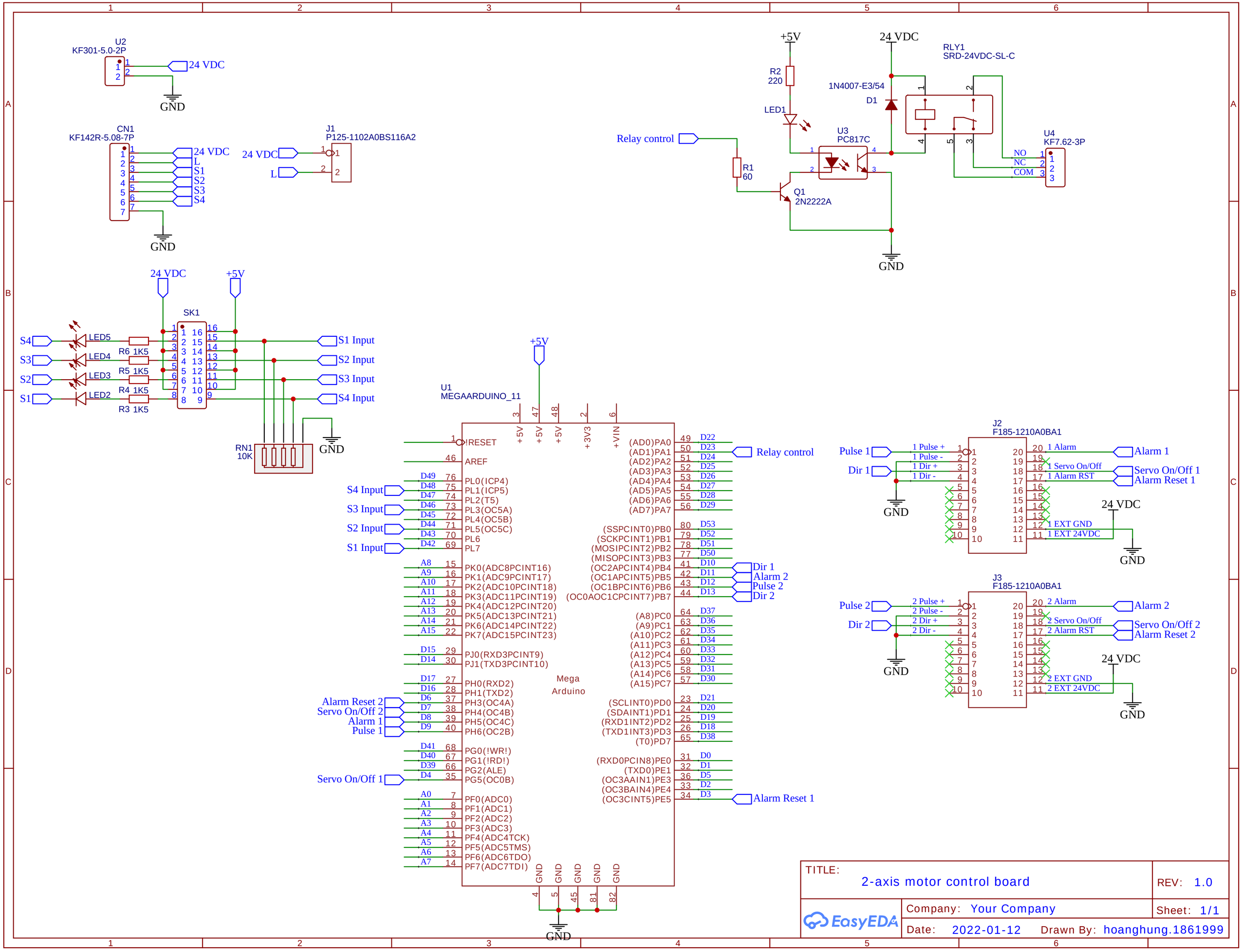
U2
KF301-5.0-2P
24 VDC
GND
CN1
KF142R-5.08-7P
24 VDC
L
S1
S2
S3
S4
GND
J1
P125-1102A0BS116A2
24 VDC
L
+5V
R2
220
LED1
24 VDC
1N4007-E3/54
D1
RLY1
SRD-24VDC-SL-C
Relay control
R1
60
U3
PC817C
Q1
2N2222A
GND
U4
KF7.62-3P
NO
NC
COM
24 VDC
+5V
SK1
S4
S3
S2
S1
LED5
LED4
LED3
LED2
R6 1K5
R5 1K5
R4 1K5
R3 1K5
S1 Input
S2 Input
S3 Input
S4 Input
RN1
10K
GND
+5V
U1
MEGAARDUINO_11
!RESET
AREF
PL0(ICP4)
PL1(ICP5)
PL2(T5)
PL3(OC5A)
PL4(OC5B)
PL5(OC5C)
PL6
PL7
PK0(ADC8PCINT16)
PK1(ADC9PCINT17)
PK2(ADC10PCINT18)
PK3(ADC11PCINT19)
PK4(ADC12PCINT20)
PK5(ADC13PCINT21)
PK6(ADC14PCINT22)
PK7(ADC15PCINT23)
PJ0(RXD3PCINT9)
PJ1(TXD3PCINT10)
PH0(RXD2)
PH1(TXD2)
PH3(OC4A)
PH4(OC4B)
PH5(OC4C)
PH6(OC2B)
PG0(!WR!)
PG1(!RD!)
PG2(ALE)
PG5(OC0B)
PF0(ADC0)
PF1(ADC1)
PF2(ADC2)
PF3(ADC3)
PF4(ADC4TCK)
PF5(ADC5TMS)
PF6(ADC6TDO)
PF7(ADC7TDI)
Mega
Arduino
(AD0)PA0
(AD1)PA1
(AD2)PA2
(AD3)PA3
(AD4)PA4
(AD5)PA5
(AD6)PA6
(AD7)PA7
(SSPCINT0)PB0
(SCKPCINT1)PB1
(MOSIPCINT2)PB2
(MISOPCINT3)PB3
(OC2APCINT4)PB4
(OC1APCINT5)PB5
(OC1BPCINT6)PB6
(OC0AOC1CPCINT7)PB7
(A8)PC0
(A9)PC1
(A10)PC2
(A11)PC3
(A12)PC4
(A13)PC5
(A14)PC6
(A15)PC7
(SCLINT0)PD0
(SDAINT1)PD1
(RXD1INT2)PD2
(TXD1INT3)PD3
(T0)PD7
(RXD0PCIN8)PE0
(TXD0)PE1
(OC3AAIN1)PE3
(OC3BAIN4)PE4
(OC3CINT5)PE5
+5V
+5V
+5V
+3V3
+VIN
GND
GND
GND
GND
GND
S4 Input
S3 Input
S2 Input
S1 Input
Alarm Reset 2
Servo On/Off 2
Alarm 1
Pulse 1
Servo On/Off 1
Relay control
Dir 1
Alarm 2
Pulse 2
Dir 2
Alarm Reset 1
J2
F185-1210A0BA1
Pulse 1
Dir 1
1 Pulse +
1 Pulse -
1 Dir +
1 Dir -
1 Alarm
1 Servo On/Off
1 Alarm RST
1 EXT GND
1 EXT 24VDC
Alarm 1
Servo On/Off 1
Alarm Reset 1
24 VDC
GND
J3
F185-1210A0BA1
Pulse 2
Dir 2
2 Pulse +
2 Pulse -
2 Dir +
2 Dir -
2 Alarm
2 Servo On/Off
2 Alarm RST
2 EXT GND
2 EXT 24VDC
Alarm 2
Servo On/Off 2
Alarm Reset 2
24 VDC
GND
TITLE:
2-axis motor control board
REV: 1.0
Company: Your Company
Sheet: 1/1
Date: 2022-01-12
Drawn By: hoanghung.1861999
EasyEDA