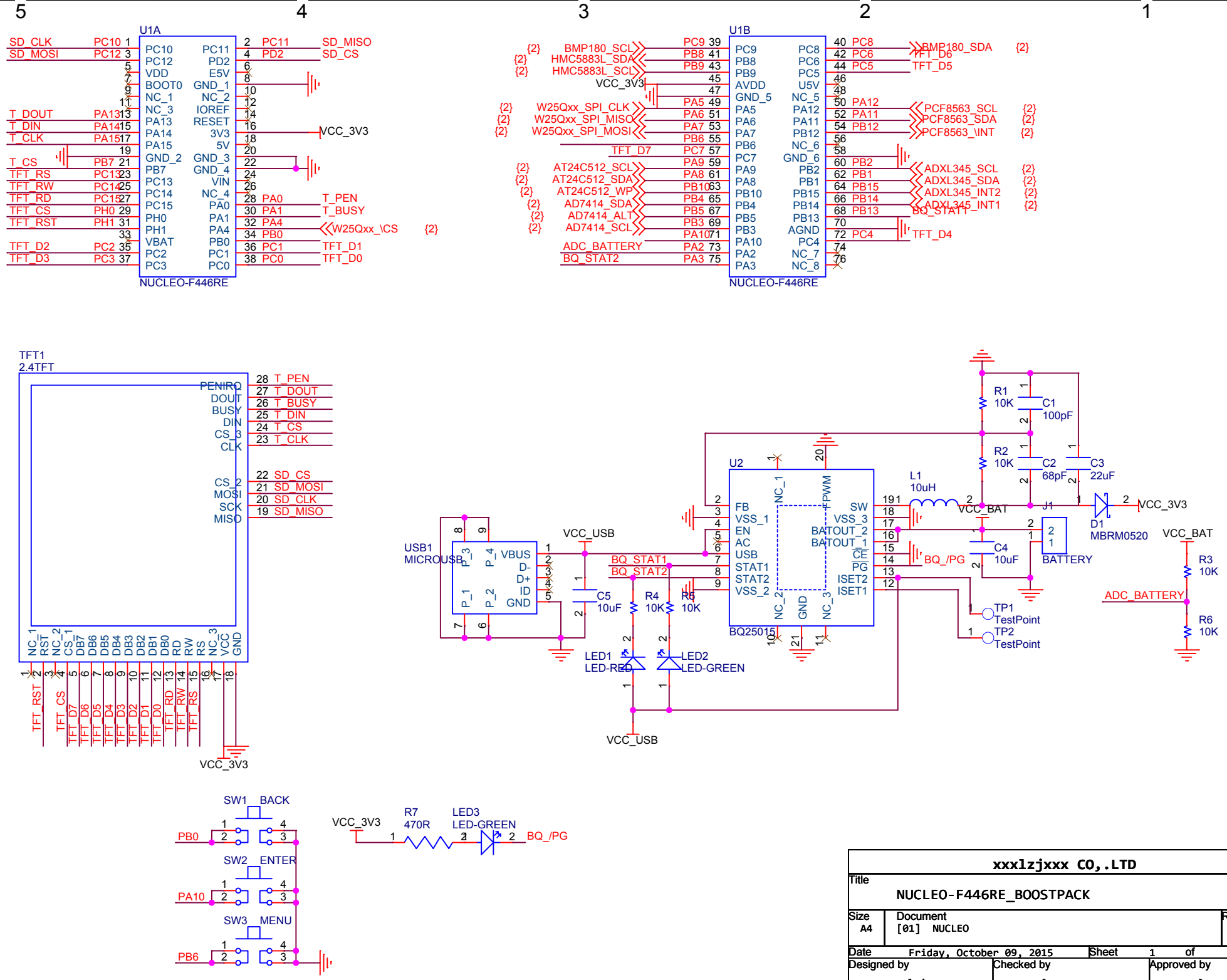

xxxlzjxxx CO,.LTD	
Title	NUCLEO-F446RE_BOOSTPACK
Size A4	Document [01] NUCLEO
Rev	V1A
Date	Friday, October 09, 2015
Sheet	1 of 2
Designed by	xxxlzjxxx
Checked by	?
Approved by	?

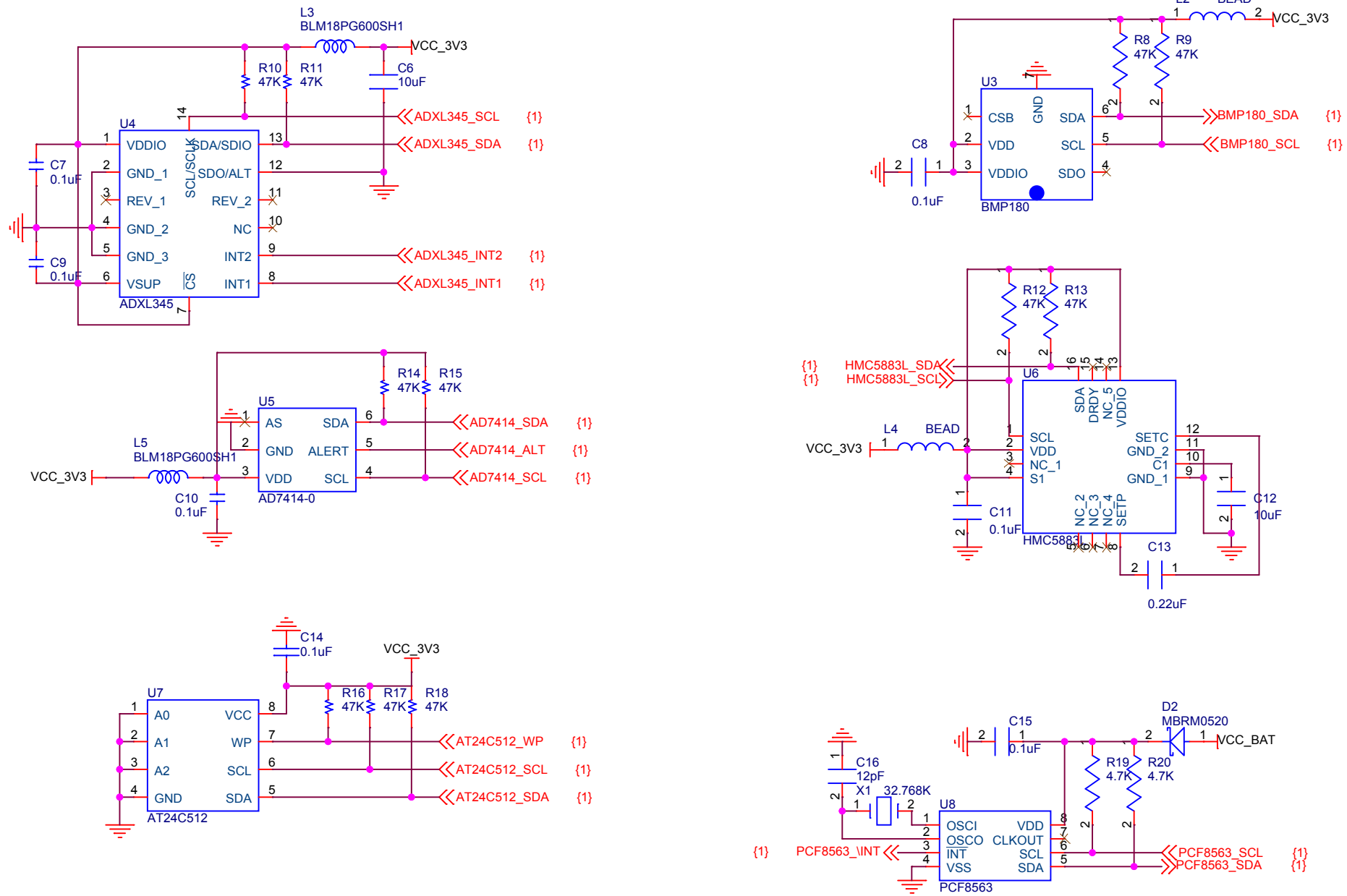

xxxlzjxxx CO,.LTD			
Title	NUCLEO-F446RE_BOOSTPACK		
Size A4	Document [02] MODULAR		Rev V1A
Date Friday, October 09, 2015		Sheet 2 of 2	
Designed by xxxlzjxxx	Checked by ?	Approved by ?	