NORTH SOUTH UNIVERSITY
DEPARTMENT OF ELECTRICAL & COMPUTER ENGINEERING

Term Project Report

Spring 2021

EEE211: Digital Logic Design
Section: 02

Submission By: Group 06

Name	ID
Anan Faiyaz Radin	1931714643
Mahatab Bin Zahid	1722360043

Title of the Project:

Sequential Display of Characters using 2x 7-Segment Displays

Objectives:

-To see AP-77-55 in two 7-Segment displays

-Practically Implementing Combinational & Sequential Circuits to display a valid output

-Displaying Characters using 7-Bit Logic Design

Application:

The application of seven segments can mostly be observed in showing the outputs for all kinds of digital appliances like - calculators, meters, clocks, odometers, clocks, clock radios and many more.

Today most of the 7 segment applications are using LCDs, because of low current consumption.

Working Procedure:

The required output is:

AP – 77 - 55

We divide the circuitry required for each 7- Segment Displays to simplify our work process. And so, first display will cover “A-7-5” and second one will cover “P-7-5”.

Firstly, we use the documentation provided for a standard 7- Segment Display to sequentially arrange the input lines.

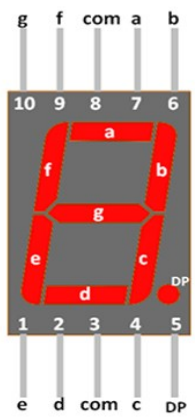

After which, we test out the respective combinations of input for **a, b, c, d, e, f** and **g**, for which we receive the following characters “A, 7, 5” and “P, 7, 5”

We can then observe that we have 3 states per circuit which we have to cycle per clock pulse. So, we use 2-bits (A & B) to assign states to the 3 combinations per circuit including a null state.

CHAR	A	B		a	b	c	d	e	f	g
	0	0		0	0	0	0	0	0	0
A	0	1		1	1	1	0	1	1	1
7	1	0		1	1	1	0	0	0	0
5	1	1		1	0	1	1	0	1	1
CHAR	A	B		a	b	c	d	e	f	g
	0	0		0	0	0	0	0	0	0
P	0	1		1	1	0	0	1	1	1
7	1	0		1	1	1	0	0	0	0
5	1	1		1	0	1	1	0	1	1

This functions as a makeshift 2 to 7 Decoder.

Next, we derive the individual Boolean expression for each of the pins of the 7-Segment displays (a, b, c, d, e, f, g) for the respective combinations.

First 7S Display		**Second 7S Display**	
Output	Boolean Expression	Output	Boolean Expression
a	B + A	a	B + A
b	~A B + A ~B	b	~A B + A ~B
c	B + A	c	A
d	A B	d	A B
e	~A B	e	~A B
f	B	f	B
g	B	g	B

Now that we have both our combinational circuitry to display the outputs, we move on to the timing segment. As we are required to display 2 Characters per clock pulse, we are to cycle through the states in each circuit simultaneously.

For this reason, we now construct a simple Sequential Circuit using T-Flipflops controlled by a rising Clock Signal. T- Flipflops are simple memory devices that can easily toggle states, and so it can be conveniently used here.

The output for our Sequential Circuit must match to the state assignments (A & B) in our combinational circuit. Using this information, we build a sequential circuit using 2 T Flipflops that cycles through the states 00, 01, 10 and 11 respectively with each clock pulse.

This can also be said to be functioning as a 2-Bit Counter that counts from 0 to 3.

Lastly, we construct the obtained Boolean Expressions for each of the pinouts (**a, b, c, d, e, f, g**) of the 7 Segment Displays with basic gates in Logisim, creating 2 separate circuits for each display. We connect the input lines A & B for both circuits together.

We then construct the sequential circuit (2-bit counter) using 2 T Flipflops, connecting the enable pins and the clock pulse to the respective pins.

Finally, we connect the output of the first flipflop to B (most significant bit) and the second output to A (least significant bit); linking our combinational and sequential circuit together.

We now observe the output and results by enabling the clock and simulation.

Image of Logisim Circuit:

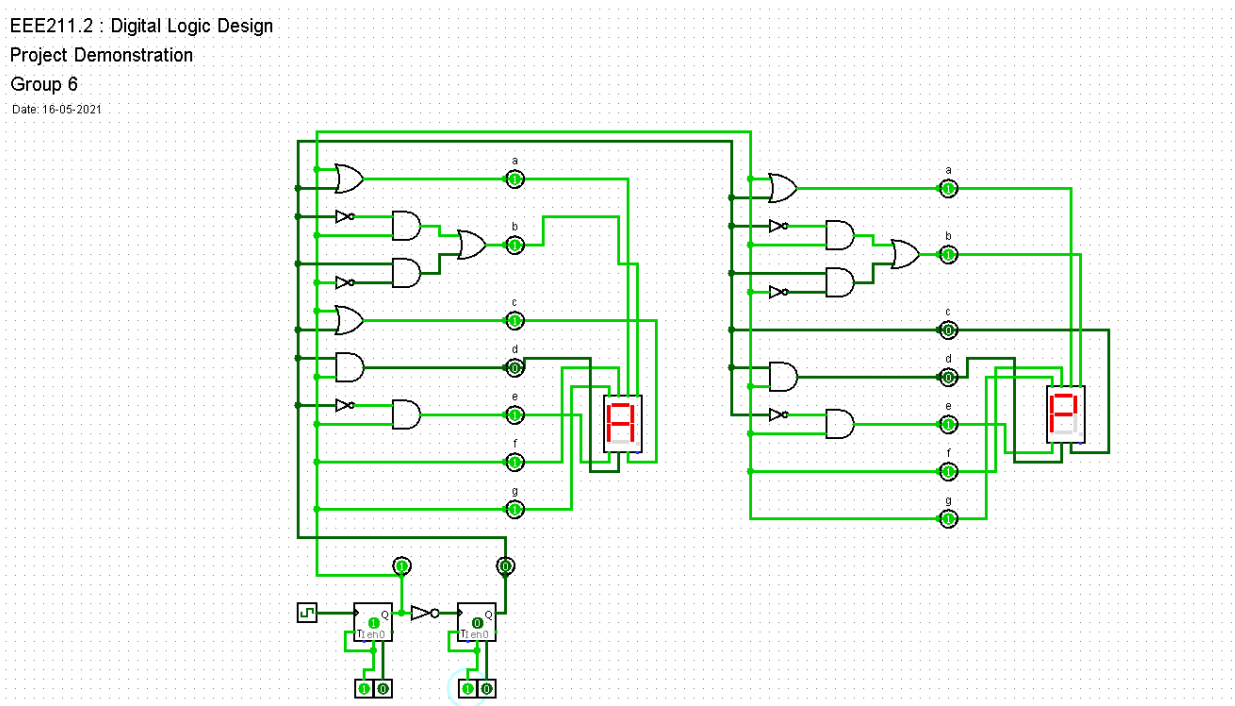

Figure: Displaying AP-77-55 on 2-7 Segment Displays using Combinational & Sequential Circuit

EEE211.2 : Digital Logic Design

Project Demonstration

Group 6

Date: 16-05-2021

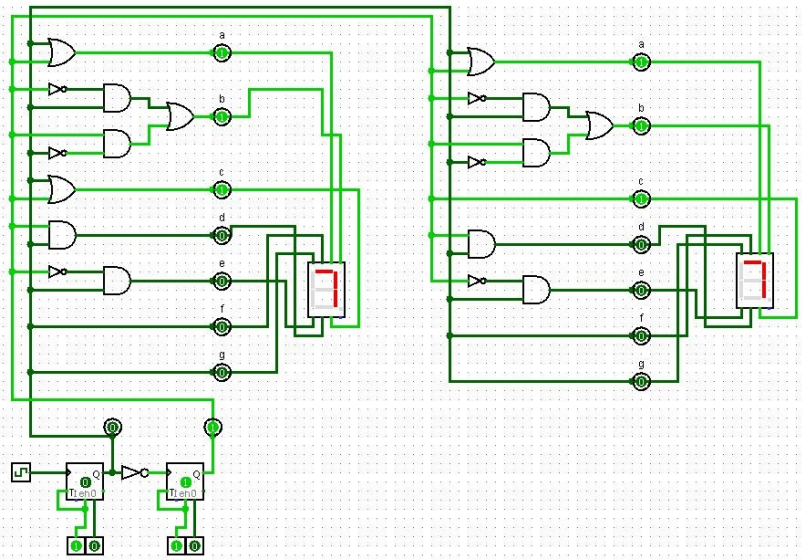

Figure: Displaying AP-77-55 on 2-7 Segment Displays using Combinational & Sequential Circuit

EEE211.2 : Digital Logic Design

Project Demonstration

Group 6

Date: 16-05-2021

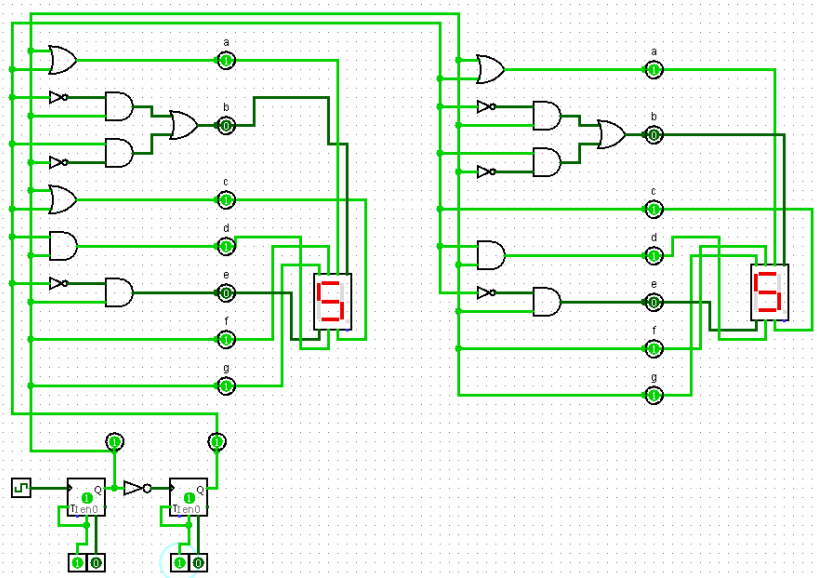

Figure: Displaying AP-77-55 on 2-7 Segment Displays using Combinational & Sequential Circuit

Discussion:

In this project we faced a few problems. For instance, the output in the display wasn't displaying properly. We then found out that it was a wrong connection of display in the main circuit. This was debugged by rechecking the Boolean expressions and reconstructing the circuit properly.

Upon a more detailed purview, we can also conclude that the same output can be achieved with different or varying circuitry; however, we have taken a step-by-step process here and simplified our workflow to easily achieve our desired output.

This was a good experience for the whole group as it taught us the practical implementation of both combinational and sequential circuits together and how they might be actually used in the real world outside of the theoretical realm.