# SMART CAR PARKING SYSTEM


| Anan Faiyaz Radin | Kazi Ejaj Hossain | Maher Niger Abila | Ashraf Uddin Opu |
|---|---|---|---|
| Dept. of Electrical & Computer Engineering | Dept. of Electrical & Computer Engineering | Dept. of Electrical & Computer Engineering | Dept. of Electrical & Computer Engineering |
| North south University | North south University | North south University | North south University |
| Dhaka, Bangladesh | Dhaka, Bangladesh | Dhaka, Bangladesh | Dhaka, Bangladesh |
| anan.radin@northsouth.edu | kazi.hossain03@northsouth.edu | maher.abila@northsouth.edu | ashraf.opu@northsouth.edu |



**Abstract: A lot of work has been done on a nearby smart parking system even more smart systems where research has been done and is still being done to create a system which is not only technically intelligent but also comfortable. Of this project the goal is to create a system that helps people, including private vehicles, find parking easily on selected area. This system includes both software and hardware.**



**Keywords: vehicles, software, hardware, parking.**


## *I.INTRODUCTION*

With the help of Smart Car Parking System drivers can easily see the real time parking status which would specify the presence of a vehicle parked in the specific spot. The primary vision of developing smart cities to enable growing technologies in to our daily activities which helps us to resolve our dail1y issues in health care management, traffic management system. Increasing a number of vehicles and the cities overcrowd, finding a free space has become a major issue to the drivers. Though many traditional approaches and technologies are deployed there have been many flaws are suspected and identified. Though lot of solutions has been proposed over the parking solution problems they have certain limitation and constraints over the device or technology used as well as the cost factor required for implementation. So considering such factors smart car parking is a prototype model to experiment our system which can very effectively optimize the parking solution with low cost parking solutions.

## *II. LITERATURE SURVEY*

### A. Smart Parking Systems

According to the previous related work, for the development of the system many different methods are used. It is very essential to know the development of this system to ensure a good improvement in this project. In some case, image procedure is given more importance instead of sensor-based systems. The driver's number plate is captured by image procedure, users can easily identify the number plate and the information is stored in the database.

The smart car parking system were mainly implemented in Europe, USA and Japan. But later on, the other countries have started developing and they also started to install this car parking system for the betterment of their countries. With more progress in the system of car parking is that finding vacant spaces easily and all the hassles of finding vacancies going to be deprived.

### B. Advantages of Smart Parking Systems

- Travelers are optimizing of their parking.
- Save time and increased safety.
- Reducing time and pollution.

- Improving the parking area and distributing the flow very well.
- Decreasing driver's frustration.
- Decreasing the traffic problem.
- Profit-making and beneficial.
- Reducing management costs.
- Real time data and trend insight.
- Reduction of procession.

### *III. METHODOLOGY*

Methodology is a model which explains the methods of the project's design, develop or plan. The software and hardware have to be also explained for the development of this project. Further results are being analyzed to achieve the objectives of this project. The sensors review different types of literature and the method that smart parking is being used the system was done. And finally, an application interface was implemented based on various comparative studies sensor.

**A. System Overview**

**1.Simulation**

We bought 6 ultra-sonic sensor and 2 servo-motor. 2 sensor and motor is using for entry and exit and remaining 4 sensor are used for parking slot. When a car is entering the parking slot, entry sensor gets triggered and the servo-motor-1 gets open and the slot from the screen will decrease. When a car leaves the parking-lot, exit sensor will get triggered and servo-motor-2 will open and slot will increase. Inside the parking lot, there are 4 sensors. When a car will trigger one of those sensors, it'll show to display, where the parking occupied and vice-versa.

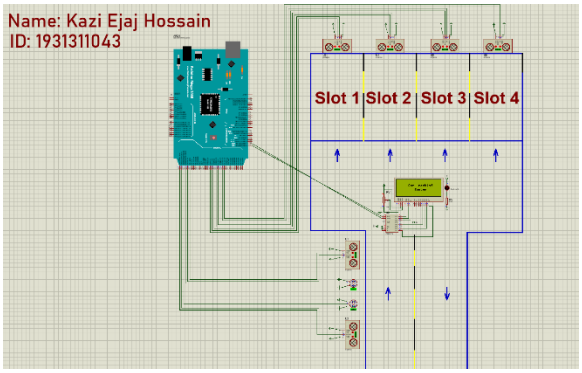


**2. Flowchart**

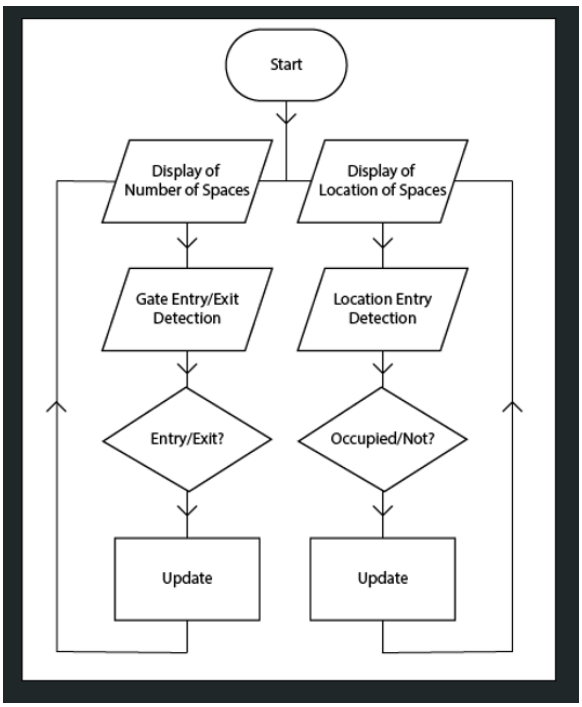


**3. CODING**

MarkX | Arduino 1.8.19

File Edit Sketch Tools Help

MarkX

```
#include <Servo.h>
#include <Wire.h>
#include <LiquidCrystal_I2C.h>

LiquidCrystal_I2C lcd = LiquidCrystal_I2C(0x27, 20, 4); // SDA: Arduino 20, SCL: Arduino 21.

Servo gate1,gate2;

float f=0.6;
int close_gate=60, open_gate=270,s,i;
const int t[] = {30,32,22,24,26,28};                //Defining all Sonar Trigger Pins
const int e[] = {31,33,23,25,27,29};                //Defining all Sonar Echo Pins
long D[6];
long data[6];
long dur,dis;

boolean entry_state=false;
boolean exit_state=false;
boolean slot1_state=false;
boolean slot2_state=false;
boolean slot3_state=false;
boolean slot4_state=false;

long Entry=19*f;
long Exit=19*f;
long slot=9*f;
//unsigned long myTime;
int pass_time=1000;

void setup()
        {
          Serial.begin(9600);
          lcd.init();
          lcd.backlight();
          lcd.clear();
          gate1.attach(6);
          gate2.attach(7);

          for (int i=0; i<6; i++)
                                {
```

MarkX | Arduino 1.8.19

File Edit Sketch Tools Help

MarkX

```
          for (int i=0; i<6; i++)
                                {
                                  pinMode(t[i], OUTPUT);
                                  pinMode(e[i], INPUT);
                                }

        }

void loop()
        {
          //lcd.clear();
          lcd.setCursor(2, 0);
          lcd.print("SMART CAR PARKING");

          for (int i=0; i<6; i++)
                                {
                                  data[i]=readSonar(i);
                                  Serial.print(data[i]);

                                  Serial.print("    cm          ");
                                }
          Serial.println();
          Serial.println();

          exit_state=state(0,Exit);
          Serial.print("Exit State:  ");
          Serial.print(exit_state);

          entry_state=state(1,Entry);
          Serial.print("    Entry State:  ");
          Serial.print(entry_state);

          slot1_state=state(2,slot);
          Serial.print("    S1 State:  ");
          Serial.print(slot1_state);

          slot2_state=state(3,slot);
          Serial.print("    S2 State:  ");
          Serial.print(slot2_state);
```

MarkX | Arduino 1.8.19

File Edit Sketch Tools Help

MarkX

```
          slot3_state=state(4,slot);
          Serial.print("    S3 State:  ");
          Serial.print(slot3_state);

          slot4_state=state(5,slot);
          Serial.print("    S4 State:  ");
          Serial.println(slot4_state);

          s=4-(slot1_state+slot2_state+slot3_state+slot4_state);

          if (slot1_state==1) {lcd.setCursor(0, 1);lcd.print("S1:FULL ");}
     else if (slot1_state==0) {lcd.setCursor(0, 1);lcd.print("S1:EMPTY");}
          if (slot2_state==1) {lcd.setCursor(10,1);lcd.print("S2:FULL ");}
     else if (slot2_state==0) {lcd.setCursor(10,1);lcd.print("S2:EMPTY");}
          if (slot3_state==1) {lcd.setCursor(0,2); lcd.print("S3:FULL ");}
     else if (slot3_state==0) {lcd.setCursor(0,2); lcd.print("S3:EMPTY");}
          if (slot4_state==1) {lcd.setCursor(10,2);lcd.print("S4:FULL ");}
     else if (slot4_state==0) {lcd.setCursor(10,2);lcd.print("S4:EMPTY");}

          if (entry_state==1 || exit_state==1)
                                                {  //open gates
                                                 if(entry_state==1){gate1.write(30);delay(pa
                                                 if(exit_state==1)  {gate2.write(50);delay(pa
                                                }

     else if(entry_state==0 || exit_state==0)
                                                {   //close gates
                                                if(entry_state==0){gate1.write(120);delay(pa
                                                if(exit_state==0)  {gate2.write(140);delay(pa
                                                }

          lcd.setCursor(1,3);
          lcd.print("Remaining Slots: ");
          lcd.print(s);
          lcd.print(" ");


        }

int readSonar(int i)
```

MarkX | Arduino 1.8.19

File Edit Sketch Tools Help

MarkX

```
          if (entry_state==1 || exit_state==1)
                                                {  //open gates
                                                 if(entry_state==1){gate1.write(30);delay(pa
                                                 if(exit_state==1)  {gate2.write(50);delay(pa
                                                }

     else if(entry_state==0 || exit_state==0)
                                                {   //close gates
                                                if(entry_state==0){gate1.write(120);delay(pa
                                                if(exit_state==0)  {gate2.write(140);delay(pa
                                                }

          lcd.setCursor(1,3);
          lcd.print("Remaining Slots: ");
          lcd.print(s);
          lcd.print(" ");


        }

int readSonar(int i)
                    {
                      digitalWrite(t[i],LOW);
                      delayMicroseconds(2);
                      digitalWrite(t[i],HIGH);
                      delayMicroseconds(10);
                      digitalWrite(t[i],LOW);

                      dur=pulseIn(e[i],HIGH);
                      dis=((0.034*dur)/2);
                      return dis;
                    }

int state(int i,int j)
                      {
                        boolean state;
                        if(data[i]<=j)  {state=true;}
                        else if (data[i]>=j) {state=false;}
                        return state;
                      }
```

## IV. RESULT

The aim of this project is to study various topics of sensors used in smart parking systems and a same comparative study, as how different the sensor works under different conditions.

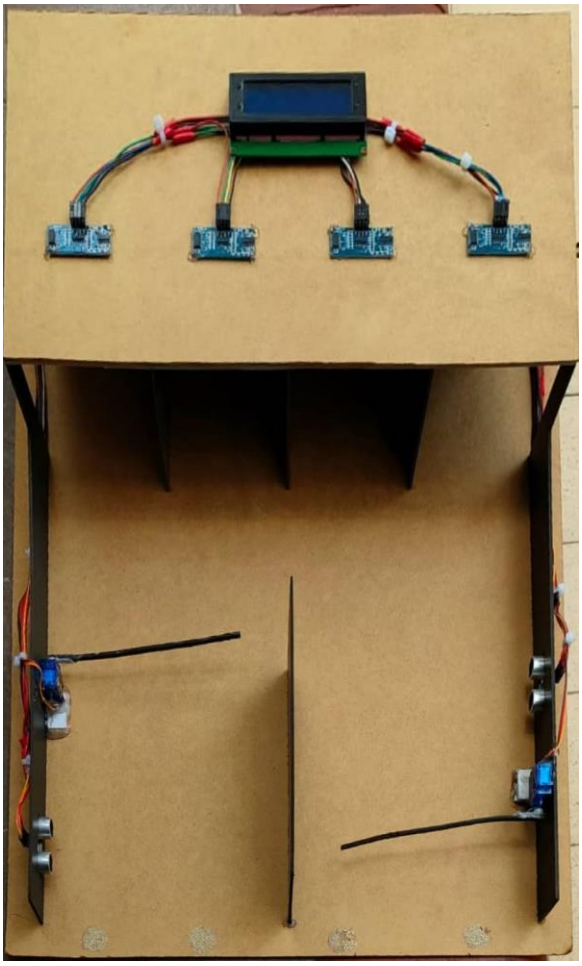

## *V. CONCLUSION*

With the advancement and increasing of technology number of cars on the road, smart parking system has become essential for us. Numbers of more vehicles, and places to adjust or park vehicles are low, which leads to many problems. So, it is very important to implement these properly and fix issues like driver frustration, difficult parking experience etc. So, this literature survey focusses on different types of sensors used in the market for smart parking systems and a comparative study of how they affect this system works under different conditions need, as they affect the work and skill of smart parking system. The system can be further enhanced by providing routes to select the parking locations easily.

## *VI. ACTKNOWLEDGEMENT*

We are grateful to our project guide Dr. Nafisa Noor, Assistant Professor, Department of Electrical and Computer Engineering for her valuable guidance and suggestions in all aspects that aided us to increase our skills. We are also thankful to the anonymous referees for their valuable inputs and feedback. We extend our sincere thanks to my loveable group mates. They are very supportive and helpful.

## *REFERENCES*

1. M. Computing, “Smart Car Parking Using Arduino,” vol. 5, no. 2, pp. 230–234, 2016.
2. T. N. A. M. Pham, M. Tsai, and D. U. C. B. Nguyen, “A Cloud-Based Smart-Parking System Based on Internet-of-Things Technologies,” pp. 1581–1591, 2015.
3. S. A. El-seoud, H. El-sofany, and I. Taj-eddine, “Towards the Development of Smart Parking System using Arduino and Web Technologies,” no. 978, pp. 10–16, 2016.
4. R. H. Giva Andriana, Anak Agung, “Sensor Comparation for Smart Parking System,” pp. 4–9, 2012
5. M. N. M. Yasin and S. K. Khamas, "Measurements and Analysis of a Probe-Fed Circularly Polarized Loop Antenna Printed on a Layered Dielectric Sphere," in IEEE Transactions on

Antennas and Propagation, vol. 60, no. 4, pp. 2096-2100, April 2012.

6. Wireless based Smart Parking System using Zigbee by HamzahAsyrani Bin Sulaiman et.al / International Journal of Engineering and Technology (IJET)
7. James Karki, “Signal Conditioning Piezoelectric Sensors”, Texas Instruments, Application Report: SLOA033A – September 2000
8. Rockwell Automation, “Ultrasonic Sensing”, www.ab.com/en/epub/catalogs/12772/6543185/12041221/12041229/Ultrasonic-Advantages-andDisadvantages.html
9. “How to build a (Peizo) Knock Sensor Circuit”, http://www.learningaboutelectronics.com/Articles/Piezo -knock-sensor-circuit.php