North South University
Department of Electrical & Computer Engineering
Microprocessor Interfacing & Embedded Systems

Project Report

Heartbeat Monitor using 8051/PIC Microcontroller

Submitted By

Anan Faiyaz Radin – 1931714643

Murshida Talukdar Shouvra – 2022346643

Md. Rayhan Kabir Khan - 1921669043

Supervisor Faculty - SKH1

Lab Instructor - Azmary Zannat Aurin

Spring 2023

Abstract

Modern world is advancing with technological innovation utilizing autometric circuitries in every field possible and so, the field of disease prevention and maintenance of patient health is also getting technologized particularly in monitoring systems. Heart rate is an essential aspect of human health, closely linked to the cardiovascular system. It serves as a physiological indicator of an individual's heart rate, reflecting their mental and physical state. Typically, a healthy adult's resting heart rate is approximately 72 beats per minute (bpm). This project report describes a PIC microcontroller-based heartbeat measuring device with an LCD display. This project aims to assess and track the heartbeat, providing valuable insights into one's overall well-being.

Keywords:PIC, Microcontroller, pulse, LCD, sensor

Introduction

The human heart is the most critical organ of the human body. Its condition can determine life & death. This has prompted numerous research projects into non-invasive methods of measuring & determining the current state of functioning of the heart.

Two clear indicators for the condition of the human heart is the Oxygen Saturation (SpO2) given by a percentage & the Beat Rate of the Heart which is given in Beats per Minute.

We design a system, that can read PPG (Photoplethysmography) with the help of a Sensor (IR Diode & Receiver), passes the raw signal through a LC Filter & Simple Amplifier to eliminate noise, read the signal through the ADC in the PIC Microcontroller, process it accordingly to count the beats (Signal Peaks) in the Controller & Display obtained results in a LCD Display through I2C.

The whole system can be visualized using the following flowchart developed using lucid app.

Methodology:

> Explore Theory (Observation)
> Ideate the System
> Simulate
> Develop Code
> Identify Components & Specifications
> Assemble the Hardware
> Run & Debug
> Results - Compare with Reference (Pulse Oximeter)
> Conclusion

Theory

The most popular non-invasive method of measuring heart rate is known as PPG. A photoplethysmogram (PPG) is an optically obtained plethysmogram that can be used to detect blood volume changes in the microvascular bed of tissue.

With each cardiac cycle the heart pumps blood to the periphery. Even though this pressure pulse is somewhat damped by the time it reaches the skin, it is enough to distend the arteries and arterioles in the subcutaneous tissue. If the pulse oximeter is attached without compressing the skin, a pressure pulse can also be seen from the venous plexus, as a small secondary peak.

The change in volume caused by the pressure pulse is detected by illuminating the skin with the light from a light-emitting diode (LED) and then measuring the amount of light either transmitted or reflected to a photodiode. Each cardiac cycle appears as a peak.

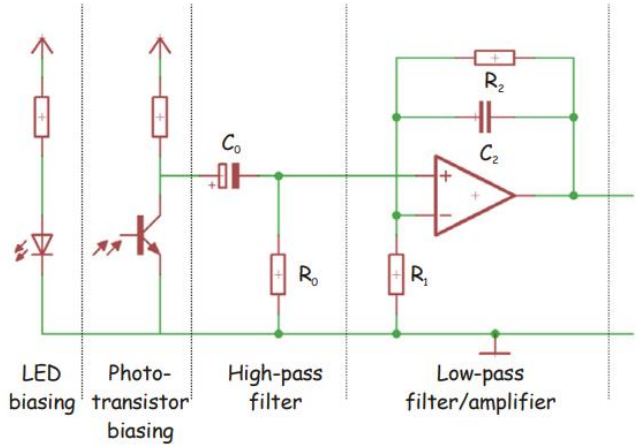

We utilize the Grove Ear-Clip that is basically a simplified sensor module that achieves the above stated input stage in a simple manner. The module has 3 terminals, namely - Supply(+5V), Ground (Gnd) & Signal. The signal terminal outputs a continuous pulse signal that peaks everytime a heartbeat is detected. The signal processing algorithm & usage is picked up from the Grove-Seeedstudio Datasheet “PPG Sensor System”.

For our microcontroller, we will primarily require a single ADC Channel, a I2C Serial Communication Channel, and capable of operating at mid range & above frequencies as we will need to take the sensor reading every 2 ms.

For this reason, we will be using the PIC16F877A, a commonly available MicroChip Device that can serve all our requirements. Detailed specifications can be found on the manufacturer datasheet.

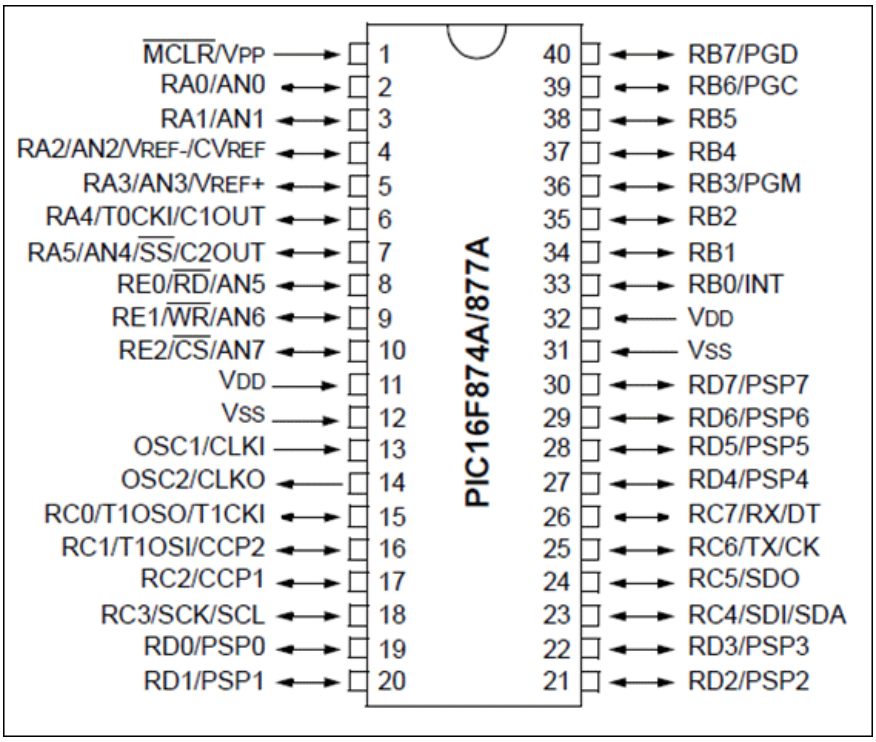

It has 8 ADC Channels, has I2C channels & can operate upto 20Mhz. Which serves our requirements.

After the input signal is received, we feed it through pin 10 of our MC, which is the 8th ADC Channel. The ADC provides us with a value between 0 to 1023 depending on signal strength.
The ADC is set up & run by 3 Registers, ADCON0 , ADCON1 & Go_nDONE. The first 2 registers help configure the chip enable, Greg selection, channel mode and selection. The 3rd register is a flag register that indicates whether the ADC has finished conversion.

ADCON0 REGISTER (ADDRESS 1Fh)

R/W-0	R/W-0	R/W-0	R/W-0	R/W-0	R/W-0	U-0	R/W-0
ADCS1	ADCS0	CHS2	CHS1	CHS0	GO/$\overline{\text{DONE}}$	—	ADON
bit 7							bit 0

ADCON1 REGISTER (ADDRESS 9Fh)

R/W-0	R/W-0	U-0	U-0	R/W-0	R/W-0	R/W-0	R/W-0
ADFM	ADCS2	—	—	PCFG3	PCFG2	PCFG1	PCFG0
bit 7							bit 0

We Set ADCON0 = 0x80 and set ADCON1 = 0x05 for our particular use case.

Then we listen to the ADC channel until the 3rd register is Reset. Detailed usage parameters are provided in the PIC data sheet.

After reading the ADC, we compute the BPM by using a simple peak detection algorithm. A threshold is set, and whenever the real time signal crosses the threshold, it sets a Boolean flag.

We utilize the inbuilt 8 bit timer “tmr0” in pic16f877a to read the ADC every 2 ms by triggering an interrupt & keeping a running time of the system. The tmr0 is configured by enabling certain bits and configurations in 3 Registers of the PIC Microcontroller. Namely,

Register	Description
OPTION_REG	This registers is used to configure the TIMER0 Prescalar, Clock Source etc
TMR0	This register will hold the count value.When this register overflows (FF to 00) then an interrupt will be generated.
INTCON	This register contains the Timer0 overflow flag(TMR0IF) and corresponding Interrupt Enable flag(TMR0IE).

The time between two peaks are recorded in an array variable. 10 Such readings are then averaged to obtain a reliable BPM Reading.

Finally, we initialize the I2C Driver to display our obtained readings to a 20x4 LCD. The PCF8574 is an 8 Bit I/O Expander that enables us to run the 16 Pin 20x4 LCD with only 2 pins from the PIC Controller- SCL & SDA.

In this case, our PIC16F877A is the master and the PCf8574 is the slave device. The slave address for the device is 0x4E. The usage parameters are defined in the datasheet.

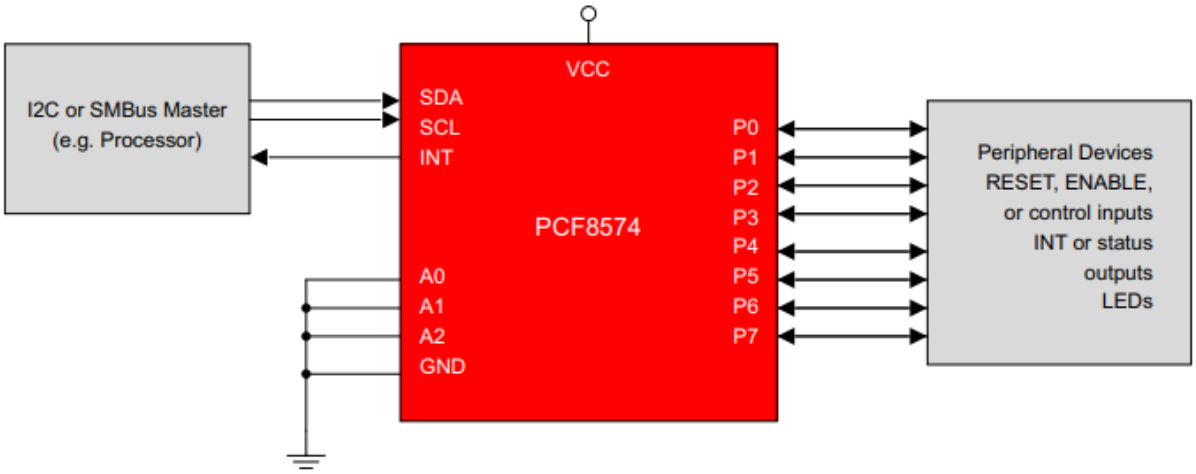

We modify a widely used library file 'I2C_LCD' available for PIC Controllers to work with a 20x4 Display instead of 16x2. The LCD is run in a 4 Bit, 2 Line Mode.

The initialization & most commands are compiled in the header file and are highlighted in the code segment. After initialization, we can now display the required data on the display

The program then loops continuously to either continuously read the heart signal when attached to the patient or sit in idle if no signal is found for some continuous time of 1500 ms.

Simulation:

We simulate the proposed system in Proteus Circuit Simulator to identify the required components & component specifications as well as develop the required algorithm/ code for our Microcontroller.

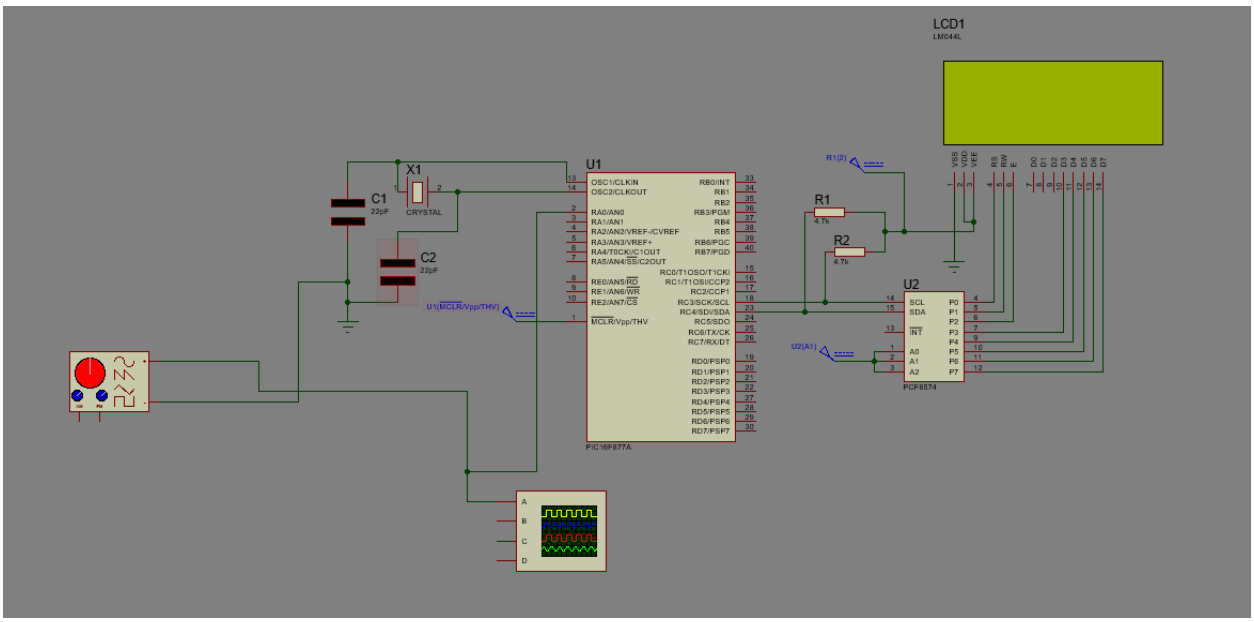

SEN-11574 Heart Rate Sensor Module was the only proteus component available for measurement. However, after testing, it was found that though it provided accurate oscilloscope output waveforms in the simulation, it could not provide a valid input to the ADC of the PIC16F877A during runtime.

For simplicity & ease of development, a VSM Signal Generator is used instead of pulse sensor to generate a continuous Sine wave to simulate a steady heart rate. The frequency can also be varied to sample a changing heart rate.

A 20 Mhz Clock is set by connecting a 20MHZ Crystal with 2x 22pf Coupling Capacitors to ground. The PCF8574 is connected to the SCL & SDA pins (PIN 18 & 23). The remaining connections are made as per datasheet.

The data & write pins of the LCD 20x4 are connected to the 8 Data lines of the PCF8574 (D0~D7).

We then configure the code to obtain the required output as shown below:

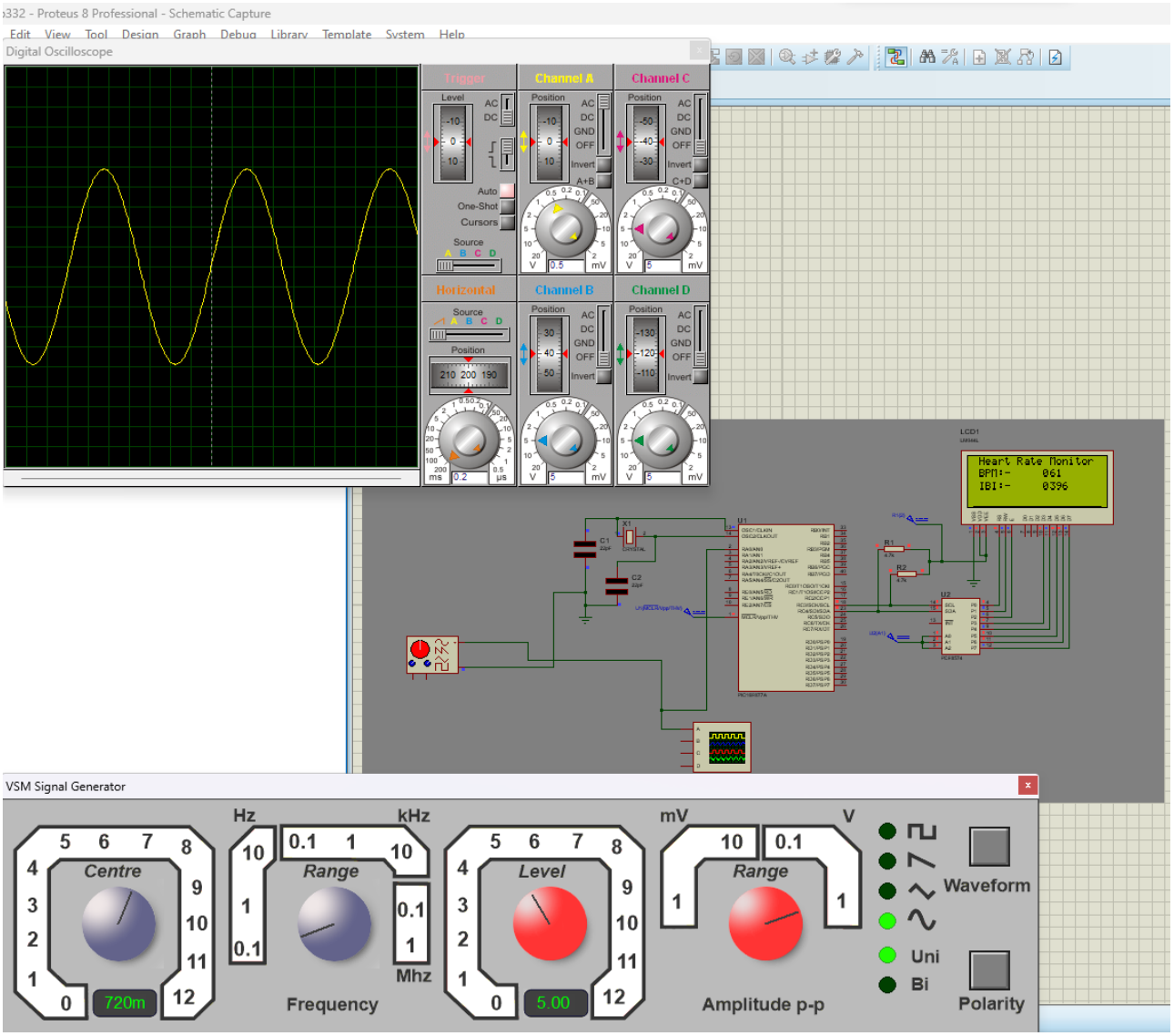

It is to be noted that the simulation does not represent real world functioning as there is more noise in real world signal processing.

Hardware List:

1. **Power Supply-** 12 V AC-DC Adapter + Power Supply Module
2. **Programmer -** PIC KIT 3 Programmer/ Debugger
3. **Development Board -** Simple PIC Breakout Board
4. **MicroController -** PIC16F877A
5. **Sensor -** Grove Ear-Clip Heart Rate Sensor
6. **Display -** LM044L 20x4 LCD Display
7. **I2C Driver -** PC5874 8 Bit I/O Expander
8. **Connectors -** Male/Female Connectors
9. **Miscellaneous -** Soldering Equipment, Oscilloscope, Tape etc.

Assembly:

We connect the hardware as simulated and program our PIC Micro-controller using the PIC Kit 3.

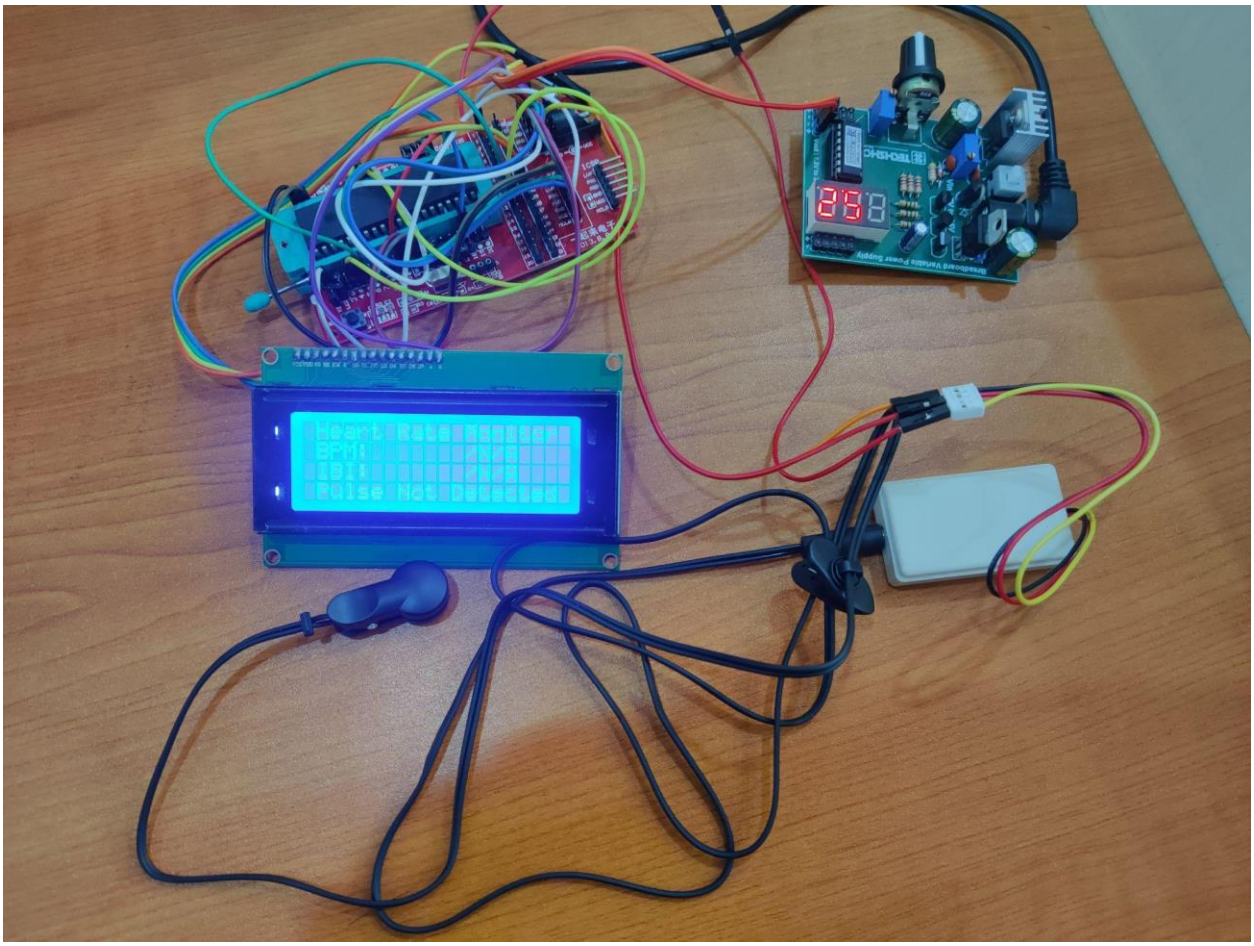

Figure: *Hardware Assembly*

Code

“main.c”

```
/*
 * File:   main.c
 * Author: Anan Faiyaz
 * Created on June 3, 2023, 2:28 PM
 */
#pragma config FOSC = HS        // Oscillator Selection bits (HS oscillator)
#pragma config WDTE = OFF       // Watchdog Timer Enable bit (WDT disabled)
#pragma config PWRTE = ON       // Power-up Timer Enable bit (PWRT enabled)
#pragma config BOREN = ON       // Brown-out Reset Enable bit (BOR enabled)
#pragma config LVP = OFF        // Low-Voltage (Single-Supply) In-Circuit Serial Programming Enable bit (RB3 is digital I/O, HV on MCLR must be
used for programming)
#pragma config CPD = OFF        // Data EEPROM Memory Code Protection bit (Data EEPROM code protection off)
#pragma config WRT = OFF        // Flash Program Memory Write Enable bits (Write protection off; all program memory may be written to by
EECON control)
#pragma config CP = OFF
#pragma warning disable 520
#include <xc.h>
#include "I2C.h"
//#include "tmr0.h"
#include <stdlib.h>
#include <stdio.h>
#include <string.h>
#include <stdbool.h>
#define delay for(i=0;i<=1000;i++)
#define _XTAL_FREQ 20000000
#define INTERRUPT_GlobalInterruptEnable() (INTCONbits.GIE = 1)
#define INTERRUPT_GlobalInterruptDisable() (INTCONbits.GIE = 0)
#define INTERRUPT_PeripheralInterruptEnable() (INTCONbits.PEIE = 1)
#define INTERRUPT_PeripheralInterruptDisable() (INTCONbits.PEIE = 0)
/* Program Flow related definition*/
#define READ_ADC  1
#define CAL_HBEAT 2
#define SHO_HBEAT 3
#define IDLE 0
#define DEFAULT -1
volatile int state = -1;
//volatile unsigned long N = 0;
volatile int rate[10]; // array to hold last ten IBI values
volatile unsigned long sampleCounter = 0; // used to determine pulse timing
volatile unsigned long lastBeatTime = 0; // used to find IBI
volatile int P = 512; // used to find peak in pulse wave, seeded
volatile int T = 512; // used to find trough in pulse wave, seeded
volatile int thresh = 530; // used to find instant moment of heart beat, seeded
volatile int amp =0; // used to hold amplitude of pulse waveform, seeded
volatile bool firstBeat = true; // used to seed rate array so we startup with reasonable BPM
volatile bool secondBeat = false; // used to seed rate array so we startup with reasonable BPM
volatile int BPM; // int that holds raw Analog in AN4/RB5. updated every 2mS
volatile int Signal; // holds the incoming raw data
volatile int IBI = 600; // int that holds the time interval between beats! Must be seeded!
volatile bool Pulse = false; // "True" when User's live heartbeat is detected. "False" when not a "live beat".
volatile bool QS = false; // becomes true when finds a beat.
//Pre-Declaring Most Functions
void adc();
volatile int adcval=0;
void TMR0_Initialize(void);
void TMR0_StartTimer(void);
void TMR0_StopTimer(void);
void TMR0_ISR(void);
void timer_isr(void);
void __interrupt() INTERRUPT_InterruptManager (void);
const uint8_t tmr0_mask = 0xFF;

//Main Calculation Algorithm & Function
void calculate_heart_beat(int adcval) {
                Signal = adcval;
                sampleCounter += 2; // keep track of the time in mS with this variable
                int N = sampleCounter - lastBeatTime; // monitor the time since the last beat to avoid noise
                //  find the peak and trough of the pulse wave
                if (Signal < thresh && N > ((IBI / 5)*3)) { // avoid dichrotic noise by waiting 3/5 of last IBI
                                if (Signal < T) { // T is the trough
                                                T = Signal; // keep track of lowest point in pulse wave
                                                }
                                }
                if (Signal > thresh && Signal > P) { // thresh condition helps avoid noise
```

```
                                        P = Signal; // P is the peak
                                      } // keep track of highest point in pulse wave
                        //  NOW IT'S TIME TO LOOK FOR THE HEART BEAT
                        // signal surges up in value every time there is a pulse
                        if (N >250) { // avoid high frequency noise
                                if ((Signal > thresh) && (Pulse == false) && (N > (IBI / 5)*3)) {
                                                                Pulse = true; // set the Pulse flag when we think there is a pulse
                                                                IBI = (sampleCounter - lastBeatTime); // measure time between beats in
mS
                                                                lastBeatTime = sampleCounter; // keep track of time for next pulse
                                                                if (secondBeat) { // if this is the second beat, if secondBeat == TRUE
                                                                        secondBeat = false; // clear secondBeat flag
                                                                        int i;
                                                                        for (i = 0; i <= 9; i++) { // seed the running total to get a realisitic
BPM at startup
                                                                                        rate[i] = IBI;
                                                                                       }
                                                                        }
                                                                if (firstBeat) { // if it's the first time we found a beat, if firstBeat == TRUE
                                                                        firstBeat = false; // clear firstBeat flag
                                                                        secondBeat = true; // set the second beat flag
                                                                        //pulse_tmr_handle =
bsp_harmony_start_tmr_cb_periodic(PULSE_CHECK_TIME_INTERVAL, 0, pulse_read_cb); // enable interrupts again
                                                                        return; // IBI value is unreliable so discard it
                                                                      }
                                                                // keep a running total of the last 10 IBI values
                                                                uint16_t runningTotal = 0; // clear the runningTotal variable
                                                                int i;
                                                                for (i = 0; i <= 8; i++) { // shift data in the rate array
                                                                   rate[i] = rate[i + 1]; // and drop the oldest IBI value
                                                                   runningTotal += rate[i]; // add up the 9 oldest IBI values
                                                                }
                                                                rate[9] = IBI; // add the latest IBI to the rate array
                                                                runningTotal += rate[9]; // add the latest IBI to runningTotal
                                                                runningTotal /= 10; // average the last 10 IBI values
                                                                BPM = 60000 / runningTotal; // how many beats can fit into a minute?
that's BPM!
                                                                QS = true; // set Quantified Self flag
                                                                // QS FLAG IS NOT CLEARED INSIDE THIS ISR
                                                                }
                                }
                        if (Signal < thresh && Pulse == true) { // when the values are going down, the beat is over
                                                Pulse = false; // reset the Pulse flag so we can do it again
                                                amp = P - T; // get amplitude of the pulse wave
                                                thresh = amp / 2 + T; // set thresh at 50% of the amplitude
                                                P = thresh; // reset these for next time
                                                T = thresh;
                                              }
                        if (N > 2500) { // if 2.5 seconds go by without a beat
                                        thresh = 530; // set thresh default
                                        P = 512; // set P default
                                        T = 512; // set T default
                                        lastBeatTime = sampleCounter; // bring the lastBeatTime up to date
                                        firstBeat = true; // set these to avoid noise
                                        secondBeat = false; // when we get the heartbeat back
                                    }
                        }
void main(){
                        TRISA0=1;               //RA0 is input (ADC)
    __delay_ms(2000);
    I2C__Init();
    LCD_Init(0x4E);    // Initialize LCD module with I2C address = 0x4E
    LCD_Set_Cursor(1, 1);
    LCD_Write_String(" Heart Rate Monitor ");
                        TMR0_Initialize();
    __delay_ms(500);
    TMR0_StartTimer();
    INTERRUPT_GlobalInterruptEnable();
    INTERRUPT_PeripheralInterruptEnable();
                        while (1) {
                           switch (state) {

                                                                case READ_ADC:{
                                                                                adc();

                                                                                state =CAL_HBEAT;
                                                                                break;
                                                                              }
                                                                case CAL_HBEAT:{
```

```
                                                                                                                                                                                                                                                                                                                                                                                                                                                                                                                                                                                                                                                                                                                                                                                                                                                                                                                                                                                                                                                                                                                                                                                                                                                                                                                                                                                                                                                                                                                                                                                                                                                                                                                                                                                                                                                                                                                                                                                                                                                                                                                                                                                                                                                                                                                                                                                                                                                                                                                                                                                                                                                                                                                                                                                                                                                                                                                                                                                                                                                                                                                                                                                                                                                                                                                                                                                                                                                                                                                                                                                                                                                                                                                                                                                                                                                                                                                                                                                                                                                                                                                                                                                                                                                                                                                                                                                                                                                                                                                                                                                                                                                                                                                                                                                                                                                                                                                                                                                                                                                                                                                                                                                                                                                                                                                                                                                                                                                                                                                                                                                                                                                                                                                                                                                                                                                                                                                                                                                                                                                                                                                                                                                                                                                                                                                                                                                                                                                                                                                                                                                                                                                                                                                                                                                                                                                                                                                                                                                                                                calculate_heart_beat(adcval);
                                                                                                                                                                                                                                                                                                                                                                                                                                                                                                                                                                                                                                                                                                                                                                                                                                                                                                                                                                                                                                                                                                                                                                                                                                                                                                                                                                                                                                                                                                                                                                                                                                                                                                                                                                                                                                                                                                                                                                                                                                                                                                                                                                                                                                                                                                                                                                                                                                                                                                                                                                                                                                                                                                                                                                                                                                                                                                                                                                                                                                                                                                                                                                                                                                                                                                                                                                                                                                                                                                                                                                                                                                                                                                                                                                                                                                                                                                                                                                                                                                                                                                                                                                                                                                                                                                                                                                                                                                                                                                                                                                                                                                                                                                                                                                                                                                                                                                                                                                                                                                                                                                                                                                                                                                                                                                                                                                                                                                                                                                                                                                                                                                                                                                                                                                                                                                                                                                                state = SHO_HBEAT;
                                                                                                                                                                                                                                                                                                                                                                                                                                                                                                                                                                                                                                                                                                                                                                                                                                                                                                                                                                                                                                                                                                                                                                                                                                                                                                                                                                                                                                                                                                                                                                                                                                                                                                                                                                                                                                                                                                                                                                                                                                                                                                                                                                                                                                                                                                                                                                                                                                                                                                                                                                                                                                                                                                                                                                                                                                                                                                                                                                                                                                                                                                                                                                                                                                                                                                                                                                                                                                                                                                                                                                                                                                                                                                                                                                                                                                                                                                                                                                                                                                                                                                                                                                                                                                                                                                                                                                                                                                                                                                                                                                                                                                                                                                                                                                                                                                                                                                                                                                                                                                                                                                                                                                                                                                                                                                                                                                                                                                                                                                                                                                                                                                                                                                                                                                                                                                                                break;
                                                                                                                                                                                                                                                                                                                                                                                                                                                                                                                                                                                                                                                                                                                                                                                                                                                                                                                                                                                                                                                                                                                                                                                                                                                                                                                                                                                                                                                                                                                                                                                                                                                                                                                                                                                                                                                                                                                                                                                                                                                                                                                                                                                                                                                                                                                                                                                                                                                                                                                                                                                                                                                                                                                                                                                                                                                                                                                                                                                                                                                                                                                                                                                                                                                                                                                                                                                                                                                                                                                                                                                                                                                                                                                                                                                                                                                                                                                                                                                                                                                                                                                                                                                                                                                                                                                                                                                                                                                                                                                                                                                                                                                                                                                                                                                                                                                                                                                                                                                                                                                                                                                                                                                                                                                                                                                                                                                                                                                                                                                                                                                                                                                                                                                                                                                                                                                                                                                                                                                                                                                                                                                                                                                                                                                                                                                                                                                                                                                                                                                                                                                                                                                                                                                                                                                                                                                                                                                                                                                                                                                                                                                                                                                                                                                                                                                                                                                                                                                                                                                                                                                                                                                                                                                                                                                                                                                                                                                                                                                                                
                                                                                                                                                                                                                                                                                                                                                                                                                                                                                                                                                                                                                                                                                                                                                                                                                                                                                                                                                                                                                                                                                                                                                                                                                                                                                                                                                                                                                                                                                                                                                                                                                                                                                                                                                                                                                                                                                                                                                                                                                                                                                                                                                                                                                                                                                                                                                                                                                                                                                                                                                                                                                                                                                                                                                                                                                                                                                                                                                                                                                                                                                                                                                                                                                                                                                                                                                                                                                                                                                                                                                                                                                                                                                                                                                                                                                                                                                                                                                                                                                                                                                                                                                                                                                                                                                                                                                                                                                                                                                                                                                                                                                                                                                                                                                                                                                                                                                                                                                                                                                                                                                                                                                                                                                                                                                                                                                                                                                                                                                                                                                                                                                                                                                                                                                                                                                                                                                                                                                                                                                                                                                                                                                                                                                                                                                                                                                                                                                                                                                                                                                                                                                                                                                                                                                                                                                                                                                                                                                                                                                                                                                                                                                                                                                                                                                                                                                                                                                                                                                                                                                                                                                                                                                                                                                                                                                                                                                                                                                
void adc()   {
                                                                                                                                                                                                                                                                                                                                                                                                                                                                                                                                                                                                                                                                                                
```

```
    // Set TMR0 to the options selected in the User Interface
    // T0PS 1:256; T0SE Increment_hi_lo; T0CS FOSC/4; PSA assigned;
    //OPTION_REG = 0x04;
    OPTION_REGbits.T0CS = 0;
    OPTION_REGbits.T0SE = 1;
    OPTION_REGbits.PSA = 0;             // prescale use for only Timer0 not for WatchDog_timer
    OPTION_REGbits.PS = 0x07;
    TMR0 = (uint8_t)(tmr0_mask & (256-(((2 *200000000)/(256*4))/1000)));     // delay for 2ms
    // TimerCountMax - (((delay(ms) * Focs(hz)) / (PreScale_Val * 4)) / 1000)

    // Clear Interrupt flag before enabling the interrupt
    INTCONbits.TMR0IF = 0;
    // Enabling TMR0 interrupt.
    INTCONbits.TMR0IE = 0;
}
void TMR0_StartTimer(void) {
    // Start the Timer by writing to TMR0ON bit
    //T0CONbits.TMR0ON = 1;
    INTCONbits.TMR0IE = 1;
}
void TMR0_StopTimer(void) {
    // Stop the Timer by writing to TMR0ON bit
    //T0CONbits.TMR0ON = 0;
    INTCONbits.TMR0IE = 0;
}
void TMR0_ISR(void) {
    // disabling TMR0 interrupt.
    INTCONbits.TMR0IE = 0;
    // clear the TMR0 interrupt flag
    INTCONbits.TMR0IF = 0;
    // reload TMR0
    // Write to the Timer0 register
    TMR0 = (uint8_t)(tmr0_mask & (256-(((2 *200000000)/(256*4))/1000)));     // delay for 2ms
                // ADD OWN ISR CODE
                // add your TMR0 interrupt custom code    // TimerCountMax - (((delay(ms) * Focs(hz)) / (PreScale_Val * 4)) / 1000)
    state = READ_ADC;
    // Enabling TMR0 interrupt.
    INTCONbits.TMR0IE = 1;
}
```

“I2C_LCD.c”

```
#include <xc.h>
#include "I2C.h"

unsigned char RS, i2c_add, BackLight_State = LCD_BACKLIGHT;

//---------------[ I2C Routines ]-------------------
//--------------------------------------------------
void I2C__Init()
{
  SSPCON  = 0x28;
  SSPCON2 = 0x00;
  SSPSTAT = 0x00;
  SSPADD = ((_XTAL_FREQ/4)/I2C_BaudRate) - 1;
  SCL_D = 1;
  SDA_D = 1;
}

void I2C__Wait()
{
   while ((SSPSTAT & 0x04) || (SSPCON2 & 0x1F));
}

void I2C__Start()
{
   I2C__Wait();
   SEN = 1;
}

void I2C__RepeatedStart()
{
   I2C__Wait();
   RSEN = 1;
}

void I2C__Stop()
{
   I2C__Wait();
   PEN = 1;
}

void I2C_ACK(void)
{
            ACKDT = 0;                          // 0 -> ACK
            I2C__Wait();
   ACKEN = 1;                          // Send ACK
}

void I2C_NACK(void)
{
            ACKDT = 1;                          // 1 -> NACK
   I2C__Wait();
            ACKEN = 1;                          // Send NACK
}

unsigned char I2C__Write(unsigned char data)
{
   I2C__Wait();
   SSPBUF = data;
   while(!SSPIF);  // Wait Until Completion
            SSPIF = 0;
   return ACKSTAT;
}

unsigned char I2C_Read_Byte(void)
{
   //---[ Receive & Return A Byte ]---
            I2C__Wait();
   RCEN = 1;                  // Enable & Start Reception
            while(!SSPIF);    // Wait Until Completion
            SSPIF = 0;        // Clear The Interrupt Flag Bit
   I2C__Wait();
   return SSPBUF;      // Return The Received Byte
}
//=====================================================
```

```
//---------------[ LCD Routines ]----------------
//-----------------------------------------------------------

void LCD_Init(unsigned char I2C_Add)
{
  i2c_add = I2C_Add;
  IO_Expander_Write(0x00);
  __delay_ms(30);
  LCD_CMD(0x03);
  __delay_ms(5);
  LCD_CMD(0x03);
  __delay_ms(5);
  LCD_CMD(0x03);
  __delay_ms(5);
  LCD_CMD(LCD_RETURN_HOME);
  __delay_ms(5);
  LCD_CMD(0x28 | (LCD_TYPE << 2));
  __delay_ms(50);
  LCD_CMD(LCD_TURN_ON);
  __delay_ms(50);
  LCD_CMD(LCD_CLEAR);
  __delay_ms(50);
  LCD_CMD(LCD_ENTRY_MODE_SET | LCD_RETURN_HOME);
  __delay_ms(50);
}

void IO_Expander_Write(unsigned char Data)
{
  I2C__Start();
  I2C__Write(i2c_add);
  I2C__Write(Data | BackLight_State);
  I2C__Stop();
}

void LCD_Write_4Bit(unsigned char Nibble)
{
  // Get The RS Value To LSB OF Data
  Nibble |= RS;
  IO_Expander_Write(Nibble | 0x04);
  IO_Expander_Write(Nibble & 0xFB);
  __delay_us(50);
}

void LCD_CMD(unsigned char CMD)
{
  RS = 0; // Command Register Select
  LCD_Write_4Bit(CMD & 0xF0);
  LCD_Write_4Bit((CMD << 4) & 0xF0);
}

void LCD_Write_Char(char Data)
{
  RS = 1;  // Data Register Select
  LCD_Write_4Bit(Data & 0xF0);
  LCD_Write_4Bit((Data << 4) & 0xF0);
}

void LCD_Write_String(char* Str)
{
    for(int i=0; Str[i]!='\0'; i++)
       LCD_Write_Char(Str[i]);
}

void LCD_Set_Cursor(unsigned char ROW, unsigned char COL)
{
  switch(ROW)
  {
    case 2:
      LCD_CMD(0xC0 + COL-1);
      break;
    case 3:
      LCD_CMD(0x94 + COL-1);
      break;
    case 4:
      LCD_CMD(0xD4 + COL-1);
      break;
    // Case 1
    default:
      LCD_CMD(0x80 + COL-1);
```

```
  }
}

void Backlight()
{
  BackLight_State = LCD_BACKLIGHT;
  IO_Expander_Write(0);
}

void noBacklight()
{
  BackLight_State = LCD_NOBACKLIGHT;
  IO_Expander_Write(0);
}

void LCD_SL()
{
  LCD_CMD(0x18);
  __delay_us(40);
}

void LCD_SR()
{
  LCD_CMD(0x1C);
  __delay_us(40);
}

void LCD_Clear()
{
  LCD_CMD(0x01);
  __delay_us(40);
}
```

Run & Debugging

We turn the power ON to run our hardware. After comparing the obtained readings with the BPM of a Pulse Oximeter for reference, we observe that the obtained BPM from our hardware is a bit off. It is increased/ higher than normal.

Which means we are registering false peaks in our signal. Since this is mostly high frequency noise, we then raise the bar of Signal filtering in our code to avoid high frequency noise and remove false peaks. The threshold values of N are adjusted accordingly by debugging and running several times to fine-tune our results.

We then reprogram our PIC with the final code to run again.

Results

We finally can observe that our hardware outputs readings accurate within +-2 Beats of a Pulse Oximeter. This thus provides us with a reliable reading overall.

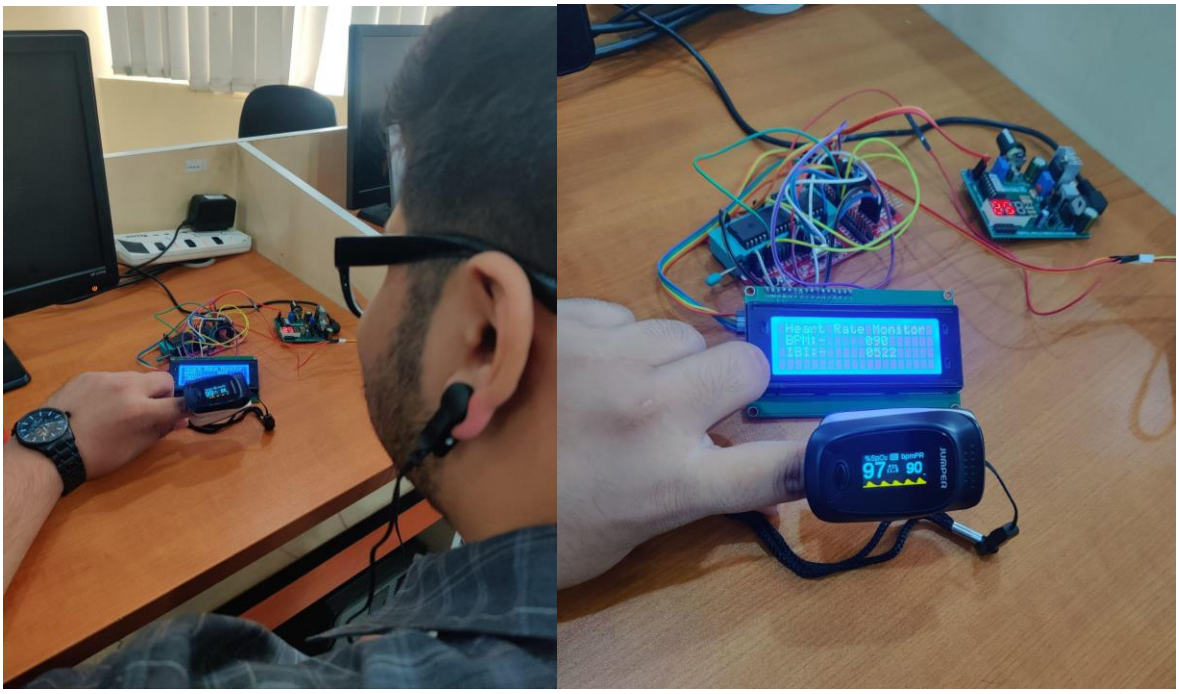

Figure: *Ear Clip Sensor Attached to Patient (Left); Sensor Reading Comparison (Right)*

Conclusion

Since our obtained results are accurate across the board, we can conclude that our project is successful in measuring the Heart Rate Accurately.

Reference

Circuit Digest. (n.d.). Heartbeat monitoring using PIC microcontroller and pulse sensor. Retrieved from https://circuitdigest.com/microcontroller-projects/heartbeat-monitoring-using-pic-microcontroller-and-pulse-sensor

Sali, S., Durge, P., Pokar, M., & Kasge, N. (2016). Microcontroller Based Heart Rate Monitor. International Journal of Science and Research (IJSR), 5.

Academia.edu. (n.d.). Heart Rate Measurement using PIC. Retrieved from https://www.academia.edu/31554003/_789823406_Heart_Rate_Measurement_using_PIC_docx

Microdigisoft. (n.d.). PIC16F877A interfacing I2C LCD 16x2 with PIC microcontrollers. Retrieved from https://microdigisoft.com/pic16f877a-interfacing-i2c-lcd-16x2-with-pic-microcontrollers/

Circuits Gallery. (n.d.). How to simulate PIC microcontroller in Proteus? Retrieved from https://www.circuitsgallery.com/how-to-simulate-pic-microcontroller-in-proteus/

Best Microcontroller Projects. (n.d.). Pulse rate sensor. Retrieved from https://www.best-microcontroller-projects.com/pulse-rate-sensor.html

Circuit Basics. (n.d.). Basics of the I2C communication protocol. Retrieved from https://www.circuitbasics.com/basics-of-the-i2c-communication-protocol/

Saeed Solutions. (2012, November). PIC16F877 LED blinking code Proteus simulation. Retrieved from https://saeedsolutions.blogspot.com/2012/11/pic16f877-led-blinking-code-proteus.html

PIC Microcontroller. (n.d.). PIC16F877 LCD code and Proteus simulation. Retrieved from https://pic-microcontroller.com/pic16f877-lcd-code-and-proteus-simulation/

Microdigisoft. (n.d.). PIC16F877A interfacing I2C LCD 16x2 with PIC microcontrollers. Retrieved from https://microdigisoft.com/pic16f877a-interfacing-i2c-lcd-16x2-with-pic-microcontrollers/

DeepBluEmbedded. (n.d.). Interfacing I2C LCD 16x2 tutorial with PIC microcontrollers (MPLAB XC8). Retrieved from https://deepbluembedded.com/interfacing-i2c-lcd-16x2-tutorial-with-pic-microcontrollers-mplab-xc8/

Microcontrollers Lab. (n.d.). PIC16F877A introduction & features. Retrieved from https://microcontrollerslab.com/pic16f877a-introduction-features/

Microdigisoft. (n.d.). Blinking LED using PIC microcontroller and Proteus. Retrieved from https://microdigisoft.com/blinking-led-using-pic-microcontroller-and-proteus/

EmbedJournal. (n.d.). Getting started with PIC microcontrollers. Retrieved from https://embedjournal.com/getting-started-with-pic-microcontrollers/

Instructables. (n.d.). How to make a PIC programmer PicKit 2 clone. Retrieved from https://www.instructables.com/How-to-Make-a-PIC-Programmer-PicKit-2-clone/

Microchip Technology Inc. (n.d.). Technical Brief: DS90003261A. Retrieved from http://ww1.microchip.com/downloads/en/Appnotes/TB3261-Technical-Brief-DS90003261A.pdf