Digital Coursework

1 Task1.1

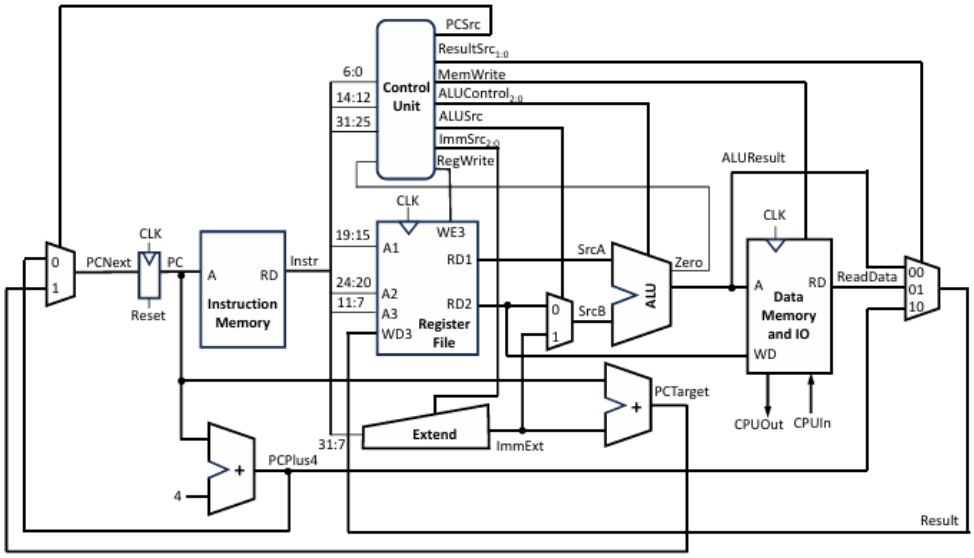

Figure 1: RISC-V microarchitecture

Fig. 1. Original circuit.

Author's Contact Information:

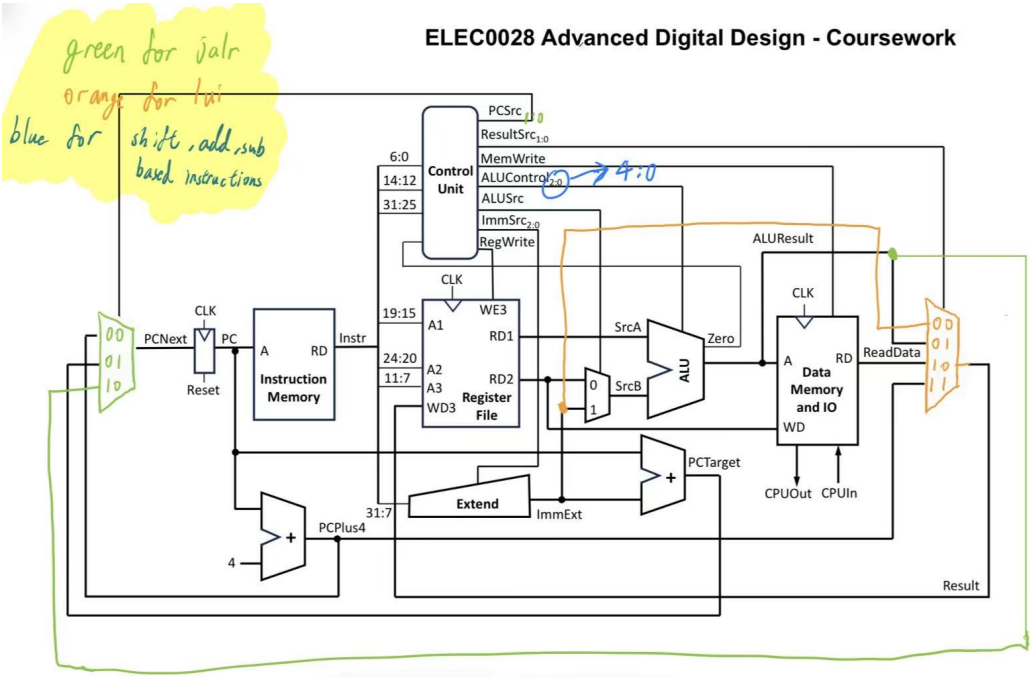

Fig. 2. Redesign of the original circuit.

1.1 Problems of the Original Microarchitecture

The original microarchitecture shown in Figure 1 cannot support all RV32I instructions due to several structural limitations. The key issues and corresponding modifications (shown in Figure 2) are summarised below.

1.1.1 Limitation 1: Missing PC Input(`jalr`*).* The PC multiplexer only selects between $PC + 4$ and $PC + \text{Imm}$, and does not support the $rs1 + imm$ operation required by `jalr`. As a result, `jalr` cannot be executed.

To resolve this, the PC selection logic is extended by introducing a third input from `ALUResult`, which is $rs1 + imm$, and expanding `PCSrc` to 2 bits.

1.1.2 Limitation 2: Immediate Cannot Be Written Back (`lui`*).* The output of the Extend unit (`ImmExt`) is not connected to the write-back path, and therefore cannot be stored in the register file. This prevents execution of the `lui` instruction.

This is addressed by adding `ImmExt` as an additional input to the Result multiplexer and extending `ResultSrc` accordingly.

1.1.3 Limitation 3: Insufficient ALU Control Width (`all operations that rely on addition, subtraction or shift functionality`*).* The ALU requires a 5-bit control signal to support all operations, but only a 3-bit control signal is provided in the original design. This leads to incomplete or incorrect execution of multiple instructions, including arithmetic operations (`add`, `sub`, `addi`), shift operations (`sll`, `srl`, `slli`, `srli`), comparison operations (`slt`, `slti`), memory access instructions (`lw`, `sw`), and control flow instructions (`beq`, `bne`, `blt`, `bge`, `jalr`). In particular,

all operations that rely on addition/subtraction or shift functionality may behave incorrectly due to insufficient ALU control signals.

To fix this, the `ALUControl` signal is expanded from 3 bits to 5 bits, allowing full control of all ALU functionalities.

1.2 Justification for Not Using the Negative Signal

Although the ALU shown in Figure 2 provides both `Zero` and `Negative` outputs, the `Negative` signal is not required in the redesigned processor. The reason is that all comparison-related instructions in the required instruction subset can already be implemented using the `SLT` operation together with the `Zero` signal. :contentReference[oaicite:2]index=2

For `slt` and `slti`, the ALU directly produces a result of either 1 or 0, which is then written back to the destination register. Therefore, these instructions do not require a separate sign output.

For branch instructions, the `ALURESULT` does not need to be written back, so only the branch decision matters. This means the `SLT` result can be used indirectly through the `Zero` flag.

For `blt`, the ALU is configured to perform the `SLT` operation:

- if $rs1 < rs2$, then the SLT result is 1, so `Zero` = 0, and the branch should be taken;
- if $rs1 \geq rs2$, then the SLT result is 0, so `Zero` = 1, and the branch should not be taken.

Therefore, for `blt`, the branch decision can be implemented using:

$$\texttt{PCSrc} = \{\texttt{0}, \sim \texttt{Zero}\}$$

Similarly, for `bge`:

- if $rs1 < rs2$, then the SLT result is 1, so `Zero` = 0, and the branch should not be taken;
- if $rs1 \geq rs2$, then the SLT result is 0, so `Zero` = 1, and the branch should be taken.

Hence, for `bge`, the branch decision can be implemented as:

$$\texttt{PCSrc} = \{\texttt{0}, \texttt{Zero}\}$$

This shows that `Zero` is sufficient to distinguish both branch conditions once the ALU is operating in `SLT` mode. As a result, the `Negative` output does not provide any essential additional information for the supported instruction set.

In summary, the `Negative` signal can be omitted. In the following sections, the processor design presented in this report consistently adopts the implementation without the `Negative` signal. The simulation results in Section **??** confirm that all required instructions operate correctly under this design, demonstrating that the `Negative` output is not necessary.

2 Task1.2

instr	RegWrite	ImmSrc	ALUSrc	ALUControl	MemWrite	ResultSrc	PCSrc
add	1	XXX	0	X0X10	0	01	00
sub	1	XXX	0	X1X10	0	01	00
or	1	XXX	0	XX111	0	01	00
and	1	XXX	0	XX011	0	01	00
sll	1	XXX	0	0XX00	0	01	00
srl	1	XXX	0	1XX00	0	01	00
slt	1	XXX	0	X1X01	0	01	00
addi	1	000	1	X0X10	0	01	00
ori	1	000	1	XX111	0	01	00
andi	1	000	1	XX011	0	01	00
slli	1	000	1	0XX00	0	01	00
srli	1	000	1	1XX00	0	01	00
slti	1	000	1	X1X01	0	01	00
lw	1	000	1	X0X10	0	10	00
sw	0	001	1	X0X10	1	XX	00
beq	0	010	0	X1X10	0	XX	{0,Zero}
bne	0	010	0	X1X10	0	XX	{0,~Zero}
blt	0	010	0	X1X01	0	XX	{0,~Zero}
bge	0	010	0	X1X01	0	XX	{0,Zero}
jal	1	100	X	XXXXX	0	11	01
jalr	1	000	1	X0X10	0	11	10
lui	1	011	X	XXXXX	0	00	00

Fig. 3. Control signals for supported instructions.

Figure 3 summarises the control signals for all supported instructions. Each signal is defined as follows.

2.1 Meaning of Control Signals

RegWrite enables writing the Result back to register `rd`.

ImmSrc selects the type of immediate generated by the Extend unit:

- 000: I-type
- 001: S-type
- 010: B-type
- 011: U-type
- 100: J-type

ALUSrc selects the second ALU operand:

- 0: register value (RD2)
- 1: immediate (ImmExt)

ALUControl[4:0] determines the ALU operation:

- Bit [4]: shift direction (0 = left, 1 = right)
- Bit [3]: arithmetic (0 = add, 1 = sub)
- Bit [2]: logic (0 = and, 1 = or)
- Bits [1:0]:
  - 00: shift
  - 01: set-less-than
  - 10: arithmetic

  - 11: logic

MemWrite enables writing to data memory.
ResultSrc selects the write-back source:

- 00: ImmExt
- 01: ALUResult
- 10: ReadData
- 11: PCPlus4

PCSrc selects the next PC:

- 00: $PC + 4$
- 01: PC + ImmExt
- 10: ALUResult

For branch instructions, symbolic forms are used:

- {0,Zero}: branch when Zero = 1
- {0,~Zero}: branch when Zero = 0

2.2 Instruction-by-Instruction Explanation

2.2.1 R-type Arithmetic and Logic Instructions (`add`*,* `sub`*,* `and`*,* `or`*).* These instructions use two register operands, so `ALUSrc = 0` and `RegWrite = 1`. The result is written back from the ALU (`ResultSrc = 01`), and execution proceeds sequentially (`PCSrc = 00`).

The difference lies in `ALUControl`: `add` uses addition (`X0X10`), `sub` uses subtraction (`X1X10`), while `and` and `or` use the logic path (`XX011` and `XX111`, respectively).

2.2.2 R-type Shift and Comparison Instructions (`sll`*,* `srl`*,* `slt`*).* These instructions also use register operands (`ALUSrc = 0`, `RegWrite = 1`, `ResultSrc = 01`).

Shift instructions (`sll`, `srl`) select the shift path (`[1:0] = 00`), with bit [4] determining direction (left or right).

`slt` selects the comparison path (`[1:0] = 01`), producing a result of 0 or 1.

2.2.3 I-type Arithmetic and Logic Instructions (`addi`*,* `andi`*,* `ori`*).* These instructions use an immediate operand, so `ImmSrc = 000` and `ALUSrc = 1`. The ALU result is written back to the register file.

The ALU operation matches their R-type counterparts: addition for `addi`, AND for `andi`, and OR for `ori`.

2.2.4 I-type Shift and Comparison Instructions (`slli`*,* `srli`*,* `slti`*).* These instructions also use `ImmExt` as the second operand (`ALUSrc = 1`).

Shift instructions select the shift path, using the lower 5 bits of the immediate as the shift amount.

`slti` performs comparison using the SLT path and writes the result (0 or 1) to the destination register.

2.2.5 Memory Instructions (`lw`*,* `sw`*).* Both instructions compute the effective address using addition (`rs1 + ImmExt`), so `ALUSrc = 1` and `ALUControl` selects addition.

For `lw`, `RegWrite = 1` and `ResultSrc = 10` so that data read from memory is written to the register file.

For `sw`, `RegWrite = 0` and `MemWrite = 1`, storing the value of `rs2` into memory.

2.2.6 Branch Instructions (`beq`*,* `bne`*,* `blt`*,* `bge`*).* These instructions do not write to the register file (`RegWrite = 0`) and use B-type immediates.

`beq` and `bne` use subtraction to compare operands, with branching controlled by the `Zero` signal.

blt and bge use the SLT operation. The branch decision is determined from the Zero flag: blt branches when Zero = 0, while bge branches when Zero = 1.

More detailed reasoning for this design choice is discussed in Section 1.2.

*2.2.7 Jump Instructions (*jal, jalr*).* Both instructions write $PC + 4$ to the destination register (ResultSrc = 11, RegWrite = 1).

jal uses a J-type immediate and sets PCSrc = 01, selecting PC + ImmExt.

jalr uses an I-type immediate and computes the target address using the ALU (rs1 + ImmExt), so PCSrc = 10.

*2.2.8 Immediate Upper Instruction (*lui*).* lui directly writes the U-type immediate to the destination register, so ResultSrc = 00. The ALU is not used, and execution proceeds sequentially.

3 Task1.3

3.1 SystemVerilog code of the sub-blocks

3.1.1 Program Counter. The SystemVerilog implementation of the Program Counter module is shown below.

```
module program_counter (
    input  logic        CLK,
    input  logic        reset,
    input  logic [31:0] PCNext,
    output logic [31:0] PC
);

always_ff @(posedge CLK) begin
    if (reset)
        PC <= 32'h00000000;
    else
        PC <= PCNext;
end

endmodule
```

Listing 1. Program Counter module

3.1.2 Extend. The SystemVerilog implementation of the Extend module is shown below.

```
module extend (
    input  logic [31:0] Instr,      // Full 32-bit instruction
    input  logic [2:0]  ImmSrc,     // Immediate type selector
    output logic [31:0] ImmExt      // Extended immediate
);

always_comb begin
    case (ImmSrc)
        3'b000: begin
            // I-type immediate
            ImmExt = {{20{Instr[31]}}, Instr[31:20]};
        end

        3'b001: begin
```

```
            // S-type immediate
            ImmExt = {{20{Instr[31]}}, Instr[31:25], Instr[11:7]};
        end

        3'b010: begin
            // B-type immediate
            ImmExt = {{19{Instr[31]}}, Instr[31], Instr[7], Instr[30:25],
                 Instr[11:8], 1'b0};
        end

        3'b011: begin
            // U-type immediate
            ImmExt = {Instr[31:12], 12'b0};
        end

        3'b100: begin
            // J-type immediate
            ImmExt = {{12{Instr[31]}}, Instr[19:12], Instr[20], Instr
                [30:21], 1'b0};
        end

        default: begin
            ImmExt = 32'h00000000;
        end

    endcase
end

endmodule
```

Listing 2. Extend module

3.1.3 Arithmetic Logic Unit. The SystemVerilog implementation of the Arithmetic Logic Unit module is shown below.

```
module alu (
    input  logic [31:0] A,             // ALU input A
    input  logic [31:0] B,             // ALU input B
    input  logic [4:0]  ALUControl,    // ALU control signal
    output logic [31:0] ALUResult,     // ALU output result
    output logic        Zero          // Zero flag
);

    logic [31:0] shift_result;
    logic [31:0] arith_result;
    logic [31:0] logic_result;
    logic [31:0] slt_result;


    always_comb begin

        // Shift path
```

```
        // ALUControl[4] = 0 for SLL, 1 for SRL
        case (ALUControl[4])
            1'b0: shift_result = A << B[4:0];
            1'b1: shift_result = A >> B[4:0];
        endcase

        // Arithmetic path
        // ALUControl[3] = 0 for add, 1 for subtract
        case (ALUControl[3])
            1'b0: arith_result = A + B;
            1'b1: arith_result = A - B;
        endcase

        // Logic path
        // ALUControl[2] = 0 for AND, 1 for OR
        case (ALUControl[2])
            1'b0: logic_result = A & B;
            1'b1: logic_result = A | B;
        endcase

        // Signed comparison must not rely only on the subtraction sign bit,
        // because subtraction can overflow when operands have different signs.
        slt_result = {31'b0, $signed(A) < $signed(B)};

        // Main ALU output multiplexer
        case (ALUControl[1:0])
            2'b00: ALUResult = shift_result;
            2'b01: ALUResult = slt_result;
            2'b10: ALUResult = arith_result;
            2'b11: ALUResult = logic_result;
            default: ALUResult = 32'h0;
        endcase
    end

    // Status flags
    assign Zero     = (ALUResult == 32'h0);

endmodule
```

Listing 3. Arithmetic Logic Unit module

3.1.4 Control Unit. The SystemVerilog implementation of the Control Unit module is shown below.

```
module control_unit (
    input  logic [31:0] instr,
    input  logic        Zero,

    output logic        RegWrite,
    output logic [2:0]  ImmSrc,
    output logic        ALUSrc,
    output logic [4:0]  ALUControl,
```

```
    output logic        MemWrite,
    output logic [1:0]  ResultSrc,
    output logic [1:0]  PCSrc
);

    logic [6:0] opcode;
    logic [2:0] funct3;
    logic [6:0] funct7;

    assign opcode = instr[6:0];
    assign funct3 = instr[14:12];
    assign funct7 = instr[31:25];

    always_comb begin
        // default values
        RegWrite   = 1'b0;
        ImmSrc     = 3'b000;
        ALUSrc     = 1'b0;
        ALUControl = 5'b00000;
        MemWrite   = 1'b0;
        ResultSrc  = 2'b00;
        PCSrc      = 2'b00;

        case (opcode)

            // =========================
            // R-type: add, sub, or, and, sll, srl, slt
            // opcode = 0110011
            // =========================
            7'b0110011: begin
                RegWrite  = 1'b1;
                ALUSrc    = 1'b0;
                ResultSrc = 2'b01;
                PCSrc     = 2'b00;

                case (funct3)
                    3'b000: begin
                        if (funct7 == 7'b0100000)
                            ALUControl = 5'b01010; // sub
                        else
                            ALUControl = 5'b00010; // add
                    end
                    3'b110: ALUControl = 5'b00111; // or
                    3'b111: ALUControl = 5'b00011; // and
                    3'b001: ALUControl = 5'b00000; // sll
                    3'b101: ALUControl = 5'b10000; // srl
                    3'b010: ALUControl = 5'b01001; // slt
                    default: ALUControl = 5'b00000;
                endcase
            end

            // =========================
```

```
            // I-type arithmetic:
            // addi, ori, andi, slli, srli, slti
            // opcode = 0010011
            // ========================
            7'b0010011: begin
                RegWrite  = 1'b1;
                ImmSrc    = 3'b000;
                ALUSrc    = 1'b1;
                ResultSrc = 2'b01;
                PCSrc     = 2'b00;

                case (funct3)
                    3'b000: ALUControl = 5'b00010; // addi
                    3'b110: ALUControl = 5'b00111; // ori
                    3'b111: ALUControl = 5'b00011; // andi
                    3'b001: ALUControl = 5'b00000; // slli
                    3'b101: ALUControl = 5'b10000; // srli
                    3'b010: ALUControl = 5'b01001; // slti
                    default: ALUControl = 5'b00000;
                endcase
            end

            // ========================
            // lw
            // opcode = 0000011
            // ========================
            7'b0000011: begin
                RegWrite   = 1'b1;
                ImmSrc     = 3'b000;
                ALUSrc     = 1'b1;
                ALUControl = 5'b00010; // add for address
                MemWrite   = 1'b0;
                ResultSrc  = 2'b10;
                PCSrc      = 2'b00;
            end

            // ========================
            // sw
            // opcode = 0100011
            // ========================
            7'b0100011: begin
                RegWrite   = 1'b0;
                ImmSrc     = 3'b001;
                ALUSrc     = 1'b1;
                ALUControl = 5'b00010; // add for address
                MemWrite   = 1'b1;
                ResultSrc  = 2'b00;    // don't care
                PCSrc      = 2'b00;
            end

            // ========================
            // Branches: beq, bne, blt, bge
```

```
            // opcode = 1100011
            // ========================
            7'b1100011: begin
                RegWrite  = 1'b0;
                ImmSrc    = 3'b010;
                ALUSrc    = 1'b0;
                MemWrite  = 1'b0;
                ResultSrc = 2'b00; // don't care

                case (funct3)
                    3'b000: begin
                        ALUControl = 5'b01010;           // beq -> sub
                        PCSrc      = Zero ? 2'b01 : 2'b00;
                    end
                    3'b001: begin
                        ALUControl = 5'b01010;           // bne -> sub
                        PCSrc      = Zero ? 2'b00 : 2'b01;
                    end
                    3'b100: begin
                        ALUControl = 5'b01001;           // blt -> slt
                        PCSrc      = Zero ? 2'b00 : 2'b01;
                    end
                    3'b101: begin
                        ALUControl = 5'b01001;           // bge -> slt
                        PCSrc      = Zero ? 2'b01 : 2'b00;
                    end
                    default: begin
                        ALUControl = 5'b00010;
                        PCSrc      = 2'b00;
                    end
                endcase
            end

            // ========================
            // jal
            // opcode = 1101111
            // ========================
            7'b1101111: begin
                RegWrite   = 1'b1;
                ImmSrc     = 3'b100;
                ALUSrc     = 1'b0;      // don't care
                ALUControl = 5'b00000;  // don't care
                MemWrite   = 1'b0;
                ResultSrc  = 2'b11;     // write PC+4
                PCSrc      = 2'b01;
            end

            // ========================
            // jalr
            // opcode = 1100111
            // ========================
            7'b1100111: begin
```

```
                RegWrite   = 1'b1;
                ImmSrc     = 3'b000;
                ALUSrc     = 1'b1;
                ALUControl = 5'b00010;  // rs1 + imm
                MemWrite   = 1'b0;
                ResultSrc  = 2'b11;     // write PC+4
                PCSrc      = 2'b10;
            end

            // ========================
            // lui
            // opcode = 0110111
            // ========================
            7'b0110111: begin
                RegWrite   = 1'b1;
                ImmSrc     = 3'b011;
                ALUSrc     = 1'b0;      // don't care
                ALUControl = 5'b00000;  // don't care
                MemWrite   = 1'b0;
                ResultSrc  = 2'b00;     // immediate
                PCSrc      = 2'b00;
            end

            default: begin
                RegWrite   = 1'b0;
                ImmSrc     = 3'b000;
                ALUSrc     = 1'b0;
                ALUControl = 5'b00000;
                MemWrite   = 1'b0;
                ResultSrc  = 2'b00;
                PCSrc      = 2'b00;
            end
        endcase
    end

endmodule
```

Listing 4. Control Unit module

3.2 SystemVerilog testbench of the sub-blocks

3.2.1 Program Counter. The testbench code of the Program Counter module is shown below.

```
`timescale 1ns/1ps
`include "./SVcode/pc/pc.sv"

module program_counter_tb;

    logic        CLK;
    logic        reset;
    logic [31:0] PCNext;
    logic [31:0] PC;

```

```
    program_counter dut (
        .CLK(CLK),
        .reset(reset),
        .PCNext(PCNext),
        .PC(PC)
    );

    initial begin
        $dumpfile("program_counter_tb.vcd");
        $dumpvars(0, program_counter_tb);
    end

    initial begin
        CLK = 0;
        forever #5 CLK = ~CLK;
    end

    initial begin
        $display("Time\tCLK\treset\tPCNext\t\tPC");

        $monitor("%0t\t%b\t%b\t%h\t%h", $time, CLK, reset, PCNext, PC);

        reset  = 1;
        PCNext = 32'h00000004;
        #10;

        reset  = 0;
        PCNext = 32'h00000004;
        #10;

        PCNext = 32'h00000008;
        #10;

        PCNext = 32'h0000000C;
        #10;

        reset = 1;
        PCNext = 32'h00000010;
        #10;

        reset = 0;
        PCNext = 32'h00000014;
        #10;

        $finish;
    end

endmodule
```

Listing 5. Program Counter testbench

```
Time    CLK     reset   PCNext          PC
0       0       1       00000004        xxxxxxxx
5000    1       1       00000004        00000000
10000   0       0       00000004        00000000
15000   1       0       00000004        00000004
20000   0       0       00000008        00000004
25000   1       0       00000008        00000008
30000   0       0       0000000c        00000008
35000   1       0       0000000c        0000000c
40000   0       1       00000010        0000000c
45000   1       1       00000010        00000000
50000   0       0       00000014        00000000
55000   1       0       00000014        00000014
D:\MyCode\latex\Verilog\SVcode\pc\pc_tb.sv:55: $finish called at 60000 (1ps)
60000   0       0       00000014        00000014
```

Fig. 4. Terminal result screenshot for the Program Counter module.

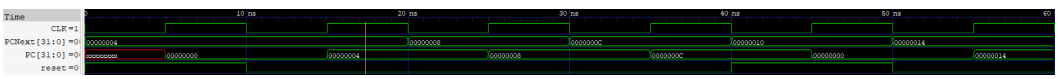

Fig. 5. GTKWave result screenshot for the Program Counter module.

The analysis of the Program Counter testbench is shown below.

The simulation results show that the Program Counter module operates correctly. Whenever reset = 1, the PC is synchronously reset to 0 at the next positive clock edge. Otherwise, the PC is updated with the value of PCNext on each positive clock edge, which matches the expected behaviour of the design.

At the beginning of simulation, the PC output appears as X. This is normal, because the register has not yet been initialised before the first active clock edge. After the first clock edge, the PC takes a definite value determined by either reset or PCNext, so the module then behaves as expected.

3.2.2 Extend. The testbench code of the Extend module is shown below.

```
`timescale 1ns/1ps
`include "./SVcode/extend/extend.sv"

module extend_tb;

    logic [31:0] Instr;
    logic [2:0]  ImmSrc;
    logic [31:0] ImmExt;

    extend dut (
        .Instr(Instr),
        .ImmSrc(ImmSrc),
        .ImmExt(ImmExt)
    );

```

```
    initial begin
        $dumpfile("extend_tb.vcd");
        $dumpvars(0, extend_tb);
    end

    initial begin
        $display("Time\tImmSrc\tInstr\t\t\tImmExt");
        $monitor("%0t\t%b\t%h\t%h", $time, ImmSrc, Instr, ImmExt);

        // I-type immediate tests
        Instr  = 32'h00500093;   // imm = 5
        ImmSrc = 3'b000;
        #10;

        Instr  = 32'h00C00113;   // imm = 12
        ImmSrc = 3'b000;
        #10;

        Instr  = 32'hFFF00093;   // imm = -1
        ImmSrc = 3'b000;
        #10;

        Instr  = 32'h80000093;   // imm = -2048
        ImmSrc = 3'b000;
        #10;

        // S-type immediate tests
        Instr  = 32'h0020A423;   // imm = 8
        ImmSrc = 3'b001;
        #10;

        Instr  = 32'hFE20AE23;   // imm = -4
        ImmSrc = 3'b001;
        #10;

        Instr  = 32'h7E20AF23;   // positive S-type immediate
        ImmSrc = 3'b001;
        #10;

        // B-type immediate tests
        Instr  = 32'h00208863;   // imm = 16
        ImmSrc = 3'b010;
        #10;

        Instr  = 32'hFE208EE3;   // negative branch immediate
        ImmSrc = 3'b010;
        #10;

        Instr  = 32'h00000063;   // imm = 0
        ImmSrc = 3'b010;
        #10;

```

```
        Instr  = 32'h7E208FE3;   // positive branch immediate
        ImmSrc = 3'b010;
        #10;

        // U-type immediate tests
        Instr  = 32'h123450B7;   // imm = 0x12345000
        ImmSrc = 3'b011;
        #10;

        Instr  = 32'hABCDE137;   // imm = 0xABCDE000
        ImmSrc = 3'b011;
        #10;

        Instr  = 32'hFFF00037;   // imm = 0xFFF00000
        ImmSrc = 3'b011;
        #10;

        // J-type immediate tests
        Instr  = 32'h001000EF;   // small positive jump immediate
        ImmSrc = 3'b100;
        #10;

        Instr  = 32'h7FF000EF;   // large positive jump immediate
        ImmSrc = 3'b100;
        #10;

        Instr  = 32'h800000EF;   // negative jump immediate
        ImmSrc = 3'b100;
        #10;

        Instr  = 32'h000000EF;   // imm = 0
        ImmSrc = 3'b100;
        #10;

        $finish;
    end

endmodule
```

Listing 6. Extend testbench

```
VCD info: dumpfile extend_tb.vcd opened for output.
Time     ImmSrc  Instr                    ImmExt
0        000     00500093          00000005
10000    000     00c00113          0000000c
20000    000     fff00093          ffffffff
30000    000     80000093          fffff800
40000    001     0020a423          00000008
50000    001     fe20ae23          fffffffc
60000    001     7e20af23          000007fe
70000    010     00208863          00000010
80000    010     fe208ee3          fffffffc
90000    010     00000063          00000000
100000   010     7e208fe3          00000ffe
110000   011     123450b7          12345000
120000   011     abcde137          abcde000
130000   011     fff00037          fff00000
140000   100     001000ef          00000800
150000   100     7ff000ef          00000ffe
160000   100     800000ef          fff00000
170000   100     000000ef          00000000
```

Fig. 6. Terminal result screenshot for the Extend module.

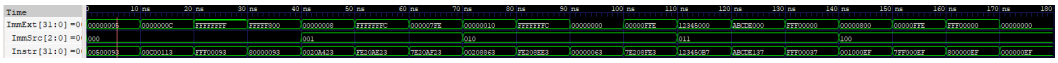

Fig. 7. GTKWave result screenshot for the Extend module.

The analysis of the Extend testbench is shown below.

The simulation results show that the Extend module operates correctly. The test cases cover all required immediate formats, including I-type, S-type, B-type, U-type, and J-type instructions. Positive values, negative values, and boundary cases were all tested.

For each instruction format, the module correctly extracts the immediate field from the instruction and performs the required sign extension or bit concatenation. No incorrect or unexpected outputs were observed during simulation. Therefore, the Extend module satisfies the functional requirements of the design.

3.2.3 Arithmetic Logic Unit. The testbench code of the Arithmetic Logic Unit module is shown below.

```
`timescale 1ns/1ps
`include "./SVcode/alu/alu.sv"

module alu_tb;

    logic [31:0] A;
    logic [31:0] B;
    logic [4:0]  ALUControl;
    logic [31:0] ALUResult;
    logic        Zero;

    alu dut (
        .A(A),
        .B(B),
        .ALUControl(ALUControl),
        .ALUResult(ALUResult),
        .Zero(Zero)
    );

    initial begin
        $dumpfile("alu_tb.vcd");
        $dumpvars(0, alu_tb);
    end

    initial begin
        $display("Time\tALUControl\tA\t\tB\t\tALUResult\tZero");
        $monitor("%0t\t%b\t\t%h\t%h\t%h\t%b",
                 $time, ALUControl, A, B, ALUResult, Zero);

        // ==========================================================
        // Shift operation tests
        // ALUControl[1:0] = 00
        // ALUControl[4]   = 0 for SLL, 1 for SRL
        // ==========================================================

        // SLL: 1 << 2 = 4
        A = 32'h00000001; B = 32'h00000002; ALUControl = 5'b00000;
        #10;

        // SLL: 3 << 4 = 0x30
        A = 32'h00000003; B = 32'h00000004; ALUControl = 5'b00000;
        #10;

        // SLL: shift by 0
        A = 32'h12345678; B = 32'h00000000; ALUControl = 5'b00000;
        #10;

        // SRL: 0x10 >> 2 = 0x4
        A = 32'h00000010; B = 32'h00000002; ALUControl = 5'b10000;
```

```
        #10;

        // SRL: 0x80000000 >> 4 = 0x08000000
        A = 32'h80000000; B = 32'h00000004; ALUControl = 5'b10000;
        #10;

        // SRL: shift by 0
        A = 32'h87654321; B = 32'h00000000; ALUControl = 5'b10000;
        #10;

        // ==========================================================
        // SLT operation tests
        // ALUControl[1:0] = 01
        // Arithmetic path uses subtraction when ALUControl[3] = 1
        // ==========================================================

        // 3 < 5 -> result should be 1
        A = 32'h00000003; B = 32'h00000005; ALUControl = 5'b01001;
        #10;

        // 7 < 2 -> result should be 0
        A = 32'h00000007; B = 32'h00000002; ALUControl = 5'b01001;
        #10;

        // Equal values -> result should be 0
        A = 32'h00000009; B = 32'h00000009; ALUControl = 5'b01001;
        #10;

        // Negative less-than case based on subtraction sign bit
        A = 32'hFFFFFFFE; B = 32'h00000001; ALUControl = 5'b01001;
        #10;

        // ==========================================================
        // Arithmetic operation tests
        // ALUControl[1:0] = 10
        // ALUControl[3]   = 0 for ADD, 1 for SUB
        // ==========================================================

        // ADD: 5 + 7 = 12
        A = 32'h00000005; B = 32'h00000007; ALUControl = 5'b00010;
        #10;

        // ADD: 0 + 0 = 0
        A = 32'h00000000; B = 32'h00000000; ALUControl = 5'b00010;
        #10;

        // ADD: negative + positive
        A = 32'hFFFFFFFC; B = 32'h00000002; ALUControl = 5'b00010;
        #10;

        // SUB: 9 - 4 = 5
        A = 32'h00000009; B = 32'h00000004; ALUControl = 5'b01010;
```

```
        #10;

        // SUB: 4 - 9 = negative result
        A = 32'h00000004; B = 32'h00000009; ALUControl = 5'b01010;
        #10;

        // SUB: equal values -> 0
        A = 32'h0000000A; B = 32'h0000000A; ALUControl = 5'b01010;
        #10;

        // ========================================================
        // Logic operation tests
        // ALUControl[1:0] = 11
        // ALUControl[2]   = 0 for AND, 1 for OR
        // ========================================================

        // AND
        A = 32'hF0F0F0F0; B = 32'h0FF00FF0; ALUControl = 5'b00011;
        #10;

        // AND with zero
        A = 32'h12345678; B = 32'h00000000; ALUControl = 5'b00011;
        #10;

        // AND all ones
        A = 32'hFFFFFFFF; B = 32'hAAAAAAAA; ALUControl = 5'b00011;
        #10;

        // OR
        A = 32'hF0F0F0F0; B = 32'h0FF00FF0; ALUControl = 5'b00111;
        #10;

        // OR with zero
        A = 32'h12345678; B = 32'h00000000; ALUControl = 5'b00111;
        #10;

        // OR mixed pattern
        A = 32'h55555555; B = 32'hAAAAAAAA; ALUControl = 5'b00111;
        #10;

        $finish;
    end

endmodule
```

Listing 7. Arithmetic Logic Unit testbench

Time	ALUControl	A	B	ALUResult	Zero
0	00000	00000001	00000002	00000004	0
10000	00000	00000003	00000004	00000030	0
20000	00000	12345678	00000000	12345678	0
30000	10000	00000010	00000002	00000004	0
40000	10000	80000000	00000004	08000000	0
50000	10000	87654321	00000000	87654321	0
60000	01001	00000003	00000005	00000001	0
70000	01001	00000007	00000002	00000000	1
80000	01001	00000009	00000009	00000000	1
90000	01001	fffffffe	00000001	00000001	0
100000	00010	00000005	00000007	0000000c	0
110000	00010	00000000	00000000	00000000	1
120000	00010	fffffffc	00000002	fffffffe	0
130000	01010	00000009	00000004	00000005	0
140000	01010	00000004	00000009	fffffffb	0
150000	01010	0000000a	0000000a	00000000	1
160000	00011	f0f0f0f0	0ff00ff0	00f000f0	0
170000	00011	12345678	00000000	00000000	1
180000	00011	ffffffff	aaaaaaaa	aaaaaaaa	0
190000	00111	f0f0f0f0	0ff00ff0	fff0fff0	0
200000	00111	12345678	00000000	12345678	0
210000	00111	55555555	aaaaaaaa	ffffffff	0

Fig. 8. Terminal result screenshot for the Arithmetic Logic Unit module.

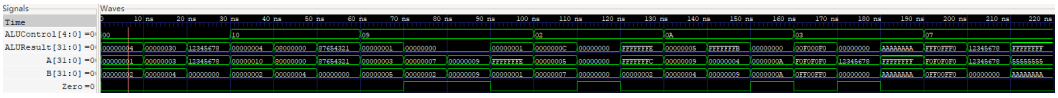

Fig. 9. GTKWave result screenshot for the Arithmetic Logic Unit module.

The analysis of the Arithmetic Logic Unit testbench is shown below.

The ALU simulation results show that the module operates correctly across all tested functional categories, including shift, arithmetic, logic, and set-less-than operations. For each ALUControl configuration, the output matches the expected result, confirming that the datapath selection and control encoding are implemented correctly.

The Zero flag is also asserted correctly when the ALU result is equal to zero, which is important for branch decision logic. In particular, branch instructions such as BLT and BGE can be supported using the SLT operation together with the Zero flag, without requiring a separate Negative signal. Overall, the ALU behaves as intended and satisfies the coursework requirements under the tested conditions.

3.2.4 Control Unit. The testbench code of the Control Unit module is shown below.

```
`timescale 1ns/1ps
`include "./SVcode/control_unit/control_unit.sv"
```

```

module control_unit_tb;

    logic [31:0] instr;
    logic        Zero;

    logic        RegWrite;
    logic [2:0]  ImmSrc;
    logic        ALUSrc;
    logic [4:0]  ALUControl;
    logic        MemWrite;
    logic [1:0]  ResultSrc;
    logic [1:0]  PCSrc;

    control_unit dut (
        .instr(instr),
        .Zero(Zero),
        .RegWrite(RegWrite),
        .ImmSrc(ImmSrc),
        .ALUSrc(ALUSrc),
        .ALUControl(ALUControl),
        .MemWrite(MemWrite),
        .ResultSrc(ResultSrc),
        .PCSrc(PCSrc)
    );

    initial begin
        $dumpfile("control_unit_tb.vcd");
        $dumpvars(0, control_unit_tb);
    end

    initial begin
        $display("Time\tinstr\t\t\tZero\tRegWrite ImmSrc ALUSrc ALUCtrl MemWrite ResultSrc PCSrc");
        $monitor("%0t\t%h\t%b\t%b\t %b\t   %b\t   %b\t   %b\t    %b\t %b",
                 $time, instr, Zero, RegWrite, ImmSrc, ALUSrc, ALUControl,
                 MemWrite, ResultSrc, PCSrc);

        // ==========================================================
        // R-type instruction tests
        // ==========================================================

        // add  x1, x2, x3
        instr = 32'b0000000_00011_00010_000_00001_0110011; Zero = 0;
        #10;

        // sub  x1, x2, x3
        instr = 32'b0100000_00011_00010_000_00001_0110011; Zero = 0;
        #10;

```

```
        // or   x1, x2, x3
        instr = 32'b0000000_00011_00010_110_00001_0110011; Zero = 0;
        #10;

        // and  x1, x2, x3
        instr = 32'b0000000_00011_00010_111_00001_0110011; Zero = 0;
        #10;

        // sll  x1, x2, x3
        instr = 32'b0000000_00011_00010_001_00001_0110011; Zero = 0;
        #10;

        // srl  x1, x2, x3
        instr = 32'b0000000_00011_00010_101_00001_0110011; Zero = 0;
        #10;

        // slt  x1, x2, x3
        instr = 32'b0000000_00011_00010_010_00001_0110011; Zero = 0;
        #10;

        // ==========================================================
        // I-type arithmetic instruction tests
        // ==========================================================

        // addi x1, x2, 5
        instr = 32'b000000000101_00010_000_00001_0010011; Zero = 0;
        #10;

        // ori  x1, x2, 5
        instr = 32'b000000000101_00010_110_00001_0010011; Zero = 0;
        #10;

        // andi x1, x2, 5
        instr = 32'b000000000101_00010_111_00001_0010011; Zero = 0;
        #10;

        // slli x1, x2, 3
        instr = 32'b0000000_00011_00010_001_00001_0010011; Zero = 0;
        #10;

        // srli x1, x2, 3
        instr = 32'b0000000_00011_00010_101_00001_0010011; Zero = 0;
        #10;

        // slti x1, x2, 5
        instr = 32'b000000000101_00010_010_00001_0010011; Zero = 0;
        #10;

        // ==========================================================
        // Memory access instruction tests
        // ==========================================================

```

```
        // lw x1, 8(x2)
        instr = 32'b000000001000_00010_010_00001_0000011; Zero = 0;
        #10;

        // sw x3, 8(x2)
        instr = 32'b0000000_00011_00010_010_01000_0100011; Zero = 0;
        #10;

        // ==========================================================
        // Branch instruction tests
        // ==========================================================

        // beq taken
        instr = 32'b0000000_00011_00010_000_01000_1100011; Zero = 1;
        #10;

        // beq not taken
        instr = 32'b0000000_00011_00010_000_01000_1100011; Zero = 0;
        #10;

        // bne taken
        instr = 32'b0000000_00011_00010_001_01000_1100011; Zero = 0;
        #10;

        // bne not taken
        instr = 32'b0000000_00011_00010_001_01000_1100011; Zero = 1;
        #10;

        // blt taken (using slt + ~Zero)
        instr = 32'b0000000_00011_00010_100_01000_1100011; Zero = 0;
        #10;

        // blt not taken
        instr = 32'b0000000_00011_00010_100_01000_1100011; Zero = 1;
        #10;

        // bge taken (using slt + Zero)
        instr = 32'b0000000_00011_00010_101_01000_1100011; Zero = 1;
        #10;

        // bge not taken
        instr = 32'b0000000_00011_00010_101_01000_1100011; Zero = 0;
        #10;

        // ==========================================================
        // Jump instruction tests
        // ==========================================================

        // jal x1, offset
        instr = 32'b0_0000001010_1_00000000_00001_1101111; Zero = 0;
        #10;

```

```
        // jalr x1, x2, 4
        instr = 32'b000000000100_00010_000_00001_1100111; Zero = 0;
        #10;

        // ==========================================================
        // U-type instruction test
        // ==========================================================

        // lui x1, 0x12345
        instr = 32'b00010010001101000101_00001_0110111; Zero = 0;
        #10;

        $finish;
    end

endmodule
```

Listing 8. Control Unit testbench

Time	instr		Zero	RegWrite	ImmSrc	ALUSrc	ALUCtrl	MemWrite	ResultSrc	PCSrc
0	003100b3	0	1	000	0	00010		0	01	00
10000	403100b3	0	1	000	0	01010		0	01	00
20000	003160b3	0	1	000	0	00111		0	01	00
30000	003170b3	0	1	000	0	00011		0	01	00
40000	003110b3	0	1	000	0	00000		0	01	00
50000	003150b3	0	1	000	0	10000		0	01	00
60000	003120b3	0	1	000	0	01001		0	01	00
70000	00510093	0	1	000	1	00010		0	01	00
80000	00516093	0	1	000	1	00111		0	01	00
90000	00517093	0	1	000	1	00011		0	01	00
100000	00311093	0	1	000	1	00000		0	01	00
110000	00315093	0	1	000	1	10000		0	01	00
120000	00512093	0	1	000	1	01001		0	01	00
130000	00812083	0	1	000	1	00010		0	10	00
140000	00312423	0	0	001	1	00010		1	00	00
150000	00310463	1	0	010	0	01010		0	00	01
160000	00310463	0	0	010	0	01010		0	00	00
170000	00311463	0	0	010	0	01010		0	00	01
180000	00311463	1	0	010	0	01010		0	00	00
190000	00314463	0	0	010	0	01001		0	00	01
200000	00314463	1	0	010	0	01001		0	00	00
210000	00315463	1	0	010	0	01001		0	00	01
220000	00315463	0	0	010	0	01001		0	00	00
230000	015000ef	0	1	100	0	00000		0	11	01
240000	004100e7	0	1	000	1	00010		0	11	10
250000	123450b7	0	1	011	0	00000		0	00	00

Fig. 10. Terminal result screenshot for the Control Unit module.

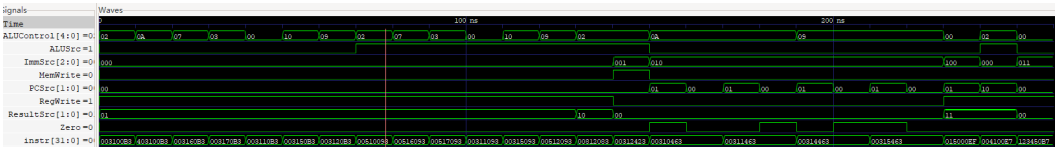

Fig. 11. GTKWave result screenshot for the Control Unit module.

The analysis of the Control Unit testbench is shown below.

The testbench results show that the Control Unit generates the correct control signals for all required RV32I instructions. The outputs for RegWrite, ImmSrc, ALUSrc, ALUControl, MemWrite, ResultSrc, and PCSrc are all consistent with the designed control table.

In particular, branch instructions are handled correctly through the interaction between the Zero flag and the PCSrc selection logic. The BLT and BGE instructions also operate properly by using the SLT-based comparison together with Zero. Although some don't-care fields are assigned fixed values during simulation, they do not affect the functionality of the processor. Overall, the Control Unit meets the coursework requirements and behaves correctly in the tested scenarios.

4 Task1.4

4.1 riscv code

The SystemVerilog implementation of the top-level RISC-V processor is shown below.

```
`include "./SVcode/instruction_memory.sv"
`include "./SVcode/reg_file.sv"
`include "./SVcode/data_memory_and_io.sv"
`include "./SVcode/pc/pc.sv"
`include "./SVcode/extend/extend.sv"
`include "./SVcode/alu/alu.sv"
`include "./SVcode/control_unit/control_unit.sv"

module risc_v (
    input  logic        CLK,
    input  logic        reset,
    input  logic [31:0] CPUIn,
    output logic [31:0] CPUOut
);

    logic [31:0] PC;
    logic [31:0] PCNext;
    logic [31:0] PCPlus4;
    logic [31:0] PCTarget;
    logic [31:0] Instr;
    logic [31:0] RD1;
    logic [31:0] RD2;
    logic [31:0] ImmExt;
    logic [31:0] SrcB;
    logic [31:0] ALUResult;
    logic [31:0] ReadData;
    logic [31:0] Result;
    logic        Zero;

```

```
    logic        RegWrite;
    logic [2:0]  ImmSrc;
    logic        ALUSrc;
    logic [4:0]  ALUControl;
    logic        MemWrite;
    logic [1:0]  ResultSrc;
    logic [1:0]  PCSrc;

    assign PCPlus4  = PC + 32'd4;
    assign PCTarget = PC + ImmExt;
    assign SrcB     = ALUSrc ? ImmExt : RD2;

    always_comb begin
        case (ResultSrc)
            2'b00:   Result = ImmExt;
            2'b01:   Result = ALUResult;
            2'b10:   Result = ReadData;
            2'b11:   Result = PCPlus4;
            default: Result = 32'h00000000;
        endcase
    end

    always_comb begin
        case (PCSrc)
            2'b00:   PCNext = PCPlus4;
            2'b01:   PCNext = PCTarget;
            2'b10:   PCNext = ALUResult;
            default: PCNext = PCPlus4;
        endcase
    end

    program_counter u_pc (
        .CLK(CLK),
        .reset(reset),
        .PCNext(PCNext),
        .PC(PC)
    );

    instruction_memory u_instruction_memory (
        .Instr(Instr),
        .PC(PC)
    );

    control_unit u_control_unit (
        .instr(Instr),
        .Zero(Zero),
        .RegWrite(RegWrite),
        .ImmSrc(ImmSrc),
        .ALUSrc(ALUSrc),
        .ALUControl(ALUControl),
        .MemWrite(MemWrite),
        .ResultSrc(ResultSrc),
```

```
        .PCSrc(PCSrc)
    );

    reg_file u_reg_file (
        .RD1(RD1),
        .RD2(RD2),
        .WD3(Result),
        .A1(Instr[19:15]),
        .A2(Instr[24:20]),
        .A3(Instr[11:7]),
        .WE3(RegWrite),
        .CLK(CLK)
    );

    extend u_extend (
        .Instr(Instr),
        .ImmSrc(ImmSrc),
        .ImmExt(ImmExt)
    );

    alu u_alu (
        .A(RD1),
        .B(SrcB),
        .ALUControl(ALUControl),
        .ALUResult(ALUResult),
        .Zero(Zero)
    );

    data_memory_and_io u_data_memory_and_io (
        .RD(ReadData),
        .CPUOut(CPUOut),
        .A(ALUResult),
        .WD(RD2),
        .CPUIn(CPUIn),
        .WE(MemWrite),
        .CLK(CLK)
    );

endmodule
```

Listing 9. Top-level RISC-V module

4.2 program.txt convert

4.2.1 Disassembly of `program`. The machine code stored in `program.txt` can be disassembled into the following RISC-V assembly instructions:

0x00000000:	03200093	addi x1, x0, 50
0x00000004:	80000537	lui x10, 0x80000
0x00000008:	ffc52103	lw x2, -4(x10)
0x0000000C:	402081b3	sub x3, x1, x2
0x00000010:	fe352e23	sw x3, -4(x10)
0x00000014:	00000063	beq x0, x0, 0

4.2.2 Method for Decoding Machine Code. Each instruction is 32 bits wide. The lowest 7 bits (`instr[6:0]`) define the opcode, which determines the instruction format. Once the format is identified, the remaining fields are extracted from fixed bit positions.

The relevant field mappings are summarised below:

R-type.

- opcode = instr[6:0]
- rd = instr[11:7]
- funct3 = instr[14:12]
- rs1 = instr[19:15]
- rs2 = instr[24:20]
- funct7 = instr[31:25]

I-type.

- opcode = instr[6:0]
- rd = instr[11:7]
- funct3 = instr[14:12]
- rs1 = instr[19:15]
- imm[11:0] = instr[31:20]

S-type.

- opcode = instr[6:0]
- imm[4:0] = instr[11:7]
- funct3 = instr[14:12]
- rs1 = instr[19:15]
- rs2 = instr[24:20]
- imm[11:5] = instr[31:25]

B-type.

- opcode = instr[6:0]
- imm = sign-extended {instr[31], instr[7], instr[30:25], instr[11:8], 1'b0}

U-type.

- opcode = instr[6:0]
- rd = instr[11:7]
- imm[31:12] = instr[31:12]

4.2.3 Step-by-Step Decoding. Each instruction is decoded as follows:

Instruction 1: 03200093. Opcode `0010011` indicates an I-type arithmetic instruction. `funct3 = 000` corresponds to `addi`. Thus, the instruction is:

```
addi x1, x0, 50
```

Instruction 2: 80000537. Opcode `0110111` indicates a U-type instruction (`lui`). The immediate value is shifted left by 12 bits:

$$\texttt{lui x10, 0x80000} \Rightarrow x10 = 0x80000000$$

Instruction 3: ffc52103. Opcode `0000011` indicates a load instruction. `funct3 = 010` selects `lw`. The immediate `0xFFC` is sign-extended to −4, giving:

```
lw x2, -4(x10)
```

Instruction 4: 402081b3. Opcode `0110011` indicates an R-type instruction. `funct7 = 0100000` selects subtraction:

```
sub x3, x1, x2
```

Instruction 5: fe352e23. Opcode `0100011` indicates an S-type instruction. The immediate is reconstructed and sign-extended to −4:

```
sw x3, -4(x10)
```

Instruction 6: 00000063. Opcode `1100011` indicates a branch instruction. `funct3 = 000` corresponds to `beq`. Since both operands are `x0`, the condition is always true:

```
beq x0, x0, 0
```

This results in an infinite loop.

4.2.4 Expected Behaviour. The program constructs the address:

$$0x80000000 - 4 = 0x7FFFFFFC$$

This corresponds to the memory-mapped I/O address used by the `data_memory_and_io` module. The program performs the following steps:

(1) Load the constant 50 into `x1`
(2) Read `CPUIn` from address `0x7FFFFFFC` into `x2`
(3) Compute `x3 = 50 - CPUIn`
(4) Write `x3` to `CPUOut` via a store instruction
(5) Enter an infinite loop using `beq x0, x0, 0`

For the default testbench input `CPUIn = 20`, the expected output is:

```
CPUOut = 30
```

4.3 riscv testbench code

The testbench code of the top-level RISC-V processor is shown below.

```
`timescale 1ns/1ps
`include "./SVcode/risc_v/risc_v.sv"

module risc_v_tb;

    logic        CLK;
    logic        reset;
    logic [31:0] CPUIn;
    logic [31:0] CPUOut;

    risc_v dut (
        .CLK(CLK),
        .reset(reset),
        .CPUIn(CPUIn),
        .CPUOut(CPUOut)
    );

    initial begin
        CLK = 1'b0;
        forever #5 CLK = ~CLK;
    end
```

```

    initial begin
        $dumpfile("risc_v_tb.vcd");
        $dumpvars(0, risc_v_tb);

        $dumpvars(0, risc_v_tb.dut.u_reg_file.RF[1]);
        $dumpvars(0, risc_v_tb.dut.u_reg_file.RF[2]);
        $dumpvars(0, risc_v_tb.dut.u_reg_file.RF[3]);

        reset = 1'b1;
        CPUIn = 32'd20;

        #12;
        reset = 1'b0;

        #2000;
        $finish;
    end

    initial begin
        $monitor(
            "t=%0t reset=%b PC=%h Instr=%h CPUIn=%h CPUOut=%h Result=%h
                ALUResult=%h x1=%h x2=%h x3=%h",
            $time,
            reset,
            dut.PC,
            dut.Instr,
            CPUIn,
            CPUOut,
            dut.Result,
            dut.ALUResult,
            dut.u_reg_file.RF[1],
            dut.u_reg_file.RF[2],
            dut.u_reg_file.RF[3]
        );
    end

endmodule
```

Listing 10. RISC-V testbench

4.4 terminal result screenshot

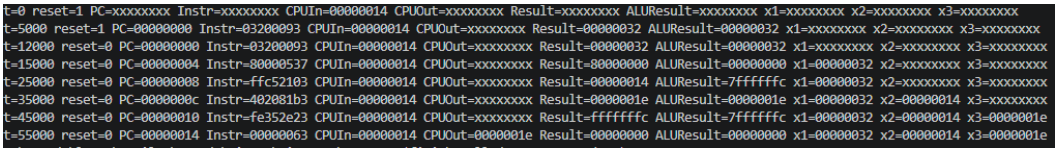

```
t=0 reset=1 PC=xxxxxxxx Instr=xxxxxxxx CPUIn=00000014 CPUOut=xxxxxxxx Result=xxxxxxxx ALUResult=xxxxxxxx x1=xxxxxxxx x2=xxxxxxxx x3=xxxxxxxx
t=5000 reset=1 PC=00000000 Instr=03200093 CPUIn=00000014 CPUOut=xxxxxxxx Result=00000032 ALUResult=00000032 x1=xxxxxxxx x2=xxxxxxxx x3=xxxxxxxx
t=12000 reset=0 PC=00000000 Instr=03200093 CPUIn=00000014 CPUOut=xxxxxxxx Result=00000032 ALUResult=00000032 x1=xxxxxxxx x2=xxxxxxxx x3=xxxxxxxx
t=15000 reset=0 PC=00000004 Instr=80000537 CPUIn=00000014 CPUOut=xxxxxxxx Result=80000000 ALUResult=00000000 x1=00000032 x2=xxxxxxxx x3=xxxxxxxx
t=25000 reset=0 PC=00000008 Instr=ffc52103 CPUIn=00000014 CPUOut=xxxxxxxx Result=00000014 ALUResult=7ffffffc x1=00000032 x2=xxxxxxxx x3=xxxxxxxx
t=35000 reset=0 PC=0000000c Instr=402081b3 CPUIn=00000014 CPUOut=xxxxxxxx Result=0000001e ALUResult=0000001e x1=00000032 x2=00000014 x3=xxxxxxxx
t=45000 reset=0 PC=00000010 Instr=fe352e23 CPUIn=00000014 CPUOut=xxxxxxxx Result=fffffffc ALUResult=7ffffffc x1=00000032 x2=00000014 x3=0000001e
t=55000 reset=0 PC=00000014 Instr=00000063 CPUIn=00000014 CPUOut=0000001e Result=00000000 ALUResult=00000000 x1=00000032 x2=00000014 x3=0000001e
```

Fig. 12. Terminal result screenshot for the top-level RISC-V simulation.

4.5 gtkwave result screenshot

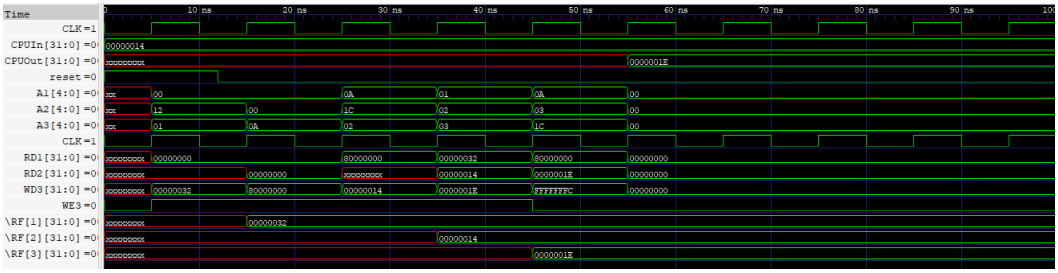

Fig. 13. GTKWave result screenshot for the top-level RISC-V simulation.

4.6 result analyze

The simulation result is correct. The processor successfully executes the program in program.txt, reads the memory-mapped input value CPUIn = 20 from address 0x7FFFFFFC, computes 50 - 20 = 30, and writes the result 0x0000001E to CPUOut. The final beq x0, x0, 0 instruction then causes the processor to loop indefinitely at the same instruction address.

5 Task1.5

5.1 Introduction to the Test Program

This program is a comprehensive test routine designed to verify the correct functionality of a single-cycle RISC-V processor implementation. It begins by constructing the memory-mapped I/O address (`0x7FFFFFFC`) and storing it in register `x31`, which is used to output results through store instructions.

The program then sequentially tests a range of arithmetic, logical, and shift operations, including `addi`, `add`, `sub`, `or`, `sll`, and `slt`, by performing computations on predefined register values and writing the results to the output port.

Next, it evaluates immediate-type instructions such as `andi`, `srli`, and `slti`, ensuring that immediate decoding and sign extension are correctly implemented. Memory access functionality is also verified using `sw` and `lw` instructions, confirming that data can be stored to and retrieved from memory correctly.

The program further tests branch instructions (`beq`, `bne`, `blt`, `bge`) by checking both taken and not-taken conditions, ensuring proper control flow. Finally, it validates jump instructions (`jal` and `jalr`), including correct link register updates and indirect jumps.

Overall, the program systematically exercises all supported instructions and verifies both datapath and control logic correctness.

5.2 Terminal Result Screenshot of the Self-Designed RISC-V Processor

```
t=0 reset=1 PC=xxxxxxxx Instr=xxxxxxxx CPUIn=00000014 CPUOut=xxxxxxxx Result=xxxxxxxx ALUResult=xxxxxxxx x1=xxxxxxxx x2=xxxxxxxx x3=xxxxxxxx
t=5000 reset=1 PC=00000000 Instr=80000fb7 CPUIn=00000014 CPUOut=xxxxxxxx Result=80000000 ALUResult=00000000 x1=xxxxxxxx x2=xxxxxxxx x3=xxxxxxxx
t=12000 reset=0 PC=00000000 Instr=80000fb7 CPUIn=00000014 CPUOut=xxxxxxxx Result=80000000 ALUResult=00000000 x1=xxxxxxxx x2=xxxxxxxx x3=xxxxxxxx
t=15000 reset=0 PC=00000004 Instr=ffcf8f93 CPUIn=00000014 CPUOut=xxxxxxxx Result=7ffffffc ALUResult=7ffffffc x1=xxxxxxxx x2=xxxxxxxx x3=xxxxxxxx
t=25000 reset=0 PC=00000008 Instr=08000093 CPUIn=00000014 CPUOut=xxxxxxxx Result=00000080 ALUResult=00000080 x1=xxxxxxxx x2=xxxxxxxx x3=xxxxxxxx
t=35000 reset=0 PC=0000000c Instr=001fa023 CPUIn=00000014 CPUOut=xxxxxxxx Result=00000000 ALUResult=7ffffffc x1=00000080 x2=xxxxxxxx x3=xxxxxxxx
t=45000 reset=0 PC=00000010 Instr=00100093 CPUIn=00000014 CPUOut=00000080 Result=00000001 ALUResult=00000001 x1=00000080 x2=xxxxxxxx x3=xxxxxxxx
t=55000 reset=0 PC=00000014 Instr=00300113 CPUIn=00000014 CPUOut=00000080 Result=00000003 ALUResult=00000003 x1=00000001 x2=xxxxxxxx x3=xxxxxxxx
t=65000 reset=0 PC=00000018 Instr=002081b3 CPUIn=00000014 CPUOut=00000080 Result=00000004 ALUResult=00000004 x1=00000001 x2=00000003 x3=xxxxxxxx
t=75000 reset=0 PC=0000001c Instr=003fa023 CPUIn=00000014 CPUOut=00000080 Result=00000000 ALUResult=7ffffffc x1=00000001 x2=00000003 x3=00000004
t=85000 reset=0 PC=00000020 Instr=402081b3 CPUIn=00000014 CPUOut=00000004 Result=fffffffe ALUResult=fffffffe x1=00000001 x2=00000003 x3=00000004
t=95000 reset=0 PC=00000024 Instr=003fa023 CPUIn=00000014 CPUOut=00000004 Result=00000000 ALUResult=7ffffffc x1=00000001 x2=00000003 x3=fffffffe
t=105000 reset=0 PC=00000028 Instr=0020e1b3 CPUIn=00000014 CPUOut=fffffffe Result=00000003 ALUResult=00000003 x1=00000001 x2=00000003 x3=fffffffe
t=115000 reset=0 PC=0000002c Instr=003fa023 CPUIn=00000014 CPUOut=fffffffe Result=00000000 ALUResult=7ffffffc x1=00000001 x2=00000003 x3=00000003
t=125000 reset=0 PC=00000030 Instr=002091b3 CPUIn=00000014 CPUOut=00000003 Result=00000008 ALUResult=00000008 x1=00000001 x2=00000003 x3=00000003
t=135000 reset=0 PC=00000034 Instr=003fa023 CPUIn=00000014 CPUOut=00000003 Result=00000000 ALUResult=7ffffffc x1=00000001 x2=00000003 x3=00000008
t=145000 reset=0 PC=00000038 Instr=0020a1b3 CPUIn=00000014 CPUOut=00000008 Result=00000001 ALUResult=00000001 x1=00000001 x2=00000003 x3=00000008
t=155000 reset=0 PC=0000003c Instr=003fa023 CPUIn=00000014 CPUOut=00000008 Result=00000000 ALUResult=7ffffffc x1=00000001 x2=00000003 x3=00000001
t=165000 reset=0 PC=00000040 Instr=00717193 CPUIn=00000014 CPUOut=00000001 Result=00000003 ALUResult=00000003 x1=00000001 x2=00000003 x3=00000001
t=175000 reset=0 PC=00000044 Instr=003fa023 CPUIn=00000014 CPUOut=00000001 Result=00000000 ALUResult=7ffffffc x1=00000001 x2=00000003 x3=00000003
t=185000 reset=0 PC=00000048 Instr=00115193 CPUIn=00000014 CPUOut=00000003 Result=00000001 ALUResult=00000001 x1=00000001 x2=00000003 x3=00000003
t=195000 reset=0 PC=0000004c Instr=003fa023 CPUIn=00000014 CPUOut=00000003 Result=00000000 ALUResult=7ffffffc x1=00000001 x2=00000003 x3=00000001
t=205000 reset=0 PC=00000050 Instr=fff0a193 CPUIn=00000014 CPUOut=00000001 Result=00000000 ALUResult=00000000 x1=00000001 x2=00000003 x3=00000001
t=215000 reset=0 PC=00000054 Instr=003fa023 CPUIn=00000014 CPUOut=00000001 Result=00000000 ALUResult=7ffffffc x1=00000001 x2=00000003 x3=00000000
t=225000 reset=0 PC=00000058 Instr=00202023 CPUIn=00000014 CPUOut=00000000 Result=00000000 ALUResult=00000000 x1=00000001 x2=00000003 x3=00000000
t=235000 reset=0 PC=0000005c Instr=00002183 CPUIn=00000014 CPUOut=00000000 Result=00000003 ALUResult=00000000 x1=00000001 x2=00000003 x3=00000000
t=245000 reset=0 PC=00000060 Instr=003fa023 CPUIn=00000014 CPUOut=00000000 Result=00000000 ALUResult=7ffffffc x1=00000001 x2=00000003 x3=00000003
t=255000 reset=0 PC=00000064 Instr=00208063 CPUIn=00000014 CPUOut=00000003 Result=00000000 ALUResult=fffffffe x1=00000001 x2=00000003 x3=00000003
t=265000 reset=0 PC=00000068 Instr=00209663 CPUIn=00000014 CPUOut=00000003 Result=0000000c ALUResult=fffffffe x1=00000001 x2=00000003 x3=00000003
t=275000 reset=0 PC=00000074 Instr=00114063 CPUIn=00000014 CPUOut=00000003 Result=00000000 ALUResult=00000000 x1=00000001 x2=00000003 x3=00000003
t=285000 reset=0 PC=00000078 Instr=00115663 CPUIn=00000014 CPUOut=00000003 Result=0000000c ALUResult=00000000 x1=00000001 x2=00000003 x3=00000003
t=295000 reset=0 PC=00000084 Instr=0100026f CPUIn=00000014 CPUOut=00000003 Result=00000088 ALUResult=xxxxxxxx x1=00000001 x2=00000003 x3=00000003
t=305000 reset=0 PC=00000094 Instr=11100193 CPUIn=00000014 CPUOut=00000003 Result=00000111 ALUResult=00000111 x1=00000001 x2=00000003 x3=00000003
t=315000 reset=0 PC=00000098 Instr=003fa023 CPUIn=00000014 CPUOut=00000003 Result=00000000 ALUResult=7ffffffc x1=00000001 x2=00000003 x3=00000111
t=325000 reset=0 PC=0000009c Instr=00020067 CPUIn=00000014 CPUOut=00000111 Result=000000a0 ALUResult=00000088 x1=00000001 x2=00000003 x3=00000111
t=335000 reset=0 PC=00000088 Instr=78900193 CPUIn=00000014 CPUOut=00000111 Result=00000789 ALUResult=00000789 x1=00000001 x2=00000003 x3=00000111
t=345000 reset=0 PC=0000008c Instr=003fa023 CPUIn=00000014 CPUOut=00000111 Result=00000000 ALUResult=7ffffffc x1=00000001 x2=00000003 x3=00000789
t=355000 reset=0 PC=00000090 Instr=0100006f CPUIn=00000014 CPUOut=00000789 Result=00000094 ALUResult=xxxxxxxx x1=00000001 x2=00000003 x3=00000789
t=365000 reset=0 PC=000000a0 Instr=xxxxxxxx CPUIn=00000014 CPUOut=00000789 Result=xxxxxxxx ALUResult=xxxxxxxx x1=00000001 x2=00000003 x3=00000789
t=375000 reset=0 PC=000000a4 Instr=xxxxxxxx CPUIn=00000014 CPUOut=00000789 Result=xxxxxxxx ALUResult=xxxxxxxx x1=00000001 x2=00000003 x3=00000789
t=385000 reset=0 PC=000000a8 Instr=xxxxxxxx CPUIn=00000014 CPUOut=00000789 Result=xxxxxxxx ALUResult=xxxxxxxx x1=00000001 x2=00000003 x3=00000789
t=395000 reset=0 PC=000000ac Instr=xxxxxxxx CPUIn=00000014 CPUOut=00000789 Result=xxxxxxxx ALUResult=xxxxxxxx x1=00000001 x2=00000003 x3=00000789
t=405000 reset=0 PC=000000b0 Instr=xxxxxxxx CPUIn=00000014 CPUOut=00000789 Result=xxxxxxxx ALUResult=xxxxxxxx x1=00000001 x2=00000003 x3=00000789
t=415000 reset=0 PC=000000b4 Instr=xxxxxxxx CPUIn=00000014 CPUOut=00000789 Result=xxxxxxxx ALUResult=xxxxxxxx x1=00000001 x2=00000003 x3=00000789
t=425000 reset=0 PC=000000b8 Instr=xxxxxxxx CPUIn=00000014 CPUOut=00000789 Result=xxxxxxxx ALUResult=xxxxxxxx x1=00000001 x2=00000003 x3=00000789
t=435000 reset=0 PC=000000bc Instr=xxxxxxxx CPUIn=00000014 CPUOut=00000789 Result=xxxxxxxx ALUResult=xxxxxxxx x1=00000001 x2=00000003 x3=00000789
```

Fig. 14. Terminal result screenshot for the self-designed RISC-V processor running the test program.

5.3 GTKWave Result Screenshot of the Self-Designed RISC-V Processor

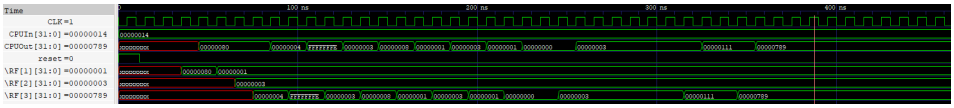

Fig. 15. GTKWave result screenshot for the self-designed RISC-V processor running the test program.

5.4 Results from the Online RISC-V Simulator

Init Value	Register	Decimal	Hex	Binary
0	x0 (zero)	0	0x00000000	0b00000000000000000000000000000000
0	x1 (ra)	1	0x00000001	0b00000000000000000000000000000001
0	x2 (sp)	3	0x00000003	0b00000000000000000000000000000011
0	x3 (gp)	1929	0x00000789	0b00000000000000000000011110001001
0	x4 (tp)	136	0x00000088	0b00000000000000000000000010001000
0	x5 (t0)	0	0x00000000	0b00000000000000000000000000000000

Fig. 16. Online RISC-V simulator result screenshot 1.

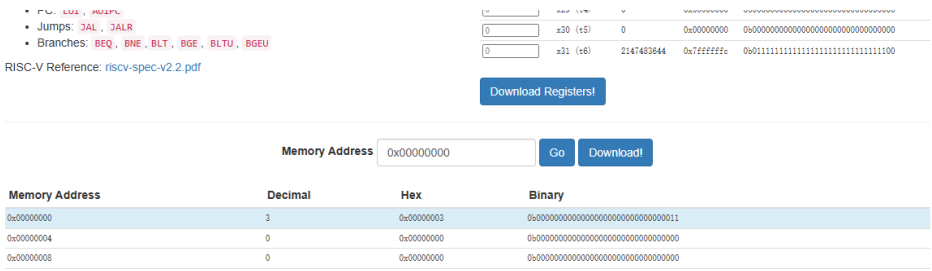

Fig. 17. Online RISC-V simulator result screenshot 2.

5.5 Result Analysis

The simulation results from the implemented RISC-V processor are consistent with the expected behaviour and match those obtained from the reference simulator. The output sequence observed on `CPUOut` correctly reflects the execution of each instruction in the test program. Arithmetic and logical operations such as `add`, `sub`, `or`, `sll`, and `slt` produce the expected results, confirming correct ALU functionality.

Immediate instructions including `andi`, `srli`, and `slti` also behave correctly, indicating proper immediate decoding and sign extension. Memory operations are validated by storing and reloading values, demonstrating correct data memory access. Branch instructions correctly control program flow, as instructions in non-taken paths are skipped. Finally, the correct output value `0x00000789` confirms that both `jal` and `jalr` perform accurate control transfer and link register updates.

Overall, the results verify that both the datapath and control unit operate correctly across all tested instructions.