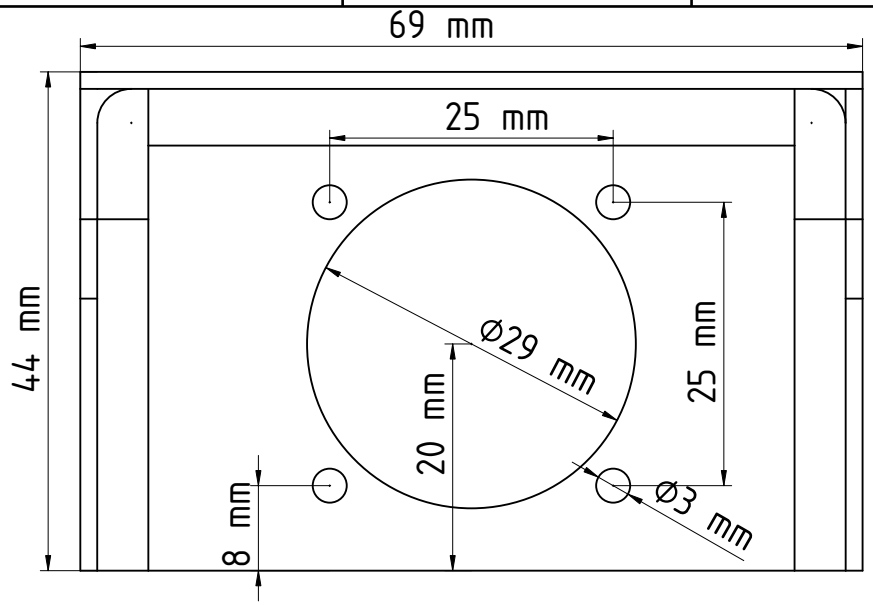

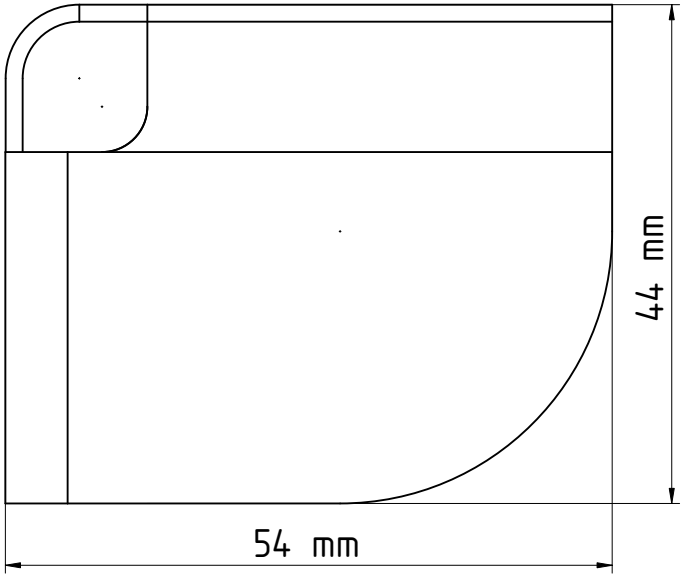

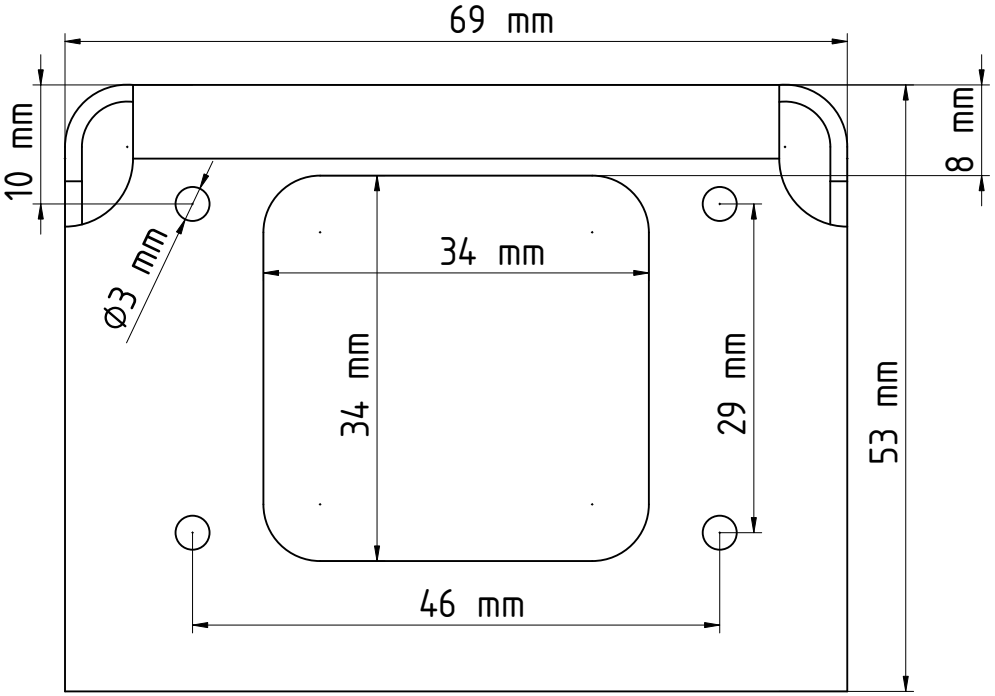

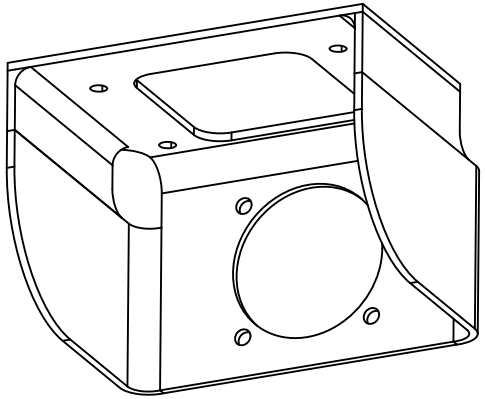

DESIGNED BY: JC Carré DATE: 23/06/2021		équerre adaptation etrudeur	
SIZE A4			
SCALE 3:2	WEIGHT (kg)	DRAWING NUMBER 1/2	SHEET 1/2

This drawing is our property; it can't be reproduced or communicated without our written consent.

G	_
F	_
E	_
D	_
C	_
B	_
A	_