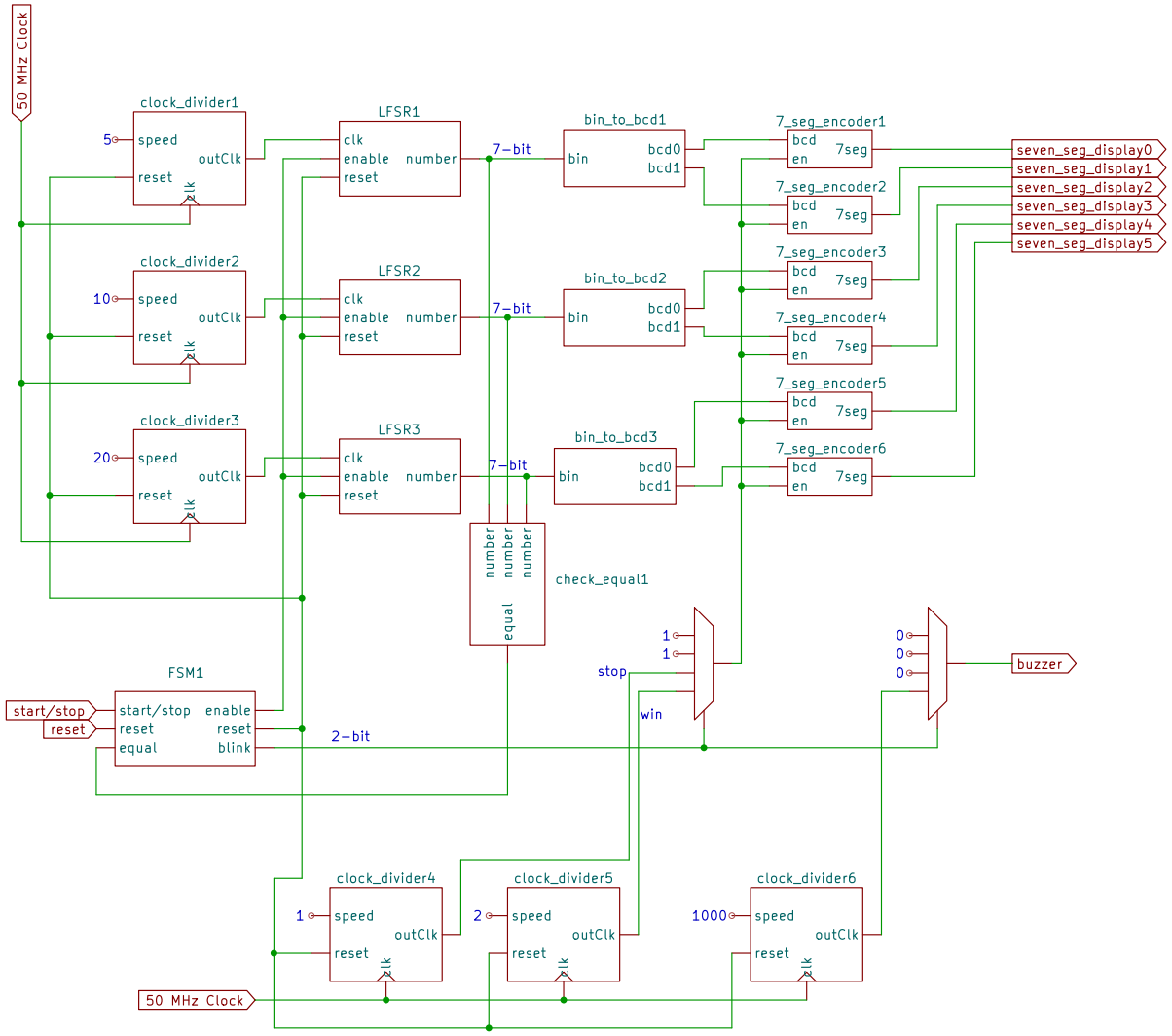

Sheet: /
File: slot-machine.kicad_sch

Title: Slot Machine

Size: A4	Date: 2025-01-01	**Rev: 1.0**
KiCad E.D.A. 8.0.7		Id: 1/1