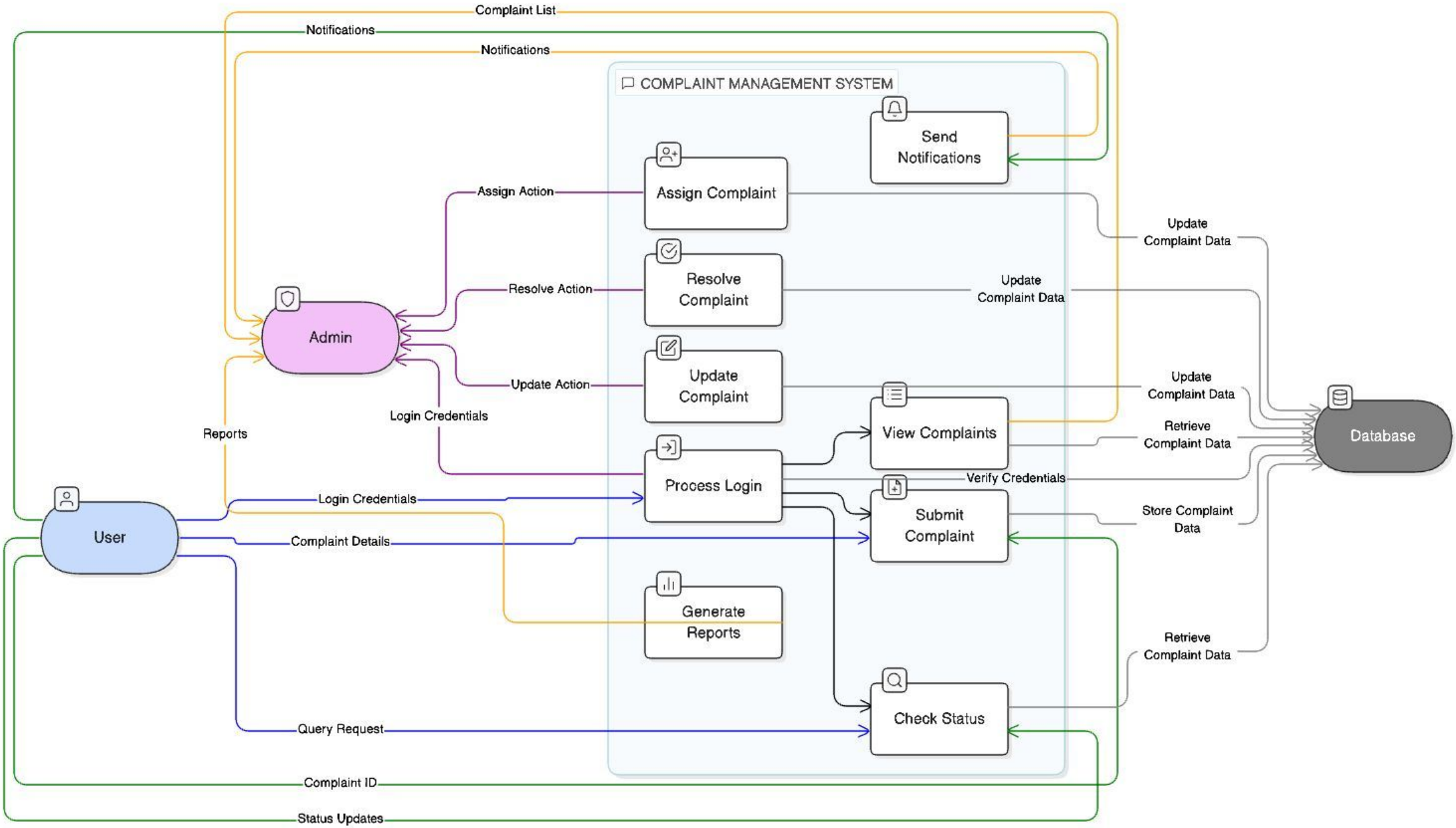

Data Flow Diagram Level 0

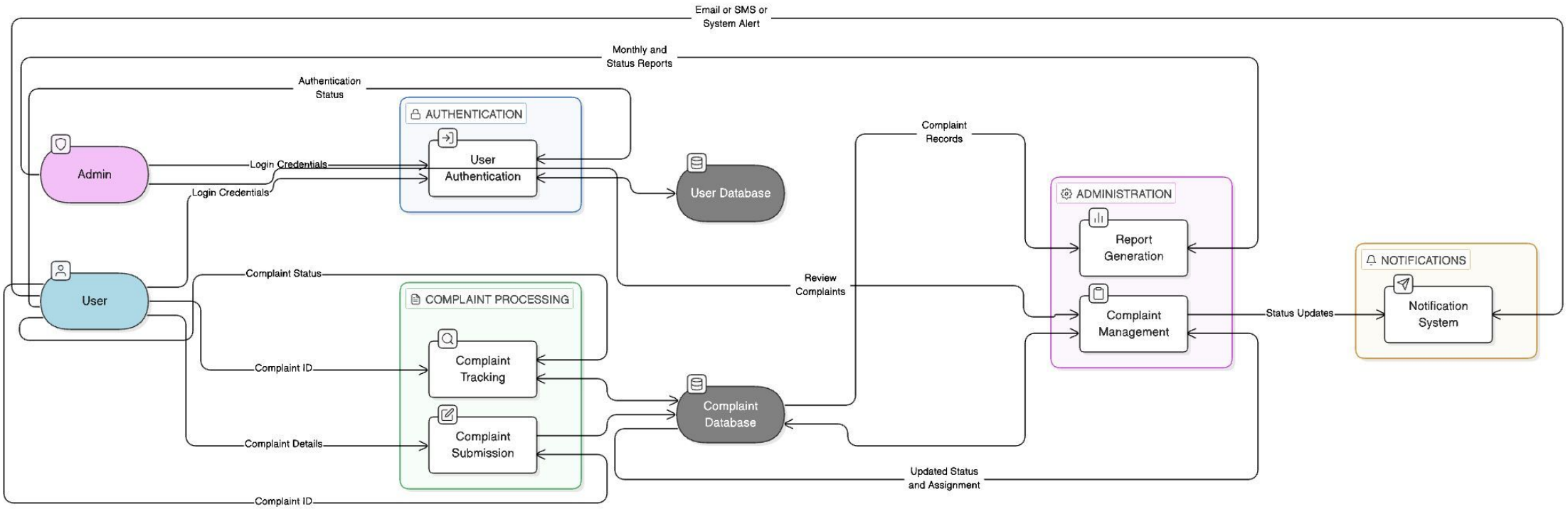

Data Flow Diagram Level 1

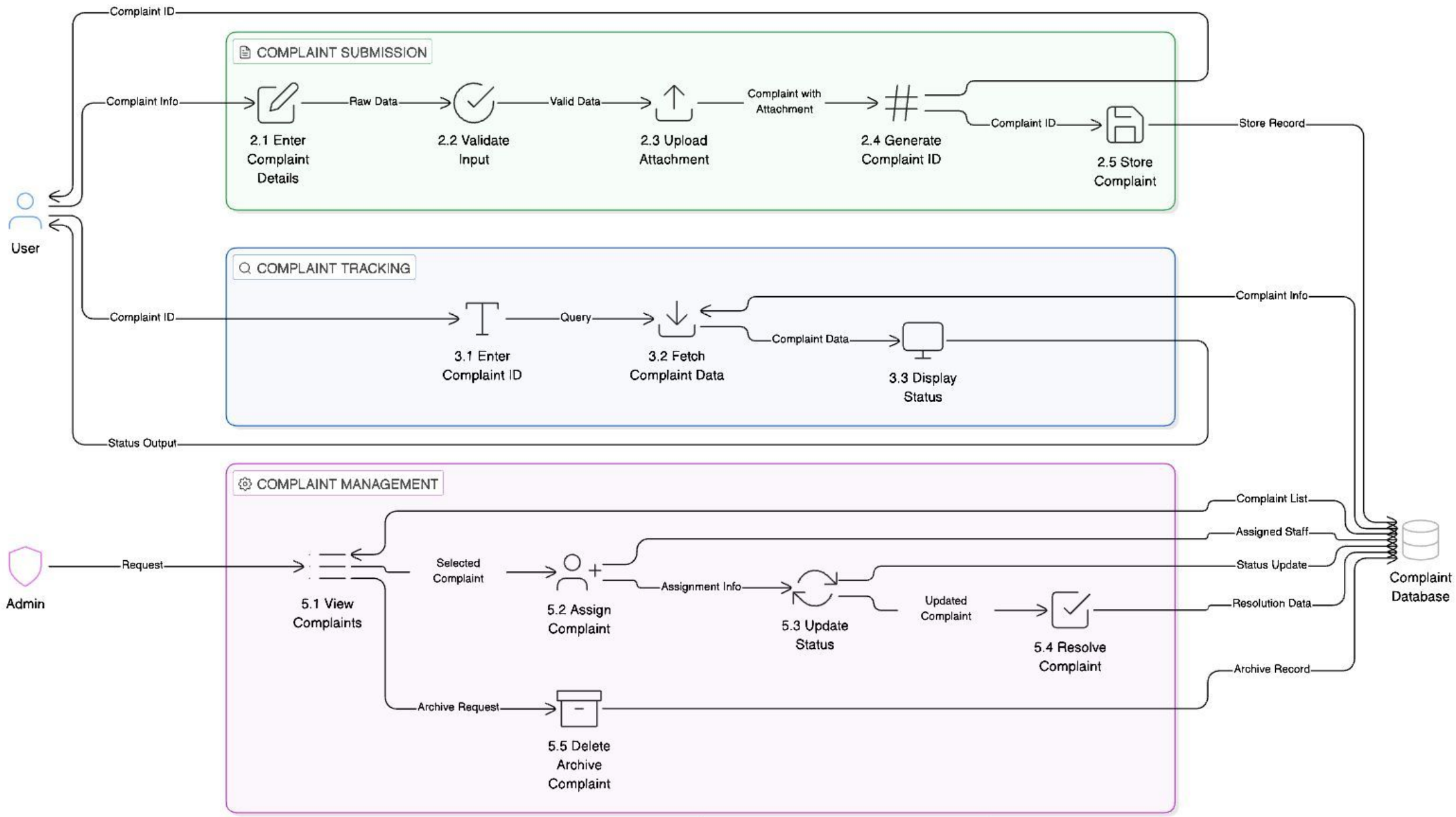

Data Flow Diagram Level 2