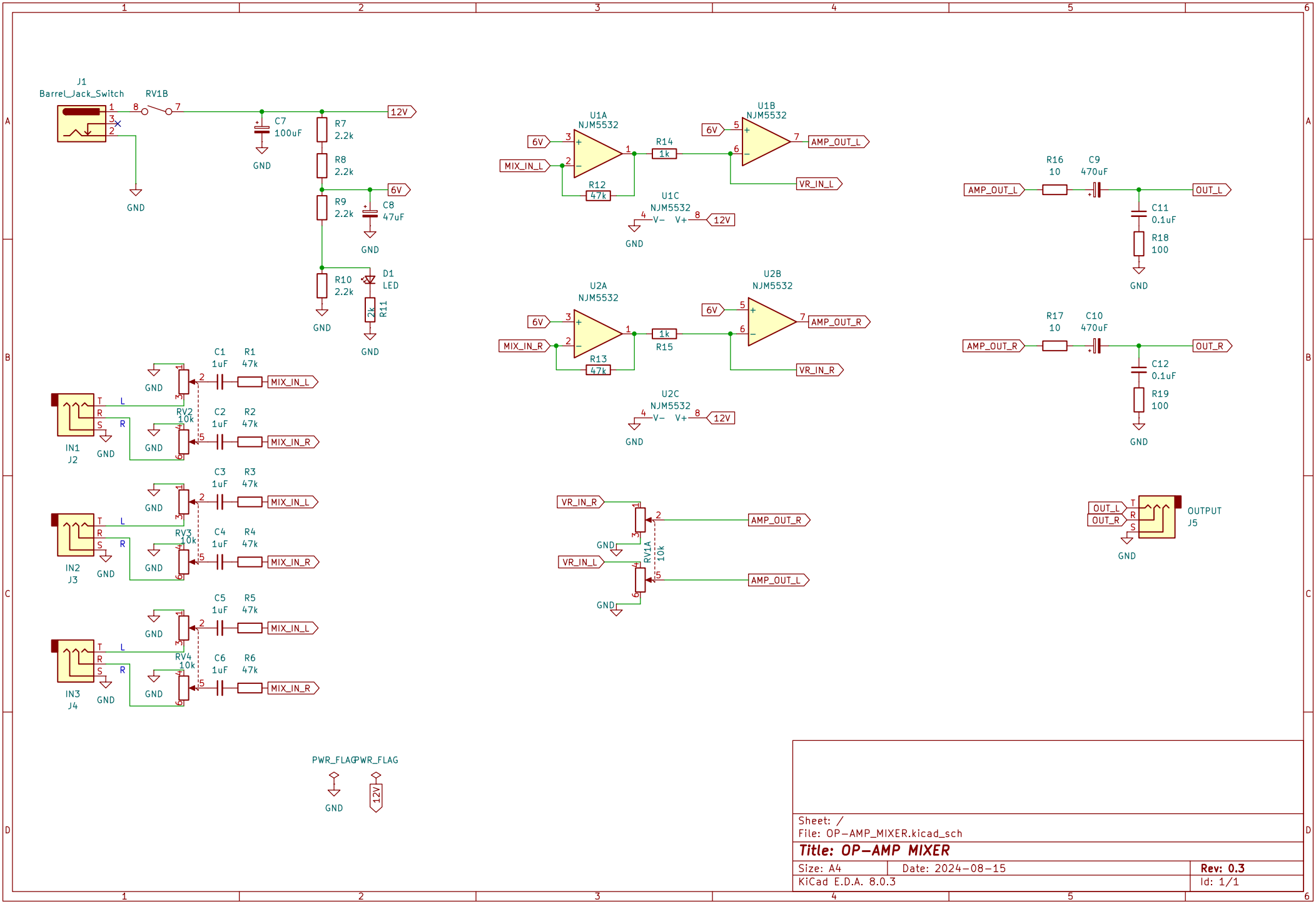

Sheet: /
File: OP-AMP_MIXER.kicad_sch

Title: OP-AMP MIXER

Size: A4	Date: 2024-08-15	**Rev: 0.3**
KiCad E.D.A. 8.0.3		Id: 1/1