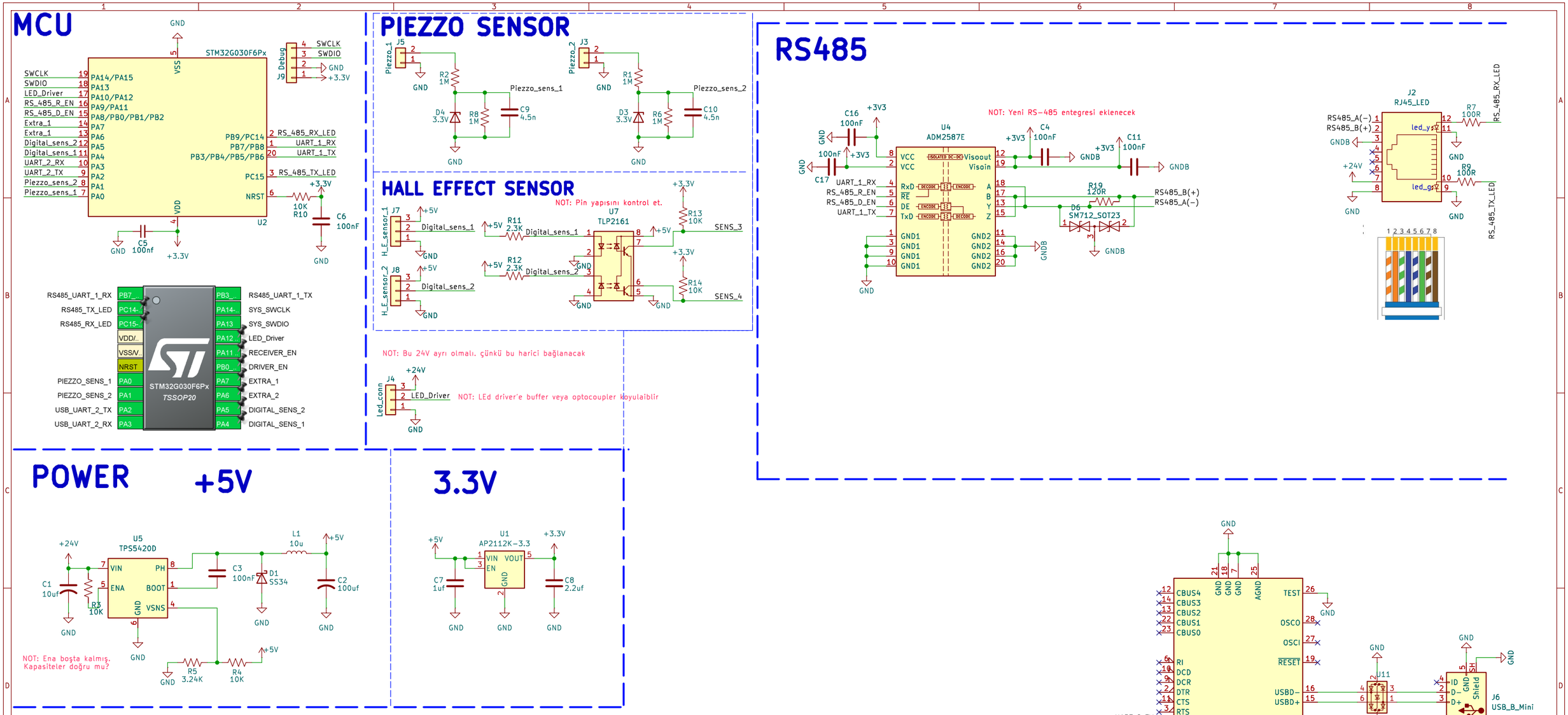

Starting Date: 2026-03-26
Ahmet Emin Akay
Yahya Çakır
Nox Etkinlik

Sheet: /
File: rs_485_proje.kicad_sch

Title: RS_485_haberlesme_karti

Size: A3	Date: 2026-04-08	**Rev: V0.1**
KiCad E.D.A. 9.0.8		Id: 1/1