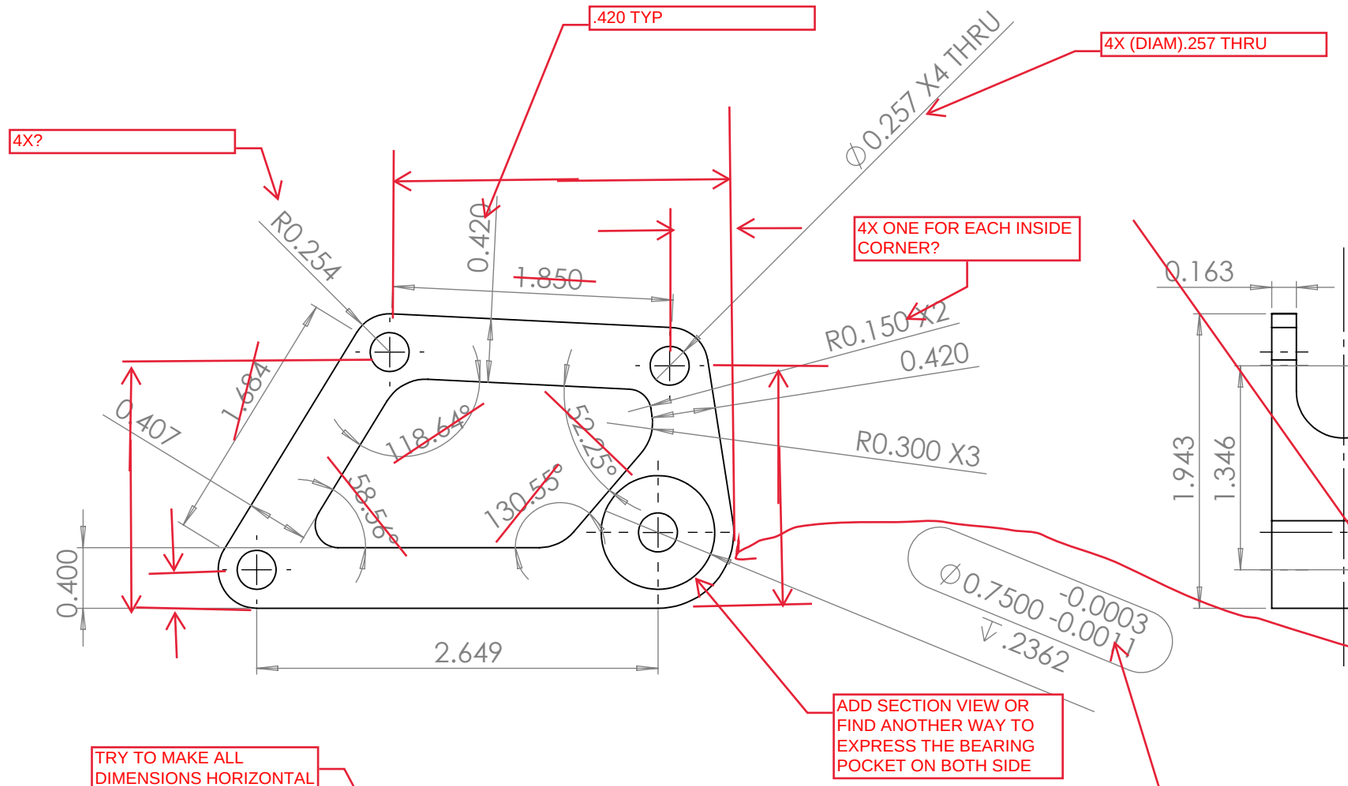

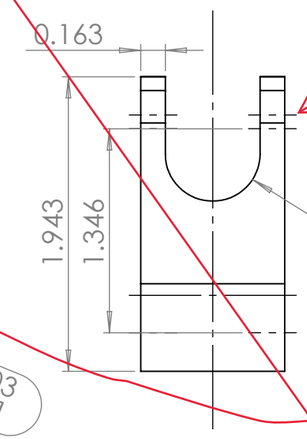

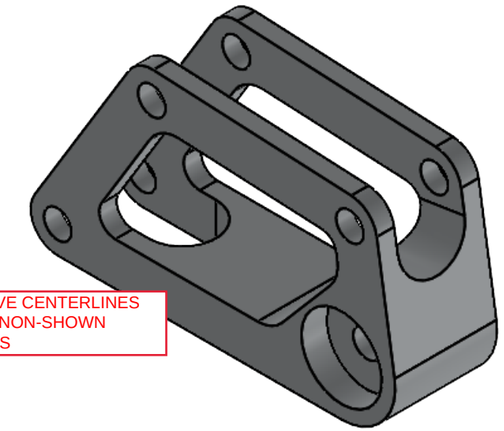

REMOVE CENTERLINES FROM NON-SHOWN HOLELS

THIS DIMESION IS NOT ORTHANGONAL SO WON'T BE VERY USEFUL. COULD REPLACE THIS WHOLE VIEW WITH SECTION THE BEAERING POCKET AT THE SAME ANGLE AS THIS FACE AND DIMENSION THE POCKETS AND THIS RADIUS IN SAME VIEW

REPLACE WITH SECTION VIEW

IS THIS PER SKF? JUST ASKING B/C IN PAST WE WOULD DIM THE NOMINAL VALUE AND CALC THE TOL WHILE MACHINING. PUTTING THE CALCULATED TOL IS MUCH BETTER! (CLAPPING EMOJI)

TRY TO MAKE ALL DIMENSIONS HORIZONTAL

2X .163
OR
DIMMING THE SLOT IS PREFERABLE BECAUSE THAT FEATURE IS THE ACTUAL COMPONENT INTERACTION

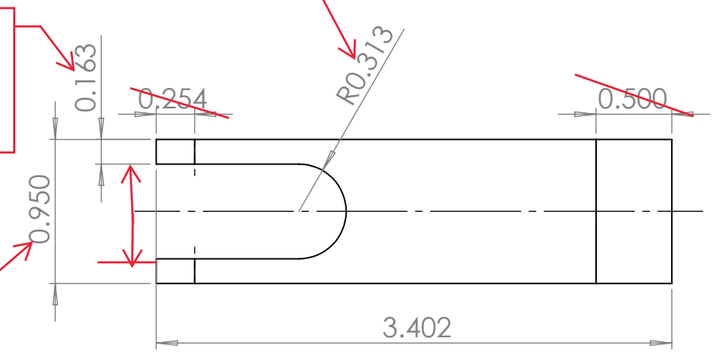

CHANGE DOC SETTINGS TO REMOVE ALL LEADING ZEROS. LEADING ZERO = METRIC IN ENGINEER DRAWINGS

ALL CAPS

URS TRULY: ME

UPDATE TO TODAY

TEMPLE FORMULA RACING

WWW.TEMPLEFORMULARACING.COM

PROPRIETARY AND CONFIDENTIAL

THE INFORMATION CONTAINED IN THIS DRAWING IS THE SOLE PROPERTY OF TEMPLE FORMULA RACING. ANY REPRODUCTION IN PART OR AS A WHOLE WITHOUT THE WRITTEN PERMISSION OF TFR IS STRICTLY PROHIBITED.

SYSTEM:	Suspension	UNLESS OTHERWISE SPECIFIED:	TEMPLE UNIVERSITY
QUANTITY:	2	TOLERANCES:	TITLE:
MATERIAL:	7075 Al	DECIMAL: X.X = ±0.05, X.XX = ±0.01, X.XXX = ±0.005, X.XXXX = ±0.0005 / ANGULAR: MACH: X.XX ±.10 DEG, BEND: X.X ±1.0 DEG / BREAK ALL EDGES	75200 - Rear Rocker
FINISH:	Machined	DIMENSIONS ARE IN INCHES	
PROJECTION:		NAME / DATE	SIZE: B / VIEW: Ortho / REV: A
DRAWING NOT TO SCALE	DRAWN BY:	T.O. / 1/27/2024	
	MADE BY:	T.O.	SCALE: 1:1 / WEIGHT: / SHEET 1 OF 3