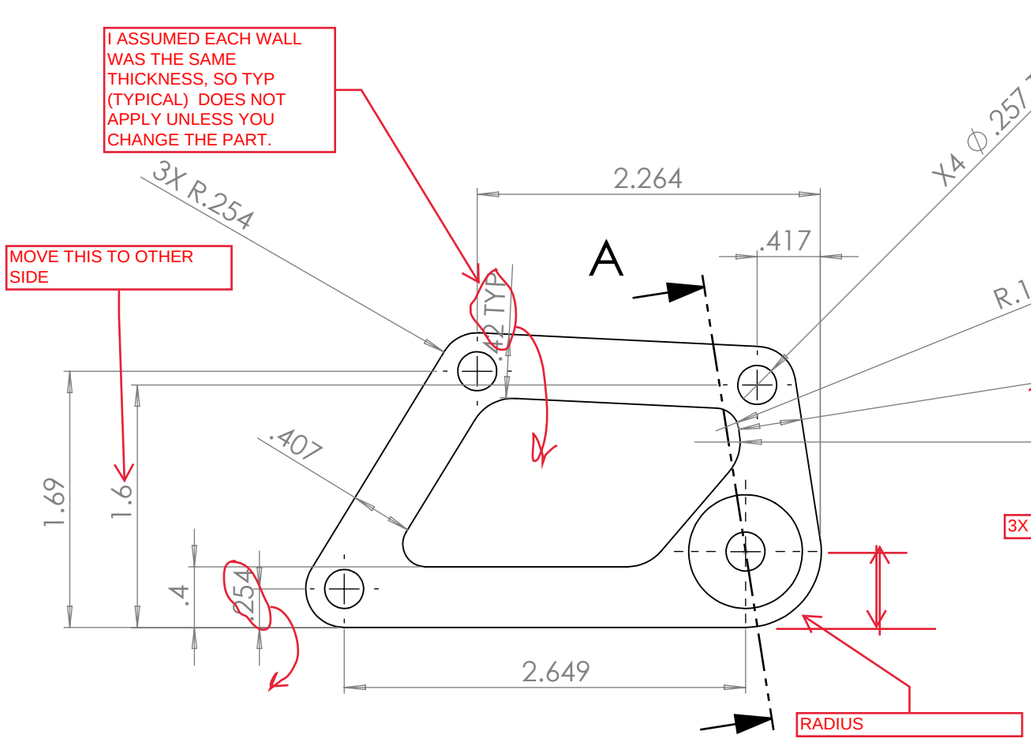

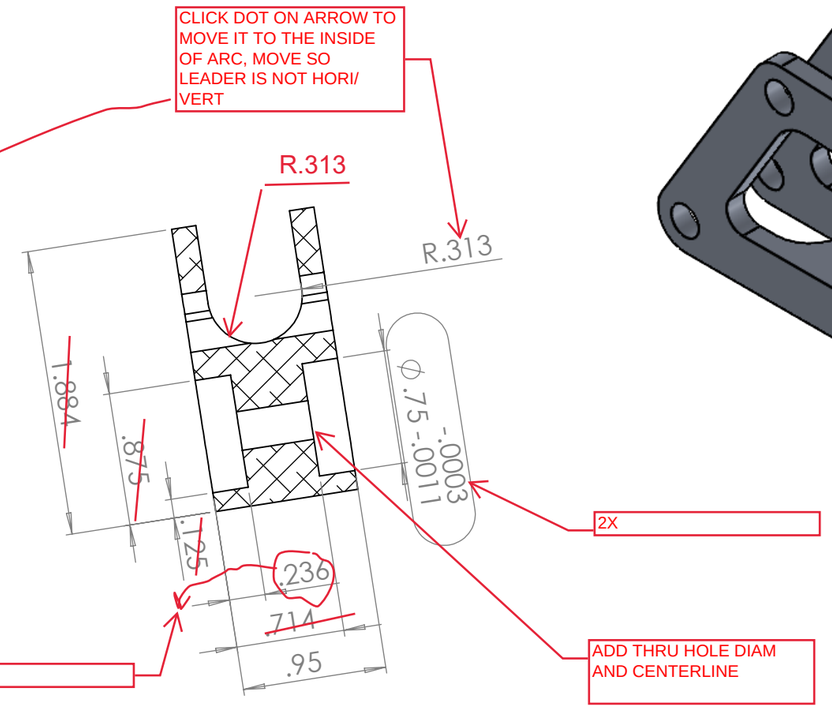

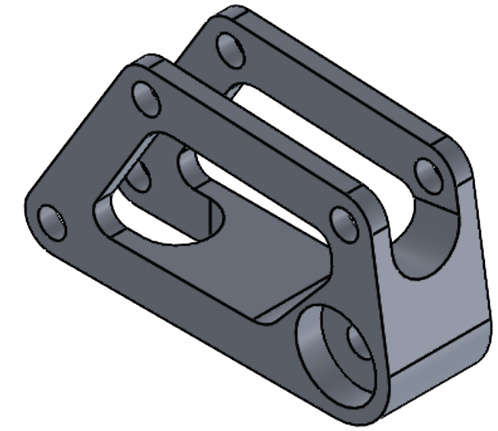

A

SECTION A-A

FONT SIZE MATCH

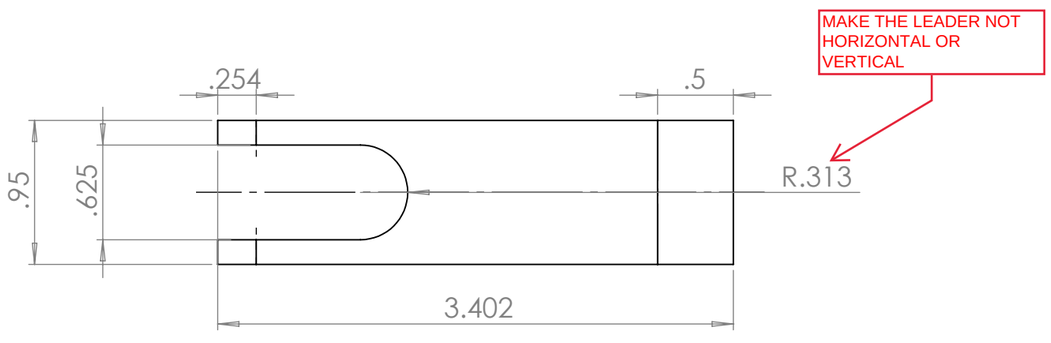

TEMPLE FORMULA RACING WWW.TEMPLEFORMULARACING.COM	SYSTEM: SUSPENSION	UNLESS OTHERWISE SPECIFIED: TOLERANCES: DECIMAL: X.X = ±0.05, X.XX = ±0.01, X.XXX = ±0.005, X.XXXX = ±0.0005 ANGULAR: MACH: X.XX ±.10 DEG, BEND: X.X ±1.0 DEG BREAK ALL EDGES	TEMPLE UNIVERSITY
	QUANTITY: 2		TITLE: 75200 - REAR ROCKER
	MATERIAL: 7075 Al		
	FINISH: Machined	DIMENSIONS ARE IN INCHES	
PROPRIETARY AND CONFIDENTIAL THE INFORMATION CONTAINED IN THIS DRAWING IS THE SOLE PROPERTY OF TEMPLE FORMULA RACING. ANY REPRODUCTION IN PART OR AS A WHOLE WITHOUT THE WRITTEN PERMISSION OF TFR IS STRICTLY PROHIBITED.	PROJECTION:	NAME / DATE	SIZE: B / VIEW: Ortho / REV: A
	DRAWING NOT TO SCALE — DRAWN BY:	T.O. / 1/28/2024	
	MADE BY:	T.O.	SCALE: 1:1 / WEIGHT: / SHEET 1 OF 3