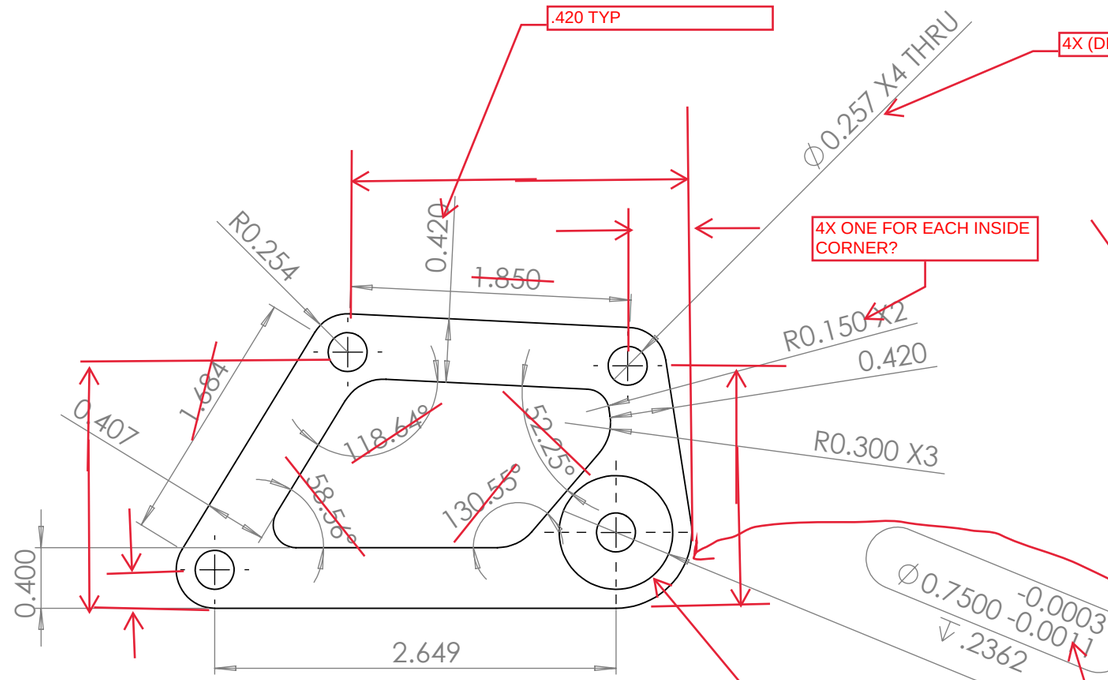

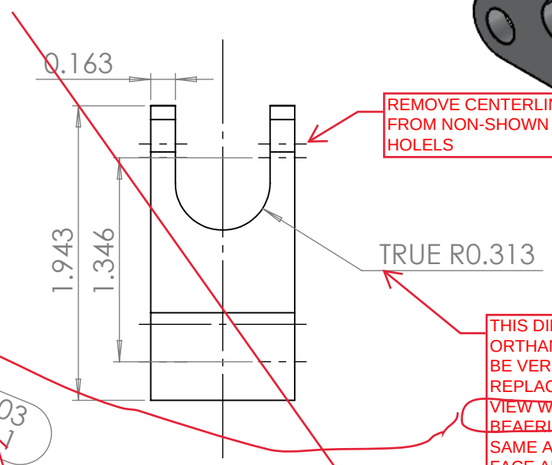

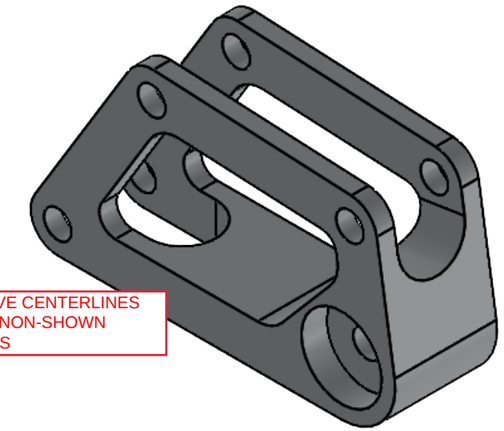

REMOVE CENTERLINES FROM NON-SHOWN HOLELS

THIS DIMESION IS NOT ORTHANGONAL SO WON'T BE VERY USEFUL. COULD REPLACE THIS WHOLE VIEW WITH SECTION THE BEAERING POCKET AT THE SAME ANGLE AS THIS FACE AND DIMENSION THE POCKETS AND THIS RADIUS IN SAME VIEW

ADD SECTION VIEW OR FIND ANOTHER WAY TO EXPRESS THE BEARING POCKET ON BOTH SIDE

REPLACE WITH SECTION VIEW

IS THIS PER SKF? JUST ASKING B/C IN PAST WE WOULD DIM THE NOMINAL VALUE AND CALC THE TOL WHILE MACHINING. PUTTING THE CALCULATED TOL IS MUCH BETTER! (CLAPPING EMOJI)

TRY TO MAKE ALL DIMENSIONS HORIZONTAL

2X .163

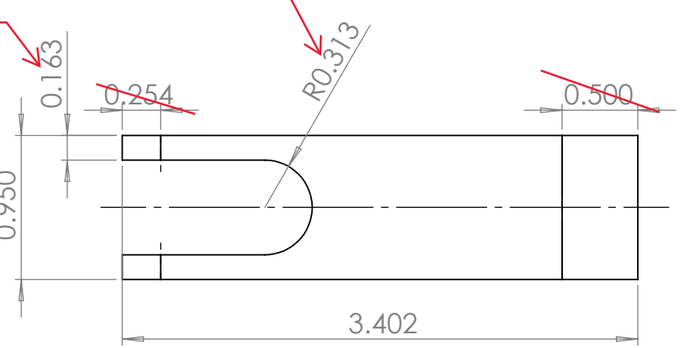

CHANGE DOC SETTINGS TO REMOVE ALL LEADING ZEROS. LEADING ZERO = METRIC IN ENGINEER DRAWINGS

TEMPLE FORMULA RACING

WWW.TEMPLEFORMULARACING.COM

PROPRIETARY AND CONFIDENTIAL

THE INFORMATION CONTAINED IN THIS DRAWING IS THE SOLE PROPERTY OF TEMPLE FORMULA RACING. ANY REPRODUCTION IN PART OR AS A WHOLE WITHOUT THE WRITTEN PERMISSION OF TFR IS STRICTLY PROHIBITED.

SYSTEM: Suspension		UNLESS OTHERWISE SPECIFIED:	TEMPLE UNIVERSITY
QUANTITY: 2		TOLERANCES: DECIMAL: X.X = ±0.05, X.XX = ±0.01, X.XXX = ±0.005, X.XXXX = ±0.0005; ANGULAR: MACH: X.XX ±.10 DEG, BEND: X.X ±1.0 DEG	TITLE: 75200 - Rear Rocker
MATERIAL: 7075 Al		BREAK ALL EDGES	
FINISH: Machined		DIMENSIONS ARE IN INCHES	
PROJECTION:		NAME	DATE
DRAWING NOT TO SCALE	DRAWN BY:	T.O.	1/27/2024
	MADE BY:	T.O.	

SIZE	VIEW:	REV
B	Ortho	A
SCALE: 1:1	WEIGHT:	SHEET 1 OF 3