43 FUSL
Fuel supply

Copyright ©Continental AG. Transmittal, reproduction, dissemination and/or editing of this document as well as utilisation of its contents and communication thereof to others without expressed authorisation are prohibited. Offenders will be held liable for payment of damages. All rights created by patent grant or registration of a utility model or design patent are reserved.

43.1 FUSL Configuration data

Input Data

NC_PSD_DLY_EFPPWM {p. 12139}	NC_STATE_TFU_PU {p. 11821}	NC_STATE_TFU_PU_AFTER_PUC {p. 11821}	NC_STATE_TFU_PUC {p. 11821}
NC_STATE_TFU_STAT {p. 11821}	NC_T_DLY_EFP_ACR_TEST_MAX {p. 12124}		

Configuration Data

Name	Mode	Coded Limits	Display Limits	Resolution	Unit
NC_NR_IP_FUP_SP_BAS	V/S	1... FFH	1... 255	1	-
Number of instances in set of interpolation tables for determination of basic fuel pressure setpoint					
NC_NR_MAF_FUP_SP	V	0... 1FH	1... 32	1	-
Number of mass air flow datapoints for FUP_SP					
NC_NR_N_FUP_SP	V	0... 1FH	1... 32	1	-
Number of engine speed datapoints for FUP_SP					
NC_NR_PUMP_LOBE	V	0... 7H	0 ...7	1	-
Configuration date describing number of lobes driving the high pressure pump					
NC_PSD_DLY	V	0... FFH	0... 255	1	-
The diagnosis is reactivated after (LV_INH_DIAG_XX 1->0 or CDN_DIAG_XX >0 (depending on case)) and LV_IGK 0->1 and reset and FMY reset after NC_PSD_DLY recurrences.					
NC_PSD_DLY_DIAG_VCV	-	1... FH	1... 15	1	-
Number of recurrences with diagnosis deactivation after diagnosis activation conditions are met					
NC_SEG_CLC_VCV_DIAG	V	1... 6H	1 ...6	1	-
Recurrence of gettiing diagnostic information of VCV from infrastructure (as multiple of segment, 2 = 2seg)					
SY_MPI	-	0... 2H	0 ...2	1	-
Defines if system applies only pure DI (= 0) , pure MPI (= 1) or mixed MPI-DI (= 2) injection operation modes.					

Global Configuration Data:

Here are listed the configuration data, which can be used in other aggregates:

Configuration Item	Range	Value	Comment
NC_NR_MAF_FUP_SP *Number of mass air flow datapoints for FUP_SP*	1... 32 0... 1FH	13 [-] 0xC	Number of mass air flow datapoints for FUP_SP
NC_PSD_DLY_DIAG_VCV *Number of recurrences with diagnosis deactivation after diagnosis activation conditions are met*	1... 15 1... FH	3 [-] 0x3	Number of recurrences with diagnosis deactivation after diagnosis activation conditions are met. (typical 3)

Local Configuration Data:

Here are listed the configuration data, which can be used within an aggregate:

Copyright ©Continental AG. Transmittal, reproduction, dissemination and/or editing of this document as well as utilisation of its contents and communication thereof to others without expressed authorisation are prohibited. Offenders will be held liable for payment of damages. All rights created by patent grant or registration of a utility model or design patent are reserved.

Configuration Item	Range	Value	Comment
NC_NR_IP_FUP_SP_BAS *Number of instances in set of interpolation tables for determination of basic fuel pressure setpoint*	1... 255 1... FFH	13 [-] 0xD	Number of instances for IP_FUP_SP_BAS_SEL
NC_NR_N_FUP_SP *Number of engine speed datapoints for FUP_SP*	1... 32 0... 1FH	12 [-] 0xB	Number of engine speed datapoints for LDPM_N_32_2_FUSL
NC_NR_PUMP_LOBE *Configuration date describing number of lobes driving the high pressure pump*	0 ...7 0... 7H	4 [-] 0x4	Number of lobes driving the high pressure pump
NC_PSD_DLY *The diagnosis is reactivated after (LV_INH_DIAG_XX 1->0 or CDN_DIAG_XX >0 (depending on case)) and LV_IGK 0->1 and reset and FMY reset after NC_PSD_DLY recurrences.*	0... 255 0... FFH	2 [-] 0x2	Setting for diagnosis reactivation after NC_PSD_DLY recurrences
NC_PSD_DLY_EFPPWM *Number of recurrences with diagnosis deactivation after diagnosis activation conditions are met (typical 2)*	1... 15 1... FH	2 [-] 0x2	Number of recurrences with diagnosis deactivation after diagnosis activation conditions are met (typical 2)
NC_SEG_CLC_VCV_DIAG *Recurrence of gettiing diagnostic information of VCV from infrastructure (as multiple of segment, 2 = 2seg)*	1 ...6 1... 6H	2 [-] 0x2	Recurrence of getting diagnostic information of VCV from infrastructure (as multiple of segment, 2 = 2seg)
NC_STATE_TFU_PU *Pull operating state for fuel temperature calculation (Value = 1)*	0 ...5 0... 5H	1 - 0x1	Pull operating state for fuel temperature calculation (Value = 1)
NC_STATE_TFU_PU_AFTER_PUC *PU-Phase after PUC-Phase operating state for fuel temperature calculation (Value = 3)*	0 ...5 0... 5H	3 - 0x3	PU-Phase after PUC-Phase operating state for fuel temperature calculation (Value = 3)
NC_STATE_TFU_PUC *Pull fuel cut off operating state for fuel temperature calculation (Value = 2)*	0 ...5 0... 5H	2 - 0x2	Pull fuel cut off operating state for fuel temperature calculation (Value = 2)
NC_STATE_TFU_STAT *Normal operating state for fuel temperature calculation (Value = 0)*	0 ...5 0... 5H	0 - 0x0	Normal operating state for fuel temperature calculation (Value = 0)
NC_T_DLY_EFP_ACR_TEST_MAX *Duration time for the actuator test at EFPPWM = 100 % till switch off (value: 5 s)*	0... 655.35 0... FFFFH	5 [s] 0x1F4	Duration time for the actuator test at EFPPWM = 100 % till switch off (value: 5 s)
SY_MPI *Defines if system applies only pure DI (= 0) , pure MPI (= 1) or mixed MPI-DI (= 2) injection operation modes.*	0 ...2 0... 2H	2 [-] 0x2	Defines if system applies only pure DI (= 0) , pure MPI (= 1) or mixed MPI-DI (= 2) injection operation modes.

Copyright ©Continental AG. Transmittal, reproduction, dissemination and/or editing of this document as well as utilisation of its contents and communication thereof to others without expressed authorisation are prohibited. Offenders will be held liable for payment of damages. All rights created by patent grant or registration of a utility model or design patent are reserved.

43.2 AGGR adaptation: FUSL

▶ Data Definition

Name	Mode	Coded Limits	Display Limits	Resolution	Unit
EFPPWM_I	O/V	8000... 7FFFH	-50... 49.99847412109	0.00152588	%
I-Part of the controller					
EFPPWM_I_AD	O/V	8000... 7FFFH	-50... 49.99847412109	0.00152588	%
Adaptive I-Part of the controller					
EFPPWM_MIN_AD	O/V	0... FFFFH	0... 99.99847412109	0.00152588	%
Minimum pump speed of the electrical fuel pump as PWM signal					
FUP_EFP_ST_H	O/V	0... FFFFH	0... 173888	2.6533608	hPa
Pressure at observation start for the pressure increase					
FUP_EFP_ST_L	O/V	0... FFFFH	0... 173888	2.6533608	hPa
Pressure at observation start for the pressure decrease					
FUP_EFP_STOP_H	O/V	0... FFFFH	0... 173888	2.6533608	hPa
Pressure at observation stop for the pressure increase					
FUP_EFP_STOP_L	O/V	0... FFFFH	0... 173888	2.6533608	hPa
Pressure at observation stop for the pressure decrease					
FUP_H	O/V	0... FFFFH	0... 347776	5.3067216	hPa
Fuel pressure, high range					
FUP_L_SAE	O/V	0... FFH	0... 765	3	kPA
PIDOA Fuel rail pressure (low range for MPI), reference to atmosphere (gauge pressure)					
FUP_REL_SAE	O/V	0... FFFFH	0... 5177.265	0.079	kPa
PID22 Fuel rail pressure relative to manifold vacuum					
LV_REFU_ACT	O/V	0... 1H	0 ...1	1	-
Logical variable for active first fuel fill in function					
R_VCV	O/V	0... FFFFH	0... 15.99975585938	244.141e-6	Ohm
resistance of the VCV					
RHO_FUEL	O/V	153B... FFFFH	74.63950560769 ...900	0.01373312	mg/ cm**3
Fuel density					
T_EFP_MEM_H	O/V	0... FFFFH	0... 655.35	0.01	s
Time for the pressure increase					
T_EFP_MEM_L	O/V	0... FFFFH	0... 655.35	0.01	s
Time for the pressure decrease					
TFU_HPP_MES	O/V	0... FEH	-48... 142.5	0.75	°C
Measured fuel temperature for high pressure pump					
V_FUP_EFP_MV	O/V	0... 3FFH	0... 4.9951171875	0.00488281	V
Voltage of the low fuel pressure sensor (for diagnosis)					
VFF_HPP	O/V	0... FFFFH	0... 17179.60704	0.262144	ml/min
High pressure pump volume flow					

Copyright ©Continental AG. Transmittal, reproduction, dissemination and/or editing of this document as well as utilisation of its contents and communication thereof to others without expressed authorisation are prohibited. Offenders will be held liable for payment of damages. All rights created by patent grant or registration of a utility model or design patent are reserved.

Input Data

AMP {p. 13840}	FUP {p. 11886}	FUP_EFP_MES {p. 11905}	LV_FFFI_ACT {p. 12398}
MAP {p. 13894}	MFF_SP_EFP_CTL {p. 11463}	T_SEG_AV {p. 8036}	TFPA {p. 12089}
TFU_HPP {p. 11817}	VP_FUP_EFP_MES {p. 11905}		

Calibration Data

Name	Mode	Coded Limits	Display Limits	Resolution	Unit
C_FAC_R_TFPA_VCV_SLOP_NORM	V	0... FFH	0... 0.031875	0.000125	-
slope of the VCV resistance depending on the fuel pressure actuator temperature					
C_R_VCV_NORM	V	0... FFFFH	0... 15.99975585938	244.141e-6	Ohm
normed resistance of the VCV at 20°C					
IP_RHO_FUEL	-	153B... FFFFH	74.63950560769 ...900	0.01373312	mg/ cm**3
LDP_TFU_HPP_IP_RHO_FUEL	4	0... FEH	-48... 142.5	0.75	°C
Map defining the fuel density as a function of fuel temperature					

General Information

Aggregate Adaptation module for implementation of generic FUSL package to SIMOS12.

Application Conditions

Initialisation:

```
at reset:
EFPPWM_I        = 0
EFPPWM_I_AD     = 0
EFPPWM_MIN_AD   = 0
FUP_EFP_STOP_H  = 0
FUP_EFP_STOP_L  = 0
FUP_EFP_ST_H    = 0
FUP_EFP_ST_L    = 0
T_EFP_MEM_H     = 0
T_EFP_MEM_L     = 0
calculate complete formular section, additionally
```

Activation:

```
always
```

Deactivation:

```
never
```

Recurrence:

```
IF    LV_ST_END == 1
THEN  SEG
ELSE  10ms
ENDIF
```

Function Description

```
FUP_H          = FUP
FUP_L_SAE      = (FUP_EFP_MES - AMP)*(0.1 kPa/hPa)
FUP_REL_SAE    = (FUP_EFP_MES - MAP)*(0.1 kPa/hPa)
LV_REFU_ACT    = LV_FFFI_ACT
RHO_FUEL = IP_RHO_FUEL( TFU_HPP )
TFU_HPP_MES    = 0 %[°C]
V_FUP_EFP_MV = VP_FUP_EFP_MES
VFF_HPP = MAX (0; (MFF_SP_EFP_CTL) * 60 / ( RHO_FUEL * T_SEG_AV ))
R_VCV = C_R_VCV_NORM * (1 +
                        ((TFPA - 20°C) * C_FAC_R_TFPA_VCV_SLOP_NORM [1/K])
                       )
```

Copyright ©Continental AG. Transmittal, reproduction, dissemination and/or editing of this document as well as utilisation of its contents and communication thereof to others without expressed authorisation are prohibited. Offenders will be held liable for payment of damages. All rights created by patent grant or registration of a utility model or design patent are reserved.

43.3 Fuel temperature

▶ Data Definition

Name	Mode	Coded Limits	Display Limits	Resolution	Unit
FAC_TFU_OFS_T_ES_FDOUT	V	0... FFFFH	0... 1.999969482422	30.5176e-6	-
Factor for fade-out of T_ES based TFU offset, depending on T_AST					
FAC_TFU_STAT	V	8000... 7FFFH	-32... 31.9990234375	976.563e-6	-
Factor for interpolation between hot- and cold-map depending on ambient air temperature (TAM)					
LV_TFU_IS_OFS_ACT	V	0... 1H	0 ...1	1	-
Flag, if the TFU idle speed correction is active					
LV_TFU_STATE_1_ST_RAMP	V	0... 1H	0 ...1	1	-
State of Flip-Flop 1 in ramp-in function for start phase					
LV_TFU_STATE_2_ST_RAMP	V	0... 1H	0 ...1	1	-
State of Flip-Flop 2 in ramp-in function for start phase					
N_PU_SAVE_TFU	V	0... FFH	0... 8160	32	rpm
Engine speed at PU = 0 -> 1, saved for calc. of modeled fuel temperature in pull operating state					
N_PUC_SAVE_TFU	V	0... FFH	0... 8160	32	rpm
Engine speed at PU = 0 -> 1 and TQ_AV < 0, saved for calc. of modeled fuel temperature in pull fuel cut off operating state					
STATE_TFU	V	0... FFH	0... 255	1	-
State of Fuel temperature model (0 = normal, 1 = pull, 2 = pull fuel cut off, 3 = pu after puc)					
TFU	O/V	0... FEH	-48... 142.5	0.75	°C
Fuel temperature					
TFU_COR_STAT_PUC_PU	V	0... FEH	-48... 142.5	0.75	°C
Corrected fuel temperature in static state, PUC or PU					
TFU_COR_STAT_PUC_PU_PREV_FIL	V	0... FEH	-48... 142.5	0.75	°C
TFU_COR_STAT_PUC_PU before low pass filtering					
TFU_EFP	O/V	0... FEH	-48... 142.5	0.75	°C
Fuel temperature for the low pressure pump					
TFU_EFP_1	O/V	0... FEH	-48... 142.5	0.75	°C
Fuel temperature for the low pressure pump					
TFU_H_RES_ST_RAMP	V	0... FE00H	-48... 142.5	0.00292969	°C
Fuel temperature in high resolution for ramp-in fuction during start phase					
TFU_HPP	O/V	0... FEH	-48... 142.5	0.75	°C
Fuel temperature for high pressure pump					
TFU_HPP_1	O/V	0... FEH	-48... 142.5	0.75	°C
Fuel temperature for high pressure pump					
TFU_IS_OFS_H_RES	V	0... FE00H	-48... 142.5	0.00292969	°C
TFU offset at idle speed correction (calculated in high resolution)					
TFU_MDL	V	0... FEH	-48... 142.5	0.75	°C
Modeled fuel temperature (before start ramp and idle speed correction)					
TFU_MDL_2	O/V	0... FEH	-48... 142.5	0.75	°C
modelled high pressure fuel temperatur					
TFU_OFS_T_ES	V	0... FEH	-48... 142.5	0.75	°C
T_ES based TFU offset, final value					
TFU_OFS_T_ES_BAS	V	0... FEH	-48... 142.5	0.75	°C

Copyright ©Continental AG. Transmittal, reproduction, dissemination and/or editing of this document as well as utilisation of its contents and communication thereof to others without expressed authorisation are prohibited. Offenders will be held liable for payment of damages. All rights created by patent grant or registration of a utility model or design patent are reserved.

Name	Mode	Coded Limits	Display Limits	Resolution	Unit
T_ES based TFU offset, basic value					
TFU_OFS_T_ES_DIF_LIM	V	0... FEH	-48... 142.5	0.75	°C
T_ES based TFU offset, value after gradient limitation of T_AST based fade-out value					
TFU_OFS_T_ES_FDOUT	V	0... FEH	-48... 142.5	0.75	°C
T_ES based TFU offset, value after T_AST based fade-out of basic value					
TFU_PU	V	0... FEH	-48... 142.5	0.75	°C
Modeled fuel temperature in pull operating state					
TFU_PU_SAVE	V	0... FEH	-48... 142.5	0.75	°C
Saved fuel temperature in pull cut off operating state at PU = 0 -> 1, for calc. of modeled fuel temperature in pull operating state					
TFU_PUC	V	0... FEH	-48... 142.5	0.75	°C
Modeled fuel temperature in pull fuel cut off operating state					
TFU_PUC_SAVE	V	0... FEH	-48... 142.5	0.75	°C
Fuel temperature in static state at PU = 0 -> 1 and TQ_AV < 0, saved for calc. of modeled fuel temperature in pull fuel cut off operating state					
TFU_STAT	V	0... FEH	-48... 142.5	0.75	°C
Modeled fuel temperature in static operating state					

Input Data

LV_ENG_LST_ST_STST {p. 8499}	LV_ERR_TFU_HPP {p. 23182}	LV_ES {p. 7530}	LV_FIRST_VLD_TOOTH {p. 8042}
LV_IGK {p. 24082}	LV_PU {p. 7530}	LV_PUC {p. 7530}	LV_ST_END {p. 7530}
LV_STST_STOP_CYC {p. 8458}	LV_T_ES_NOT_PLAUS {p. 8333}	MFF_SP_FUP_CTL {p. 11463}	N_32 {p. 8079}
T_AST {p. 8436}	T_ES {p. 8334}	TAM {p. 1143}	TCO {p. 8846}
TFU_EFP_CUS {p. 11807}	TFU_HPP_CUS {p. 11808}	TFU_HPP_CUS_1 {p. 11808}	TFU_HPP_MES {p. 11815}
TOIL {p. 7287}	TQ_AV {p. 23922}	VS {p. 26240}	

Calibration Data

Name	Mode	Coded Limits	Display Limits	Resolution	Unit
C_DLY_PU_ON_OFF	-	0... FFH	0... 25.5	0.1	s
Duration of PU-Phases which are filtered before entering the state machine					
C_DLY_PUC_ON_OFF	-	0... FFH	0... 25.5	0.1	s
Duration of PUC-Phases which are filtered before entering the state machine					
C_T_ES_TFU_OFS_RST_MIN	-	0... FFFFH	0... 65535	1	min
Minimum value of T_ES for switching from slow to fast gradient limitation for T_ES based TFU offset					
C_T_TFU_CLC_ST_END	-	0... FFFFH	0... 6553.5	0.1	s
Time after start to deactivate the ramp-in function for TFU calulation					
C_TFU_COR_INC	-	0... FE00H	-48... 142.5	0.00292969	°C
Increment for TFU-Ramp-In function during start phase					
C_TFU_COR_STAT_PUC_PU_GRD_DOWN	-	0... FFFFH	-96... 95.9970703125	0.00292969	°C/s

Copyright ©Continental AG. Transmittal, reproduction, dissemination and/or editing of this document as well as utilisation of its contents and communication thereof to others without expressed authorisation are prohibited. Offenders will be held liable for payment of damages. All rights created by patent grant or registration of a utility model or design patent are reserved.

Name	Mode	Coded Limits	Display Limits	Resolution	Unit
Maximum gradient of TFU_COR_STAT_PUC_PU down					
C_TFU_COR_STAT_PUC_PU_GRD_UP	-	0... FFFFH	-96... 95.9970703125	0.00292969	°C/s
Maximum gradient of TFU_COR_STAT_PUC_PU up					
C_TFU_EFP_OFS	-	0... FEH	-48... 142.5	0.75	°C
Offset for the modelling of the fuel temperature of the low pressure pump					
C_TFU_IS_OFS_DLY	-	0... FFFFH	0... 6553.5	0.1	s
Delay time for start of TFU idle speed correction					
C_TFU_IS_OFS_MAX_H_RES	-	0... FE00H	-48... 142.5	0.00292969	°C
Maximum value of the TFU offset at idle speed correction					
C_TFU_IS_OFS_MIN_H_RES	-	0... FE00H	-48... 142.5	0.00292969	°C
Minimum value of the TFU offset at idle speed correction					
C_TFU_IS_OFS_RAMP_OUT_DLY	-	0... FFFFH	0... 6553.5	0.1	s
Delay time for start of TFU idle speed correction ramp out					
C_TFU_IS_OFS_VS_MIN	-	0... FFH	0... 255	1	km/h
Vehicle speed threshold for start of TFU idle speed correction					
C_TFU_MIN_TAM_H	V	0... FEH	-48... 142.5	0.75	°C
If the ambient air temperature is above this threshold, then this threshold limits the minimum fuel temperature, else the ambient air temperature limits the minimum fuel temperature.					
C_TFU_OFS_GRD_DEC_FAST	-	0... FFFFH	-96... 95.9970703125	0.00292969	°C/s
Gradient decrement of TFU_OFS_T_ES_DIF_LIM in fast mode					
C_TFU_OFS_GRD_DEC_SLOW	-	0... FFFFH	-96... 95.9970703125	0.00292969	°C/s
Gradient decrement of TFU_OFS_T_ES_DIF_LIM in slow mode					
C_TFU_OFS_GRD_INC_FAST	-	0... FFFFH	-96... 95.9970703125	0.00292969	°C/s
Gradient increment of TFU_OFS_T_ES_DIF_LIM in fast mode					
C_TFU_OFS_GRD_INC_SLOW	-	0... FFFFH	-96... 95.9970703125	0.00292969	°C/s
Gradient increment of TFU_OFS_T_ES_DIF_LIM in slow mode					
C_TFU_SENS_CONF	V	0... 2H	0 ...2	1	-
Selector for TFU calculation mode					
C_TFU_STAT_OFS	-	0... FEH	-48... 142.5	0.75	°C
Offset for calculation of TFU in static state					
C_TFU_STAT_STND	-	0... FEH	-48... 142.5	0.75	°C
Constant for standardisation at calculation of TFU in static state					
C_TQ_AV_TFU_PU_COR	-	8000... 7FFFH	-1024... 1023.96875	0.03125	Nm
Threshold for deactivation of PUC-Correction (Fuel temp calculation)					
IP_FAC_TFU_T_ES_T_AST	-	0... FFFFH	0... 1.999969482422	30.5176e-6	-
LDP_IP_FAC_TFU_T_ES_T_AST	4	0... FFFFH	0... 6553.5	0.1	s
Factor for fade-out of T_ES based TFU offset, depending on T_AST					
IP_TFU_IS_OFS_DEC	-	0... FE00H	-48... 142.5	0.00292969	°C
LDPM_N_32_IP_TFU_IS_OFS	8	0... FFH	0... 8160	32	rpm
Decrement for TFU offset during idle speed					

Copyright ©Continental AG. Transmittal, reproduction, dissemination and/or editing of this document as well as utilisation of its contents and communication thereof to others without expressed authorisation are prohibited. Offenders will be held liable for payment of damages. All rights created by patent grant or registration of a utility model or design patent are reserved.

Name	Mode	Coded Limits	Display Limits	Resolution	Unit
IP_TFU_IS_OFS_INC	-	0... FE00H	-48... 142.5	0.00292969	°C
LDPM_N_32_IP_TFU_IS_OFS	8	0... FFH	0... 8160	32	rpm
Increment for TFU offset during idle speed					
IP_TFU_PU	-	0... FEH	-48... 142.5	0.75	°C
LDP_N_32_N_PU_SAVE_DIV_TFU	6	0... FFH	0... 8160	32	rpm
Fuel temperature in pull operating state					
IP_TFU_PUC	-	0... FEH	-48... 142.5	0.75	°C
LDP_N_PUC_SAVE_TFU_PUC	6	0... FFH	0... 8160	32	rpm
LDP_N_32_N_PUC_SAVE_DIV_TFU	6	0... FFH	0... 8160	32	rpm
Fuel temperature in pull fuel cut off operating state					
IP_TFU_STAT_COLD	-	0... FEH	-48... 142.5	0.75	°C
LDPM_MFF_SP_FUP_CTL_TFU	8	0... FFFFH	0... 1389	0.02119478	mg
LDPM_N_32_TFU	8	0... FFH	0... 8160	32	rpm
Fuel temperature in static operating state and cold engine					
IP_TFU_STAT_HOT	-	0... FEH	-48... 142.5	0.75	°C
LDPM_MFF_SP_FUP_CTL_TFU	8	0... FFFFH	0... 1389	0.02119478	mg
LDPM_N_32_TFU	8	0... FFH	0... 8160	32	rpm
Fuel temperature in static operating state and hot engine					
IP_TFU_T_ES_COR	-	0... FEH	-48... 142.5	0.75	°C
LDP_IP_TFU_T_ES_COR	6	0... FFFFH	0... 65535	1	min
Basic value for T_ES based TFU offset					
IP_TFU_TAM_COR	-	0... FEH	-48... 142.5	0.75	°C
LDP_TAM_TFU_TAM_COR	6	0... FEH	-48... 142.5	0.75	°C
Correction of fuel temperature depending on ambient air temperature					
IP_TFU_TCO_COR	-	0... FEH	-48... 142.5	0.75	°C
LDP_TCO_TFU_TCO_COR	6	0... FEH	-48... 142.5	0.75	°C
Correction fuel temperature depending on coolant temperature					
IP_TFU_TOIL_COR	-	0... FEH	-48... 142.5	0.75	°C
LDP_TOIL_TFU_TOIL_COR	6	0... FEH	-48... 142.5	0.75	°C
Correction of fuel temperature depending on oil temperature					
IP_TFU_VS_COR	-	0... FEH	-48... 142.5	0.75	°C
LDP_VS_TFU_VS_COR	6	0... FFH	0... 255	1	km/h
Correction fuel temperature depending on vehicle speed					
LC_SWI_TFU_CLC	-	0... 1H	0 ...1	1	-
Switch for TFU_EFP and TFU_HPP selection calculated by customer model or by FTM model (0=FTM model; 1 = customer model)					
LC_TFU_H_RES_ST_RAMP_INI	-	0... 1H	0 ...1	1	-
Switch to activate initialization at IGK_ON (1=active; 0=without effect)					
LC_TFU_IS_OFS_ACT_ST_RAMP	-	0... 1H	0 ...1	1	-
Switch, if TFU idle speed correctin can be active during TFU start ramp (1 = idle speed cor. can be active)					
LC_TFU_OFS_T_ES_IGK_ACT	-	0... 1H	0 ...1	1	-
Switch for activation of T_ES based TFU offset also during manual start-stop operation					

Copyright ©Continental AG. Transmittal, reproduction, dissemination and/or editing of this document as well as utilisation of its contents and communication thereof to others without expressed authorisation are prohibited. Offenders will be held liable for payment of damages. All rights created by patent grant or registration of a utility model or design patent are reserved.

Configuration Data

Name	Mode	Coded Limits	Display Limits	Resolution	Unit
NC_FID_ERR_TFU_HPP_MES	V	0... FFFFH	0... 65535	1	-
Permission to calculate TFU based on TFU_HPP_MES value					
NC_STATE_TFU_PU	-	0... 5H	0 ...5	1	-
Pull operating state for fuel temperature calculation (Value = 1)					
NC_STATE_TFU_PU_AFTER_PUC	-	0... 5H	0 ...5	1	-
PU-Phase after PUC-Phase operating state for fuel temperature calculation (Value = 3)					
NC_STATE_TFU_PUC	-	0... 5H	0 ...5	1	-
Pull fuel cut off operating state for fuel temperature calculation (Value = 2)					
NC_STATE_TFU_STAT	-	0... 5H	0 ...5	1	-
Normal operating state for fuel temperature calculation (Value = 0)					

Import actions:

ACTION_FARM_GetPermission(**IN** <PRM_FID>, **OUT** <PRM_LV_PRMS>)

General Information

This function calculates the fuel temperature at the injector head.

Application Conditions

Initialisation: `RST, IGKON, ERU2ES`

Activation: `1S: always`
`100MS: always`

Deactivation: `never`

Recurrence: `1S, 100MS`

Function Description

Copyright ©Continental AG. Transmittal, reproduction, dissemination and/or editing of this document as well as utilisation of its contents and communication thereof to others without expressed authorisation are prohibited. Offenders will be held liable for payment of damages. All rights created by patent grant or registration of a utility model or design patent are reserved.

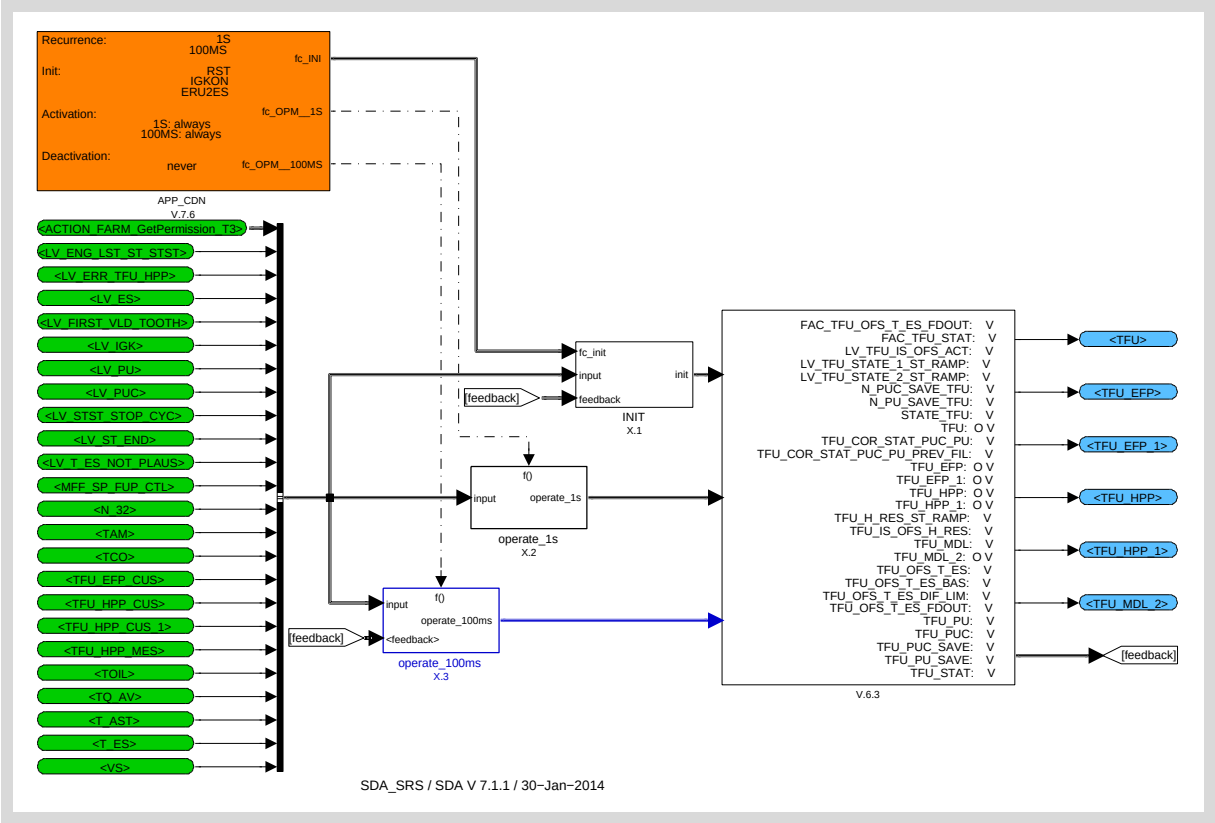

Figure 43.3.1:

Copyright ©Continental AG. Transmittal, reproduction, dissemination and/or editing of this document as well as utilisation of its contents and communication thereof to others without expressed authorisation are prohibited. Offenders will be held liable for payment of damages. All rights created by patent grant or registration of a utility model or design patent are reserved.

43.3.1 Initialization

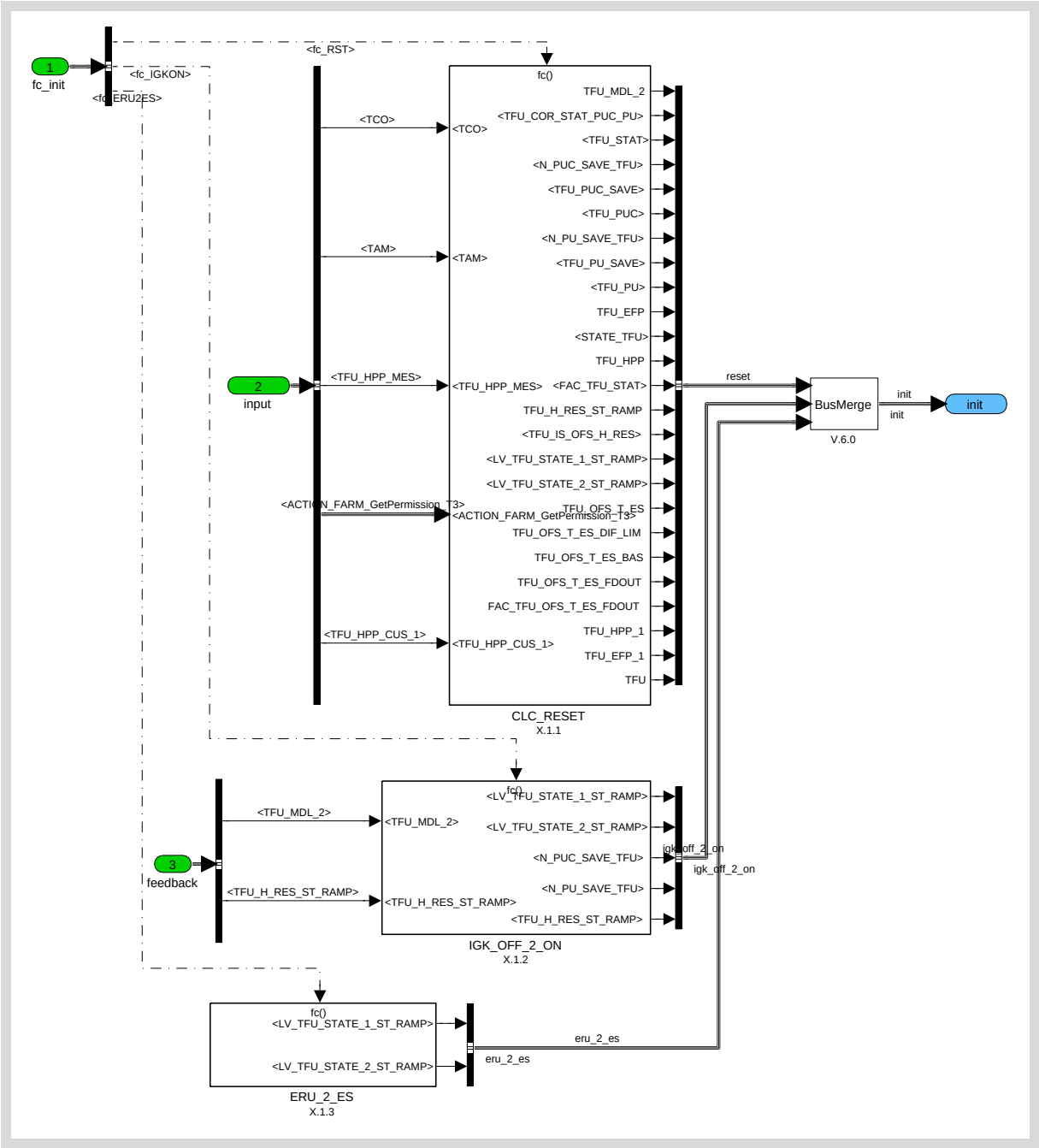

Figure 43.3.2:

Copyright ©Continental AG. Transmittal, reproduction, dissemination and/or editing of this document as well as utilisation of its contents and communication thereof to others without expressed authorisation are prohibited. Offenders will be held liable for payment of damages. All rights created by patent grant or registration of a utility model or design patent are reserved.

43.3.1.1 Initialization at Reset

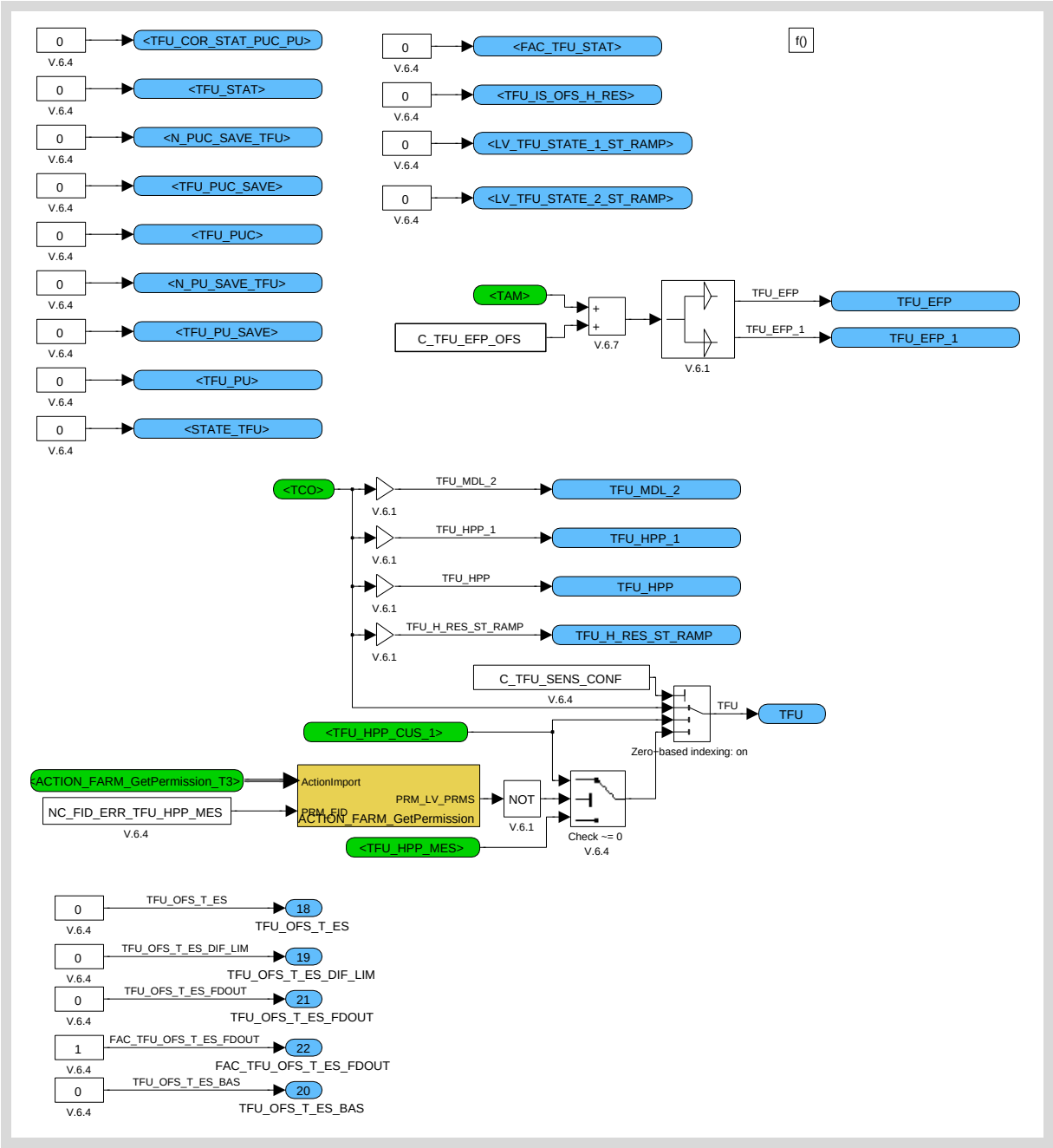

Figure 43.3.3:

Copyright ©Continental AG. Transmittal, reproduction, dissemination and/or editing of this document as well as utilisation of its contents and communication thereof to others without expressed authorisation are prohibited. Offenders will be held liable for payment of damages. All rights created by patent grant or registration of a utility model or design patent are reserved.

43.3.1.2 Initialization at Ignition-Key-Off-2-On

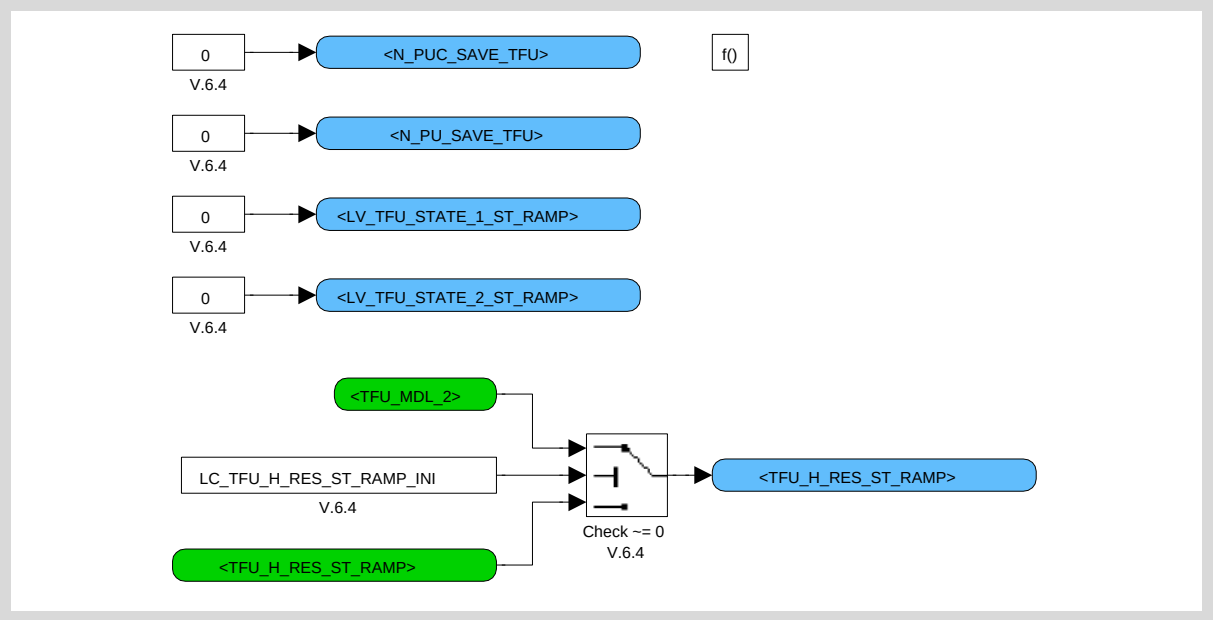

Figure 43.3.4:

43.3.1.3 Initialization at Engine-Run-2-Engine-Stop

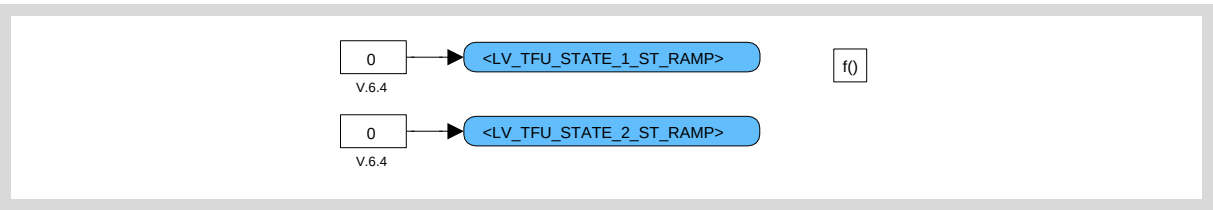

Figure 43.3.5:

43.3.2 Calculation in 1 second recurrence

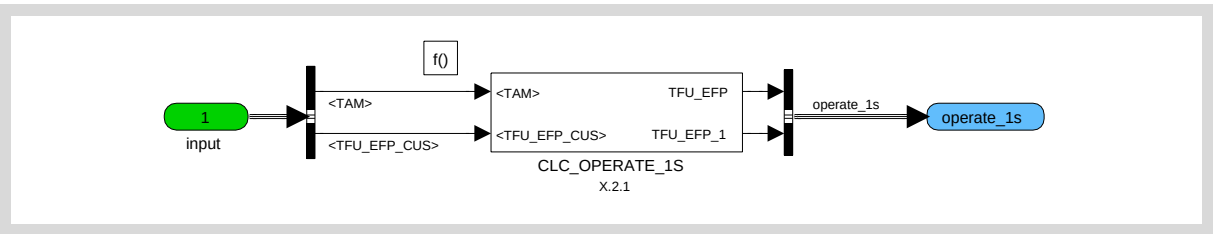

Figure 43.3.6:

Copyright ©Continental AG. Transmittal, reproduction, dissemination and/or editing of this document as well as utilisation of its contents and communication thereof to others without expressed authorisation are prohibited. Offenders will be held liable for payment of damages. All rights created by patent grant or registration of a utility model or design patent are reserved.

43.3.2.1 Calculation of TFU_EFP

Here the Fuel temperature for the low pressure pump is calculated.

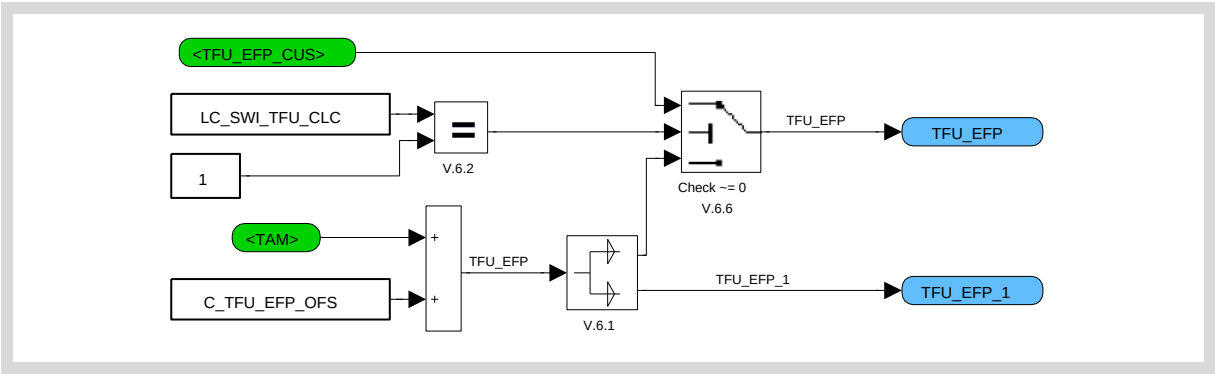

Figure 43.3.7:

43.3.3 Calculation in 100 millisecond recurrence

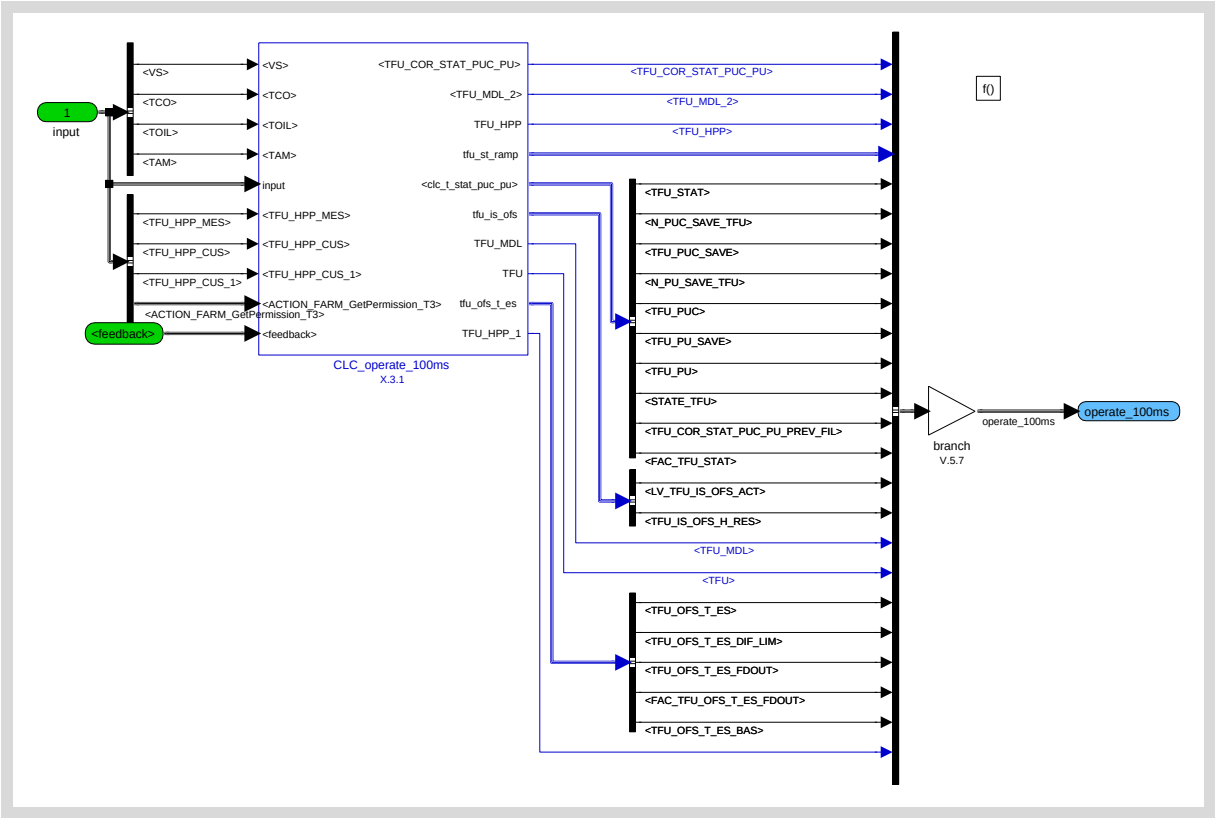

Figure 43.3.8:

Copyright ©Continental AG. Transmittal, reproduction, dissemination and/or editing of this document as well as utilisation of its contents and communication thereof to others without expressed authorisation are prohibited. Offenders will be held liable for payment of damages. All rights created by patent grant or registration of a utility model or design patent are reserved.

43.3.3.1 Calculation and correction of the fuel temperature at injector head

TFU_COR_STAT_PUC_PU is the basic value of the fuel temperature. It is calculated according the three operating states "normal", "pull fuel cut off" and "pull".

This value has to be corrected to compensate the influence of the "vehicle speed", "coolant temperature", "engine warm-up (oil temperature)" and "ignition angle".

The correction is done by adding the accordingly correction value which is extracted from a map.

If an TFU sensor is available TFU is calculated of the sensor value, otherwise the modelled TFU is used.

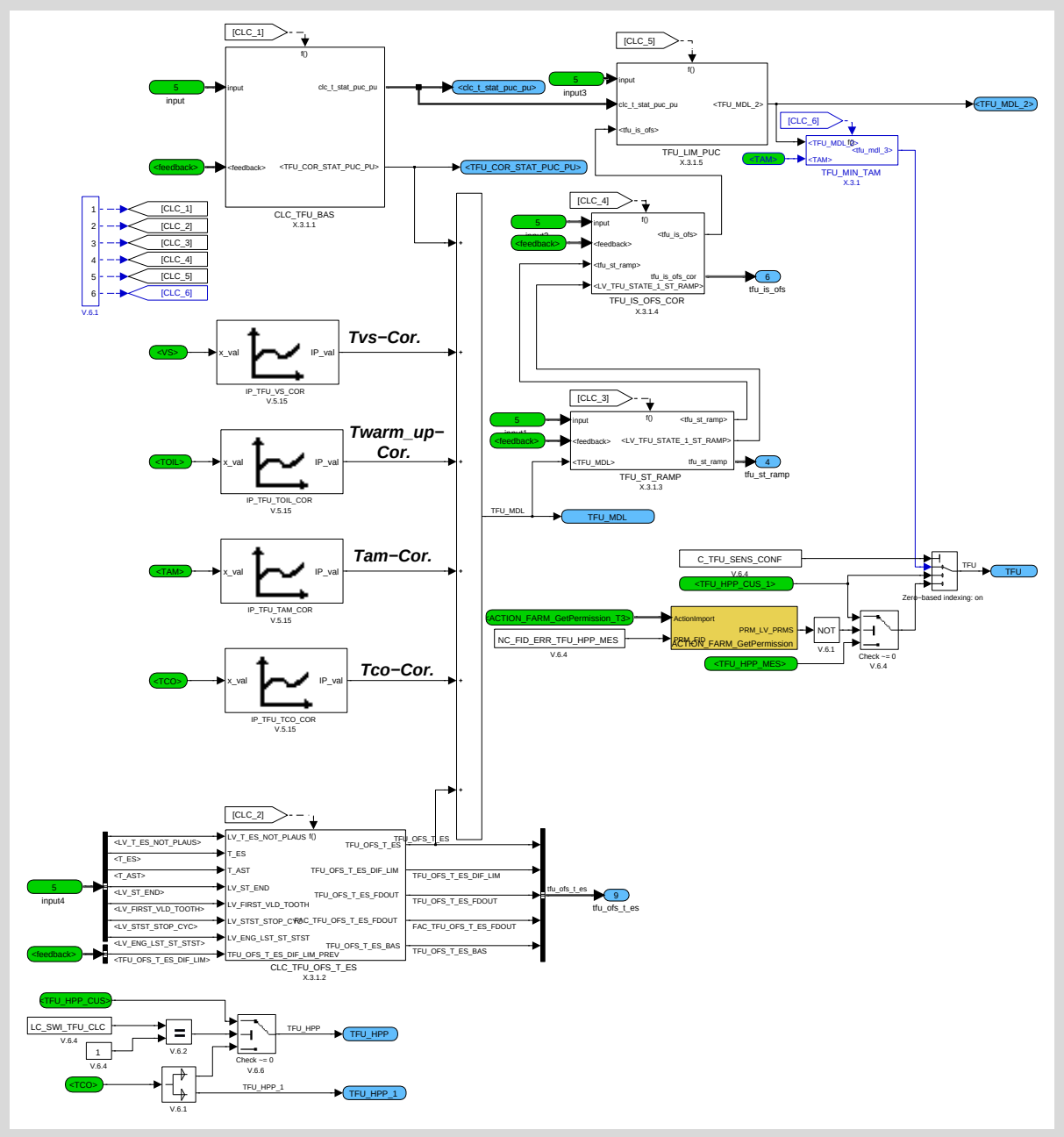

Figure 43.3.9:

Copyright ©Continental AG. Transmittal, reproduction, dissemination and/or editing of this document as well as utilisation of its contents and communication thereof to others without expressed authorisation are prohibited. Offenders will be held liable for payment of damages. All rights created by patent grant or registration of a utility model or design patent are reserved.

43.3.3.1.1 Determination of the basic fuel temperature

The state machine determines which calculation, Static-, PU- or PUC-State, has to be used for the calculation of TFU_COR_STAT_PUC_PU.

The low pass filter avoids jumps of TFU_COR_STAT_PUC_PU which could occur by switching between the different calculation algorithms.

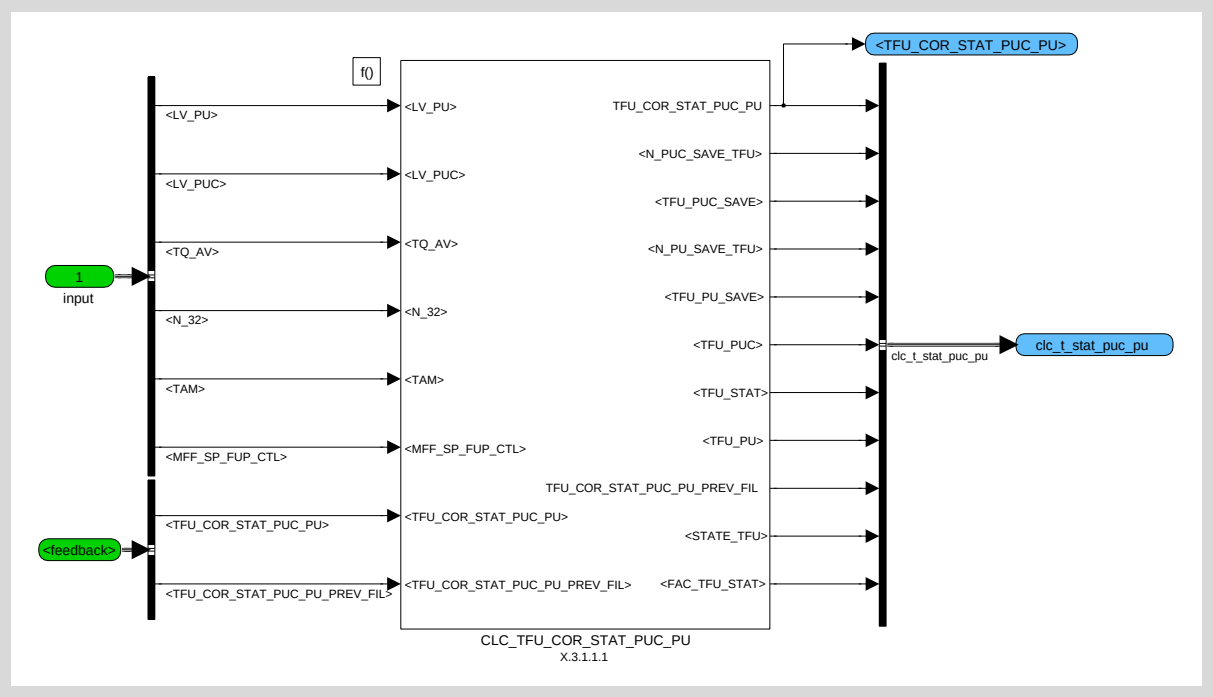

Figure 43.3.10:

Copyright ©Continental AG. Transmittal, reproduction, dissemination and/or editing of this document as well as utilisation of its contents and communication thereof to others without expressed authorisation are prohibited. Offenders will be held liable for payment of damages. All rights created by patent grant or registration of a utility model or design patent are reserved.

43.3.3.1.1.1 Calculation of TFU_COR_STAT_PUC_PU

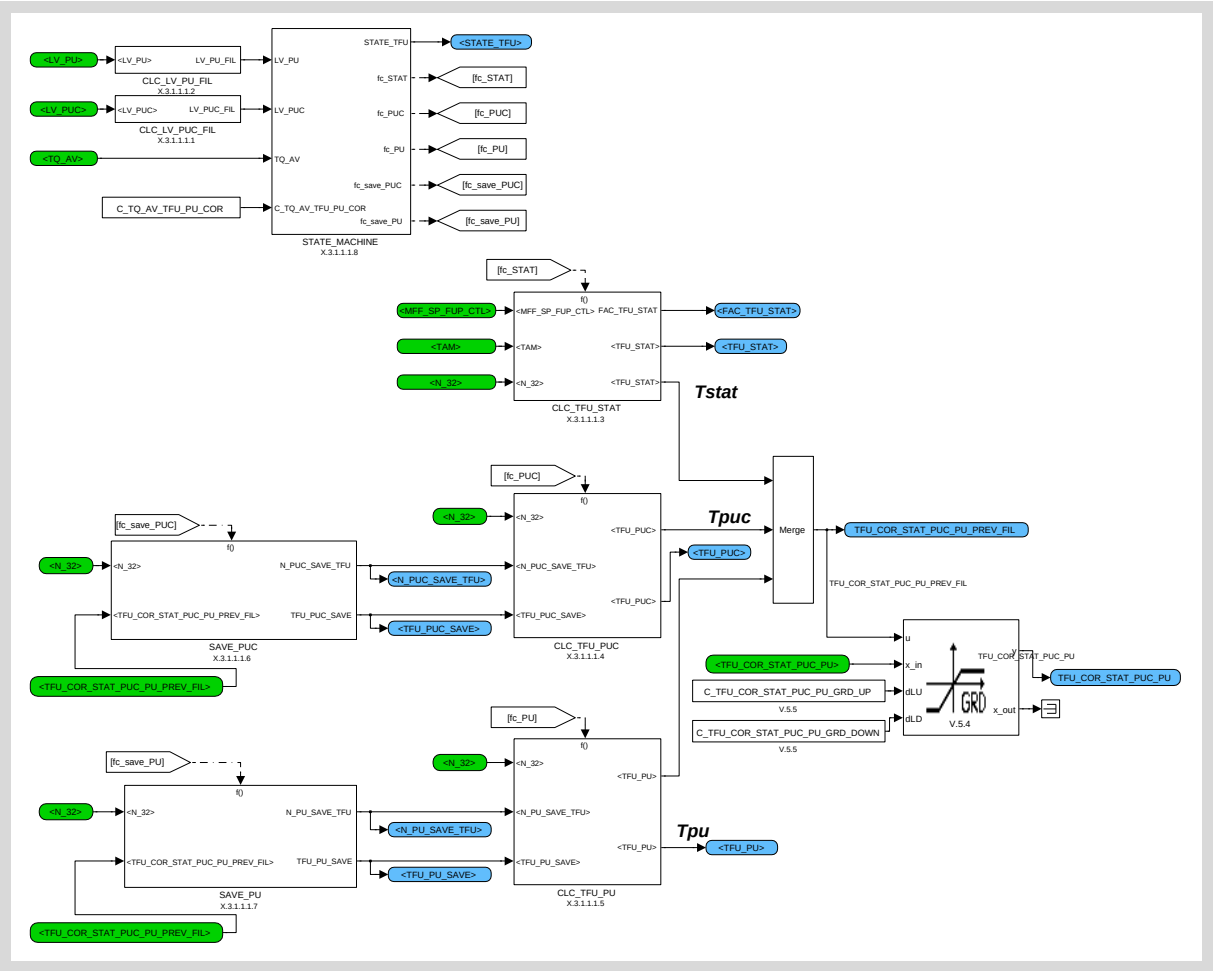

Figure 43.3.11:

43.3.3.1.1.1.1 Filtering of short PUC-Phases

Here the PUC-Label is filtered. Only PUC-Phases of a calibrateable duration are feed into the state machine.

Copyright ©Continental AG. Transmittal, reproduction, dissemination and/or editing of this document as well as utilisation of its contents and communication thereof to others without expressed authorisation are prohibited. Offenders will be held liable for payment of damages. All rights created by patent grant or registration of a utility model or design patent are reserved.

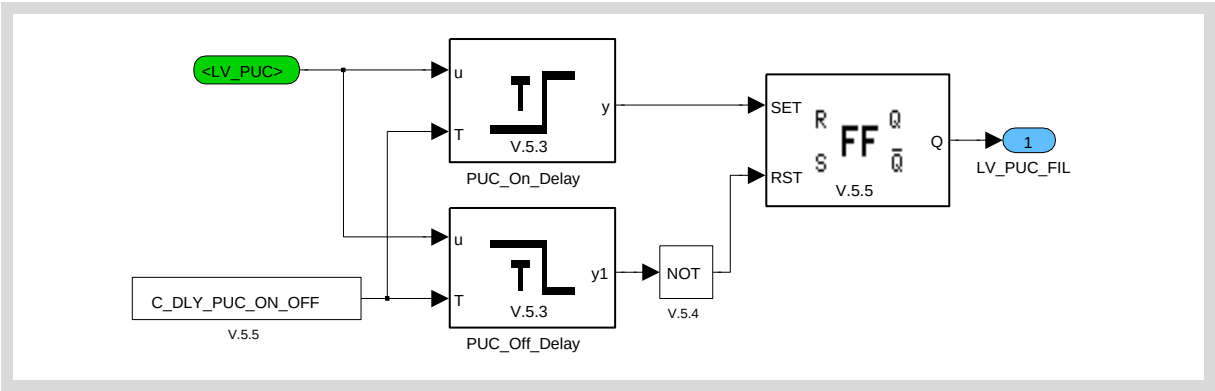

Figure 43.3.12:

43.3.3.1.1.1.2 Filtering of short PU-Phases

Here the PU-Label is filtered. Only PU-Phases of a calibrateable duration are feed into the state machine.

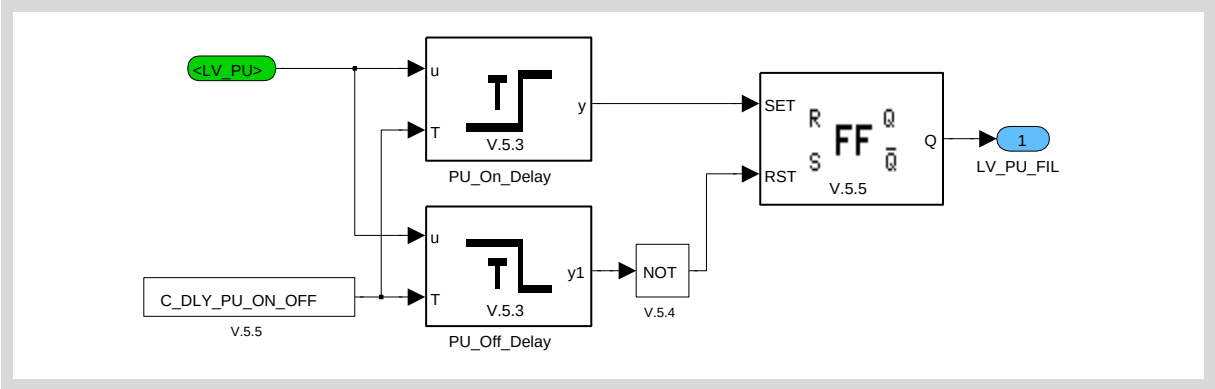

Figure 43.3.13:

43.3.3.1.1.1.3 Calculation of the basic fuel temperature via the hot- and cold map

Here the basic value of the fuel temperature in static operating state is determined. If the values of the map for cold engine and the map for hot engine are equal, the value from the cold map is used.

Via this algorithm a linear interpolation, depending on the ambient air temperature (TAM), between the hot- and cold-map is performed.
The basis for TFU_STAT is the value of the cold-map.
To this value the difference of the hot- and cold-map, which is manipulated before by a TAM depending factor, is added.

Copyright ©Continental AG. Transmittal, reproduction, dissemination and/or editing of this document as well as utilisation of its contents and communication thereof to others without expressed authorisation are prohibited. Offenders will be held liable for payment of damages. All rights created by patent grant or registration of a utility model or design patent are reserved.

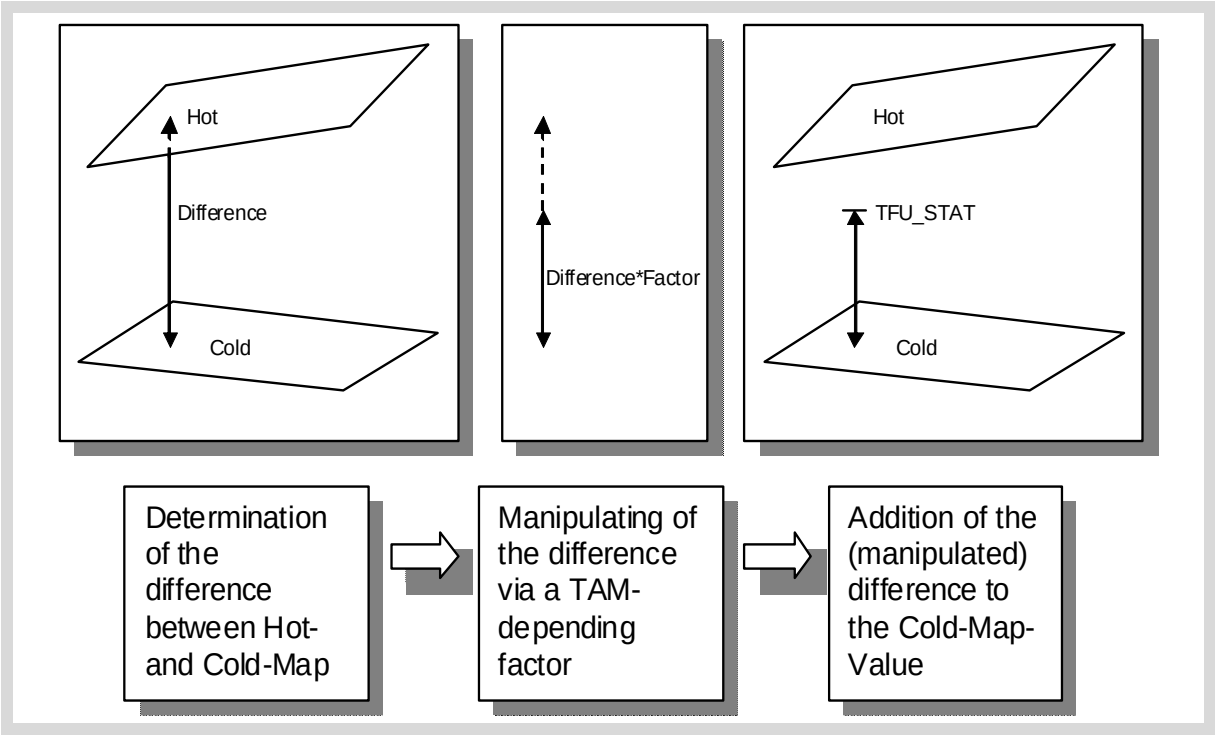

Figure 43.3.14:

Via C_TFU_STAT_STND it can be defined at which ambient air temperature (+ offset) the difference is multiplied with the factor "1" and thereby only the value of the hot-map is used.

Copyright ©Continental AG. Transmittal, reproduction, dissemination and/or editing of this document as well as utilisation of its contents and communication thereof to others without expressed authorisation are prohibited. Offenders will be held liable for payment of damages. All rights created by patent grant or registration of a utility model or design patent are reserved.

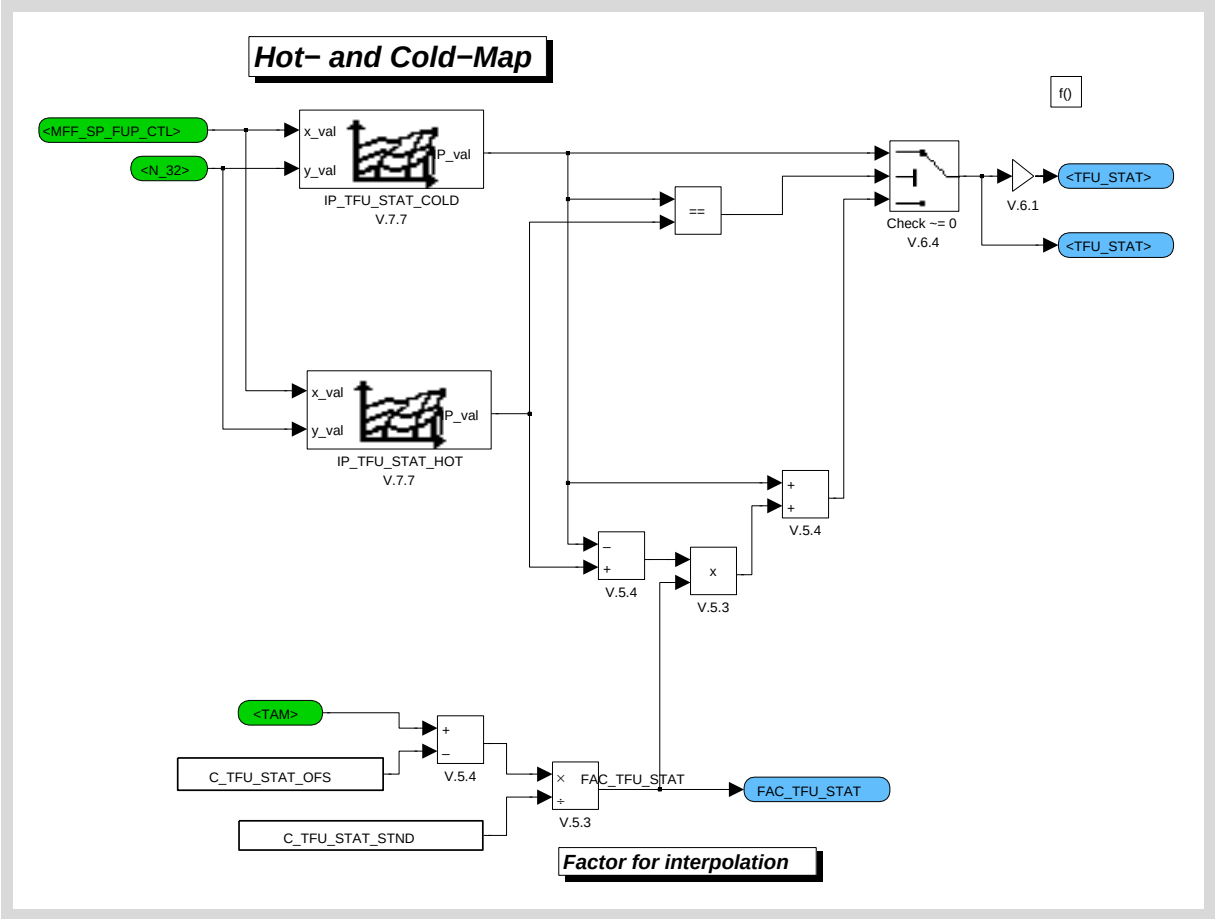

Figure 43.3.15:

43.3.3.1.1.1.4 Calculation of the basic fuel temperature via the PUC-map

At a rising edge of LV_PU or LV_PUC the actual values of engine speed (N_32) and the fuel temperature in static state, PUC or PU (TFU_COR_STAT_PUC_PU_PREV_FIL) are stored by the subfunction "SAVE_PUC". In the following PUC-Phase the former stored values are used to calculate the basic TFU value in PUC operating state (TFU_PUC).

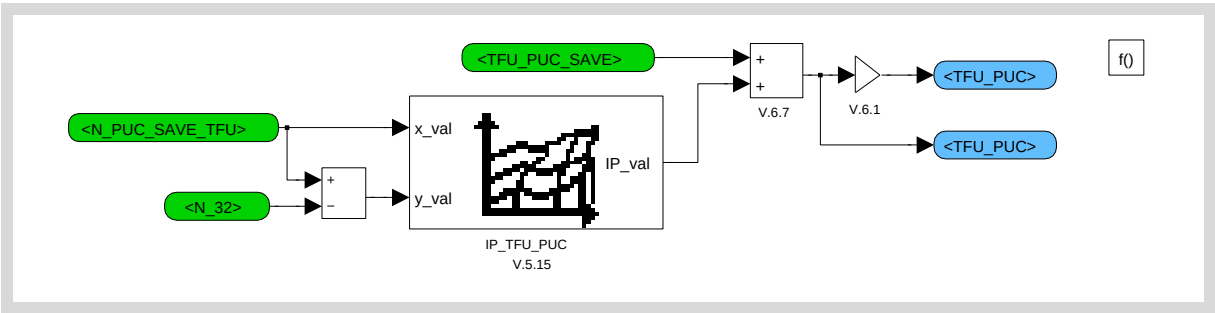

Figure 43.3.16:

Copyright ©Continental AG. Transmittal, reproduction, dissemination and/or editing of this document as well as utilisation of its contents and communication thereof to others without expressed authorisation are prohibited. Offenders will be held liable for payment of damages. All rights created by patent grant or registration of a utility model or design patent are reserved.

43.3.3.1.1.1.5 Calculation of the basic fuel temperature via the PU-map

This calculation is only done if a PU-Phase follows directly after a PUC-Phase.

At (LV_PU and !LV_PUC and TQ_AV > C_TQ_AV_TFU_PU_COR) the actual values of engine speed (N_32) and the fuel temperature in static state, PUC or PU (TFU_COR_STAT_PUC_PU_PREV_FIL) are stored by the subfunction "SAVE_PU". These stored values are used to calculate the basic TFU value in PU operating state (TFU_PU).

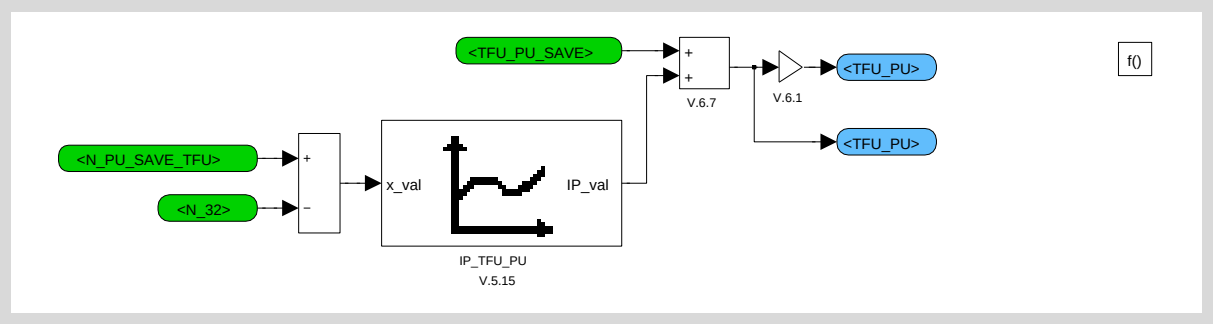

Figure 43.3.17:

43.3.3.1.1.1.6 Storage of the values which are needed for calculation of TFU_PUC

Here the actual values of engine speed (N_32) and the fuel temperature in static state, PUC or PU (TFU_COR_STAT_PUC_PU_PREV_FIL) are stored. These values are used by the calculation of TFU_PUC. This function is triggered by the state machine.

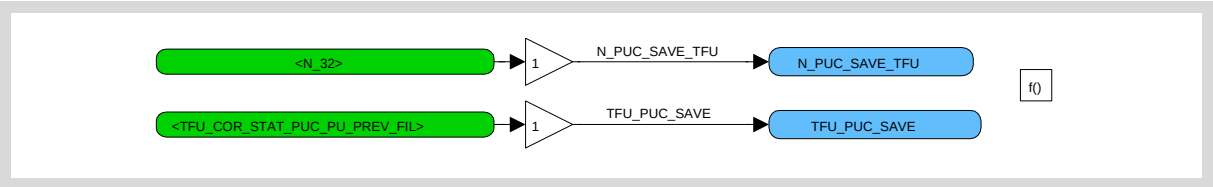

Figure 43.3.18:

43.3.3.1.1.1.7 Storage of the values which are needed for calculation of TFU_PU

Here the actual values of engine speed (N_32) and the fuel temperature in static state, PUC or PU (TFU_COR_STAT_PUC_PU_PREV_FIL) are stored. These values are used by the calculation of TFU_PU. This function is triggered by the state machine.

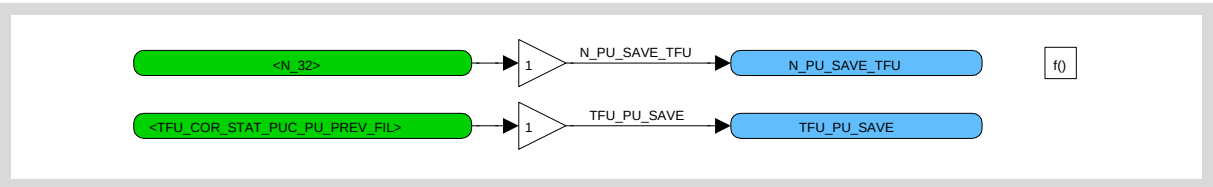

Figure 43.3.19:

Copyright ©Continental AG. Transmittal, reproduction, dissemination and/or editing of this document as well as utilisation of its contents and communication thereof to others without expressed authorisation are prohibited. Offenders will be held liable for payment of damages. All rights created by patent grant or registration of a utility model or design patent are reserved.

43.3.3.1.1.1.8 Determination of usage of Static-, PU- or PUC-Algorithm

Normally the calculation over the hot- and cold-map is used (fc_STAT).

If a PU-Phase occurs (LV_PU == 1) the actual values of engine speed (N_32) and the fuel temperature in static state, PUC or PU (TFU_COR_STAT_PUC_PU_PREV_FIL) are stored by the subfunction "SAVE_PUC". The Calculation over the hot- and cold-map is still used (fc_STAT). The aim is only to store the values for a following PUC-Phase.

If a PUC-Phase occurs (LV_PUC == 1) the calculation via the PUC-map is used (fc_PUC). The need values for the calculation were stored at the entering of a former PU-Phase or directly at entering the PUC-Phase, if no PU-Phase occurred before.
The calculation over the PUC-Map stays active as long as TQ_AV < C_TQ_AV_TFU_PU_COR even if LV_PUC == 0. This is implemented to cover part load phases during a PUC-Phase which are caused by gear shifting.

The calculation via the PU-map (fc_PU) is only used if the PU-phase follows directly after a PUC-phase and TQ_AV > C_TQ_AV_TFU_PU_COR. The need values for the calculation of the PU-Phase are stored at the entering of the PU-Phase by the subfunction SAVE_PU.

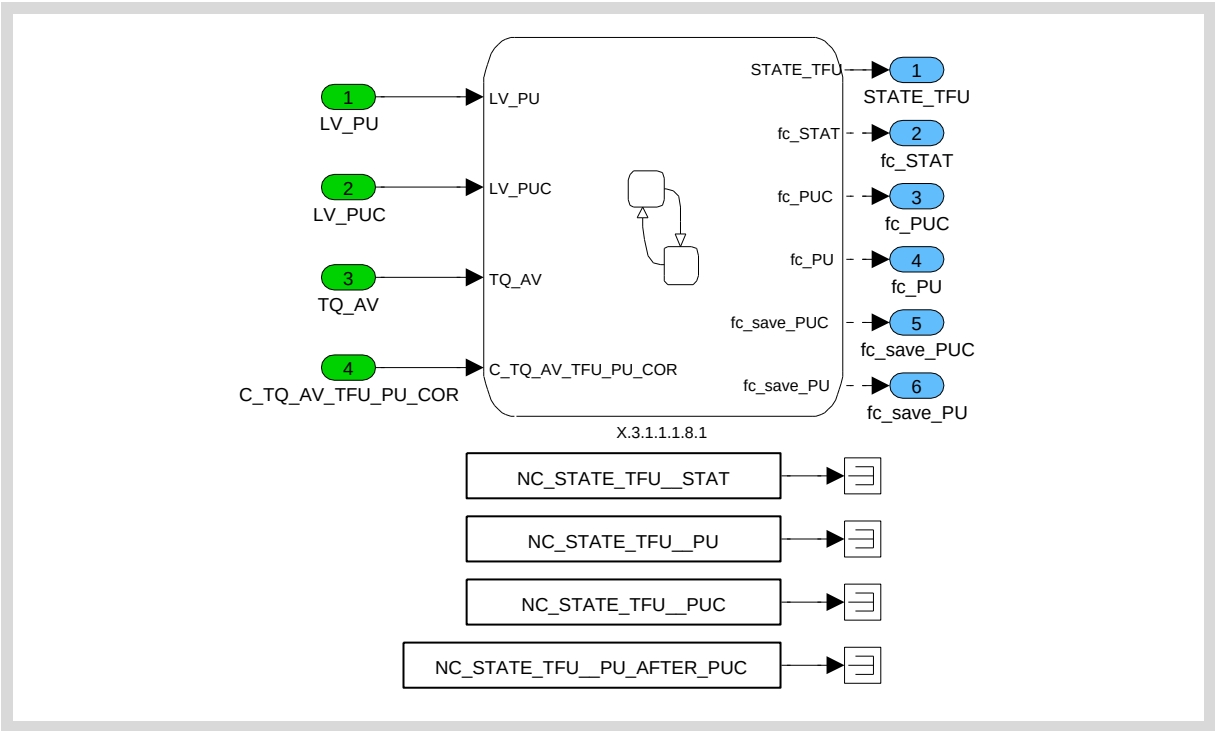

Figure 43.3.20:

Copyright ©Continental AG. Transmittal, reproduction, dissemination and/or editing of this document as well as utilisation of its contents and communication thereof to others without expressed authorisation are prohibited. Offenders will be held liable for payment of damages. All rights created by patent grant or registration of a utility model or design patent are reserved.

43.3.3.1.1.1.8.1 Chart2

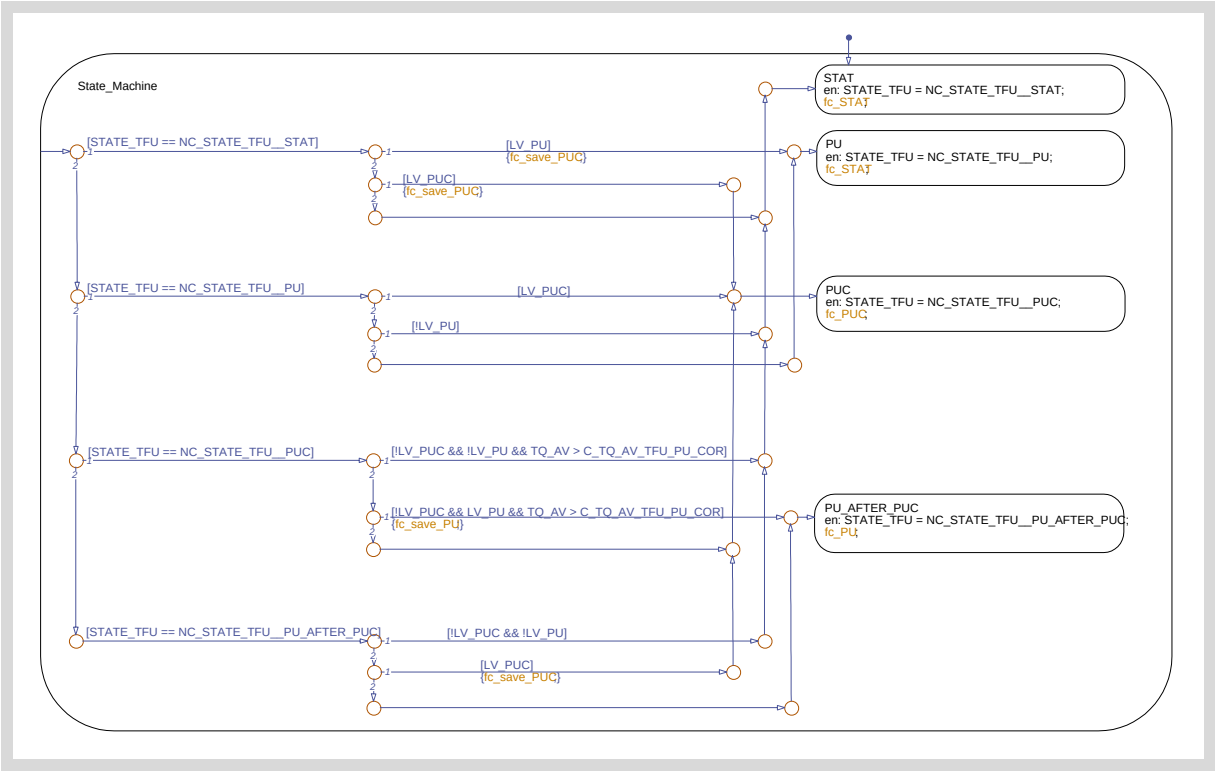

Figure 43.3.21:

43.3.3.1.2 Calculation of T_ES based TFU offset with fade-out based on T_AST

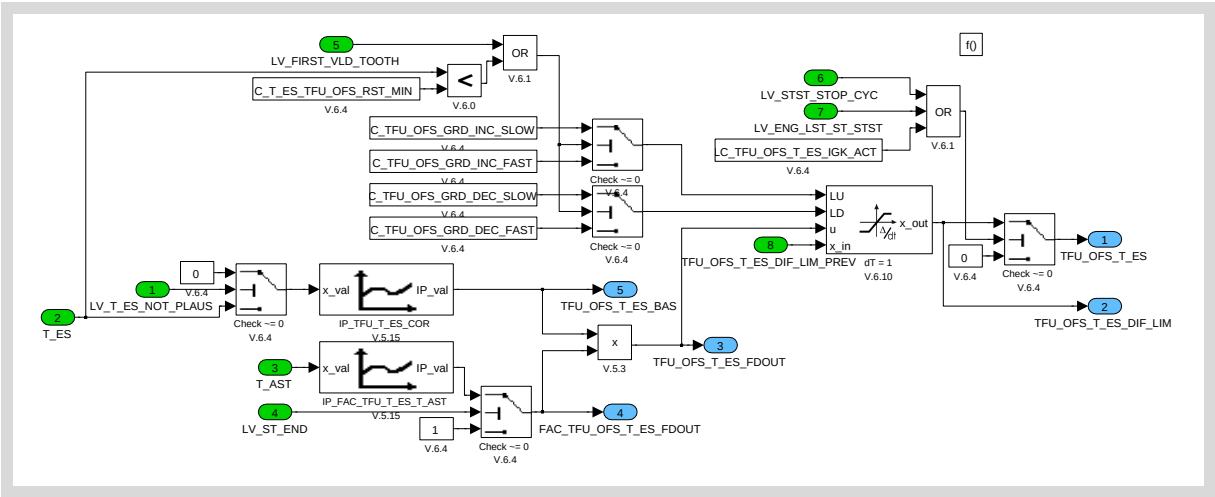

Figure 43.3.22:

Copyright ©Continental AG. Transmittal, reproduction, dissemination and/or editing of this document as well as utilisation of its contents and communication thereof to others without expressed authorisation are prohibited. Offenders will be held liable for payment of damages. All rights created by patent grant or registration of a utility model or design patent are reserved.

43.3.3.1.3 TFU-Correction during start phase

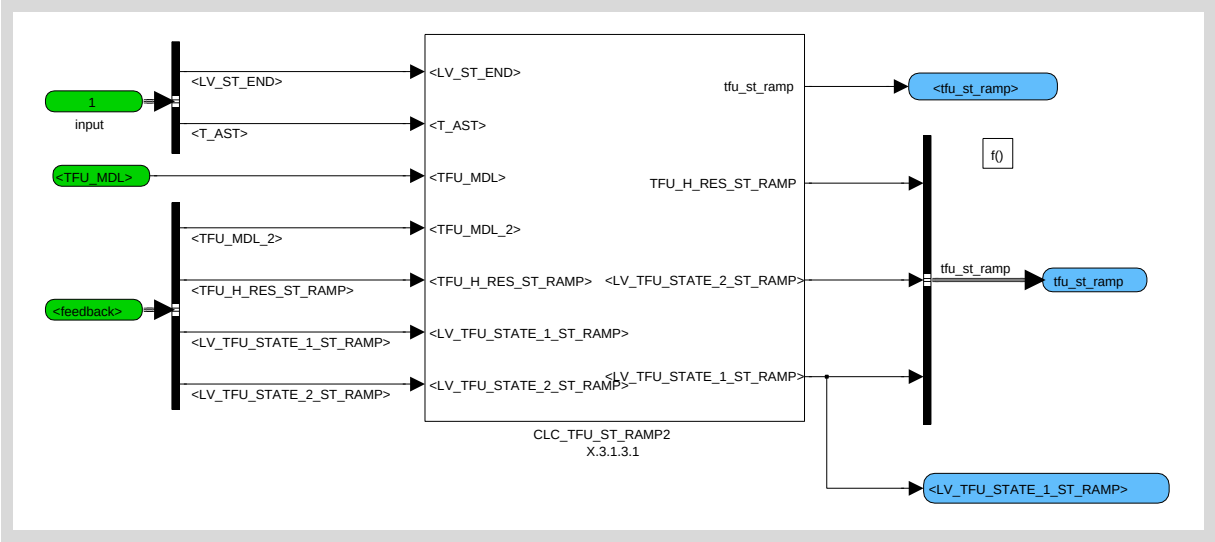

Figure 43.3.23:

43.3.3.1.3.1 Calculation of TFU-Correction during start phase

Calc.-TFU > TCO (before start)
If, before start, Calc.-TFU > TCO then TFU = TCO till engine start.
At and after finished engine start (LV_ST_END == 1) TFU is ramped from TCO to the Calc.-TFU with the increment of C_TFU_COR_INC. If TFU has reached the Calc.-TFU, TFU is always the Calc.-TFU.

Calc.-TFU < TCO (before start)
If, before start, Calc.-TFU < TCO then TFU = Calc.-TFU.

Deactivatin of the function after start phase
C_T_TFU_CLC_ST_END determines at which time after start the start correction is disabled and the TFU value is the calculated TFU value (without any ramping).
Thereby it is avoided that the start correction function can influence the "normal" calculation of the TFU.
If C_T_TFU_CLC_ST_END == 0, the start correction function is completely disabled and TFU is always the calculated value.

Copyright ©Continental AG. Transmittal, reproduction, dissemination and/or editing of this document as well as utilisation of its contents and communication thereof to others without expressed authorisation are prohibited. Offenders will be held liable for payment of damages. All rights created by patent grant or registration of a utility model or design patent are reserved.

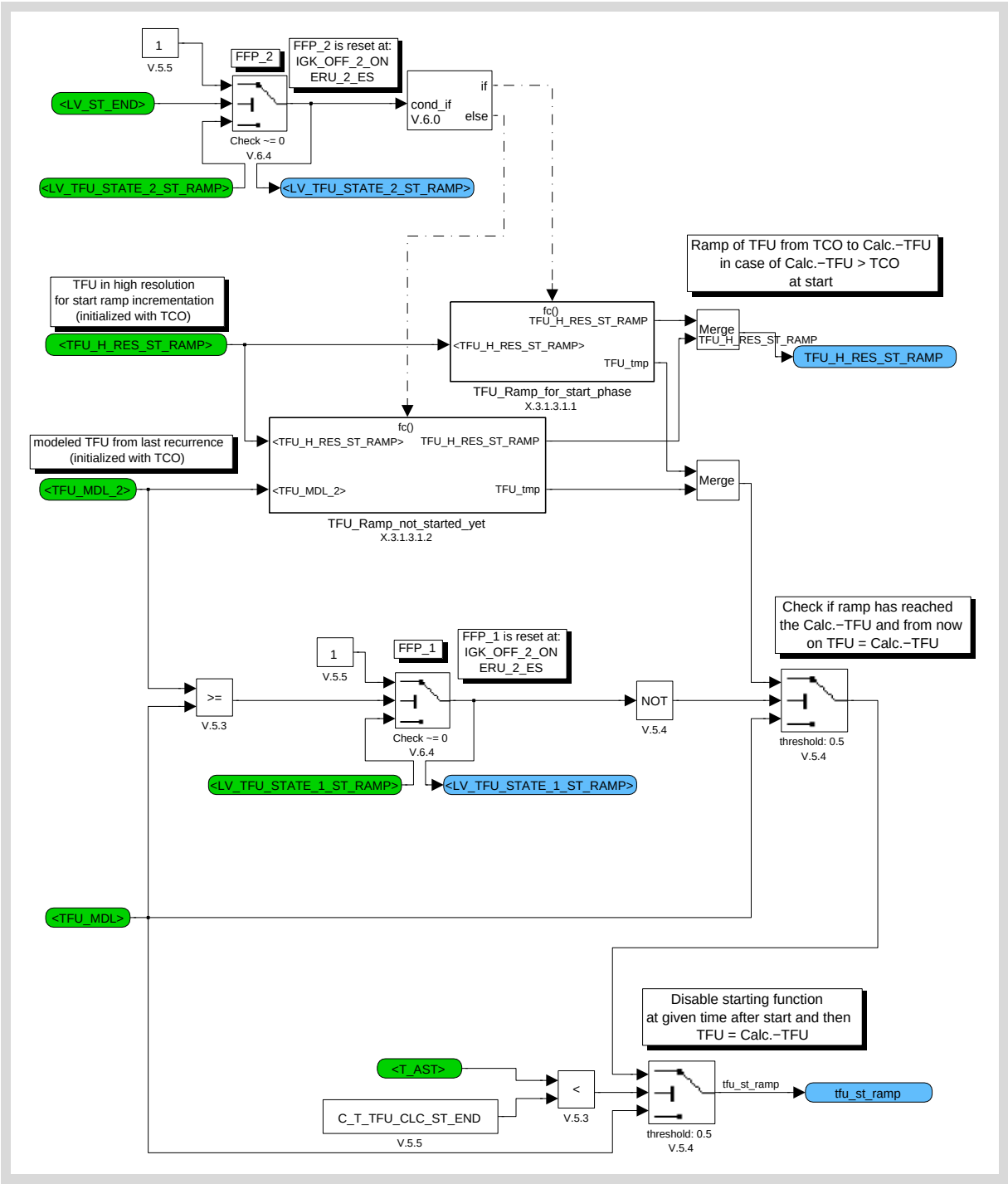

Figure 43.3.24:

43.3.3.1.3.1.1 Ramping active

The ramping is calculated in high resolution. Therefore the variable TFU_H_RES_ST_RAMP with high resolution is created.

By this it is possible to have lower steps than 0.75 °C per recurrence for the ramping.

Copyright ©Continental AG. Transmittal, reproduction, dissemination and/or editing of this document as well as utilisation of its contents and communication thereof to others without expressed authorisation are prohibited. Offenders will be held liable for payment of damages. All rights created by patent grant or registration of a utility model or design patent are reserved.

The picture shows the ramping from 30°C to 36.8°C.
The increment of the TFU_H_RES_ST_RAMP is 0.1 °C per recurrence.

Blue: TFU_H_RES (high resolution)
Green: TFU_TMP (resolution 0.75 °C)

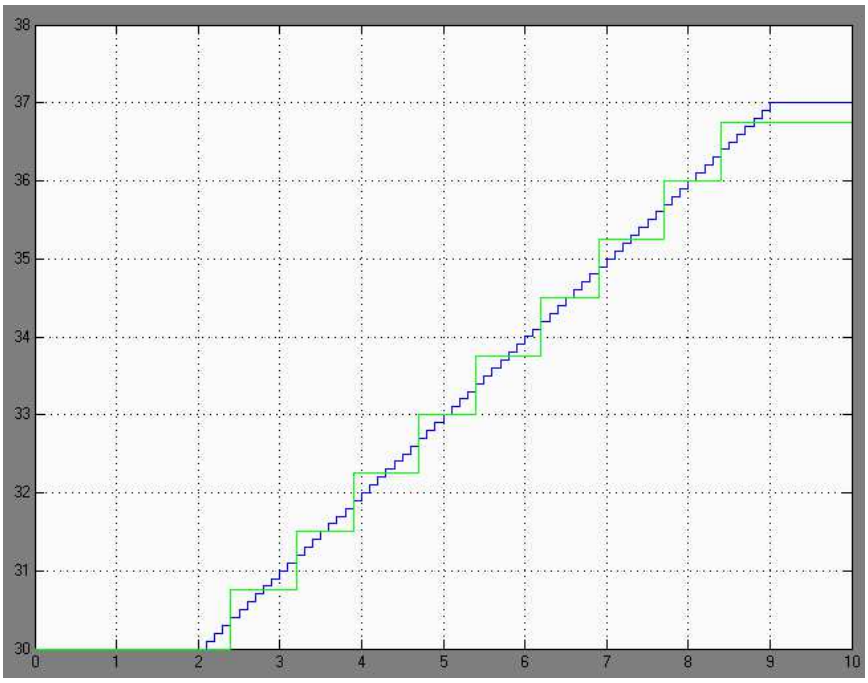

Figure 43.3.25:

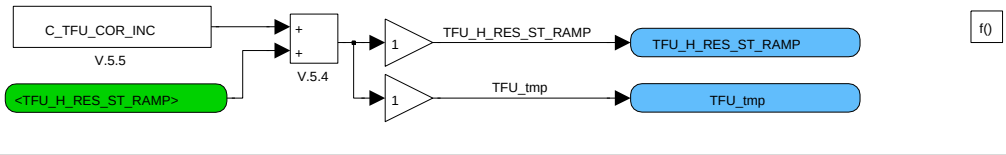

Figure 43.3.26:

Copyright ©Continental AG. Transmittal, reproduction, dissemination and/or editing of this document as well as utilisation of its contents and communication thereof to others without expressed authorisation are prohibited. Offenders will be held liable for payment of damages. All rights created by patent grant or registration of a utility model or design patent are reserved.

43.3.3.1.3.1.2 Ramping not active

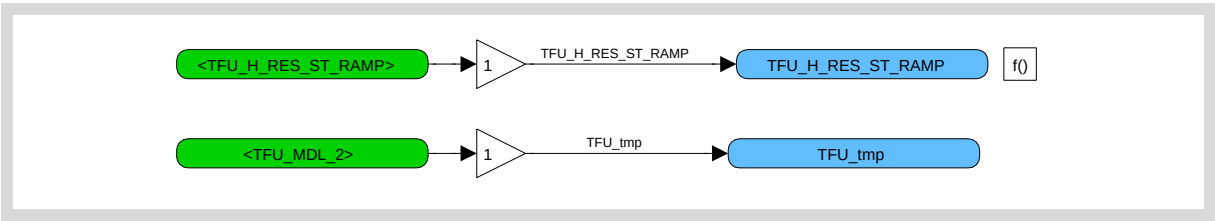

Figure 43.3.27:

43.3.3.1.4 TFU-Correction during idle speed phase

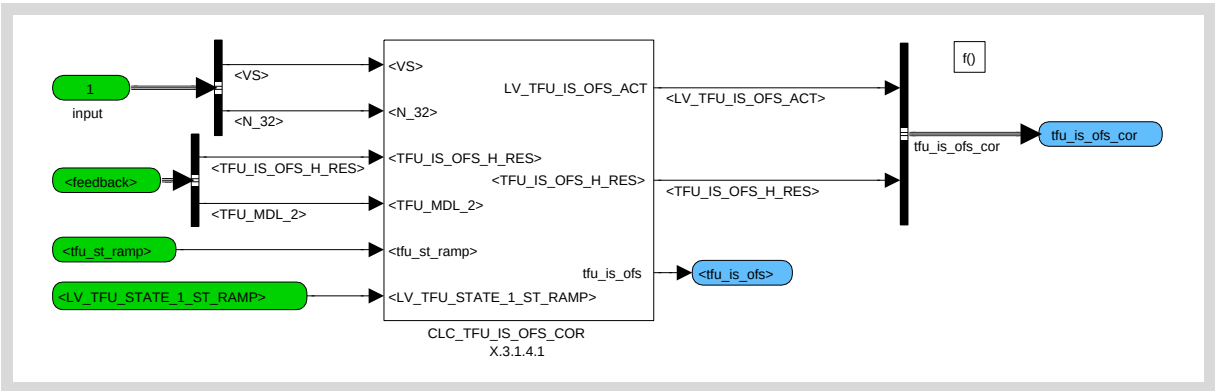

Figure 43.3.28:

43.3.3.1.4.1 Calculation of TFU-Correction during idle speed phase

The TFU correction during idle speed phase is done via an offset.
The value of the offset is ramped-in if the condition of the idle speed correction is fulfilled and the delay time C_TFU_IS_OFS_DLY has elapsed.
The value is limited to an defined max. value.
If the conditions are not fulfilled anymore and the delay time for the ramp out C_TFU_IS_OFS_RAMP_OUT_DLY has elapsed, the offset value is ramped-out till the corrected TFU value has reached the "normal" modeled TFU value again.

Copyright ©Continental AG. Transmittal, reproduction, dissemination and/or editing of this document as well as utilisation of its contents and communication thereof to others without expressed authorisation are prohibited. Offenders will be held liable for payment of damages. All rights created by patent grant or registration of a utility model or design patent are reserved.

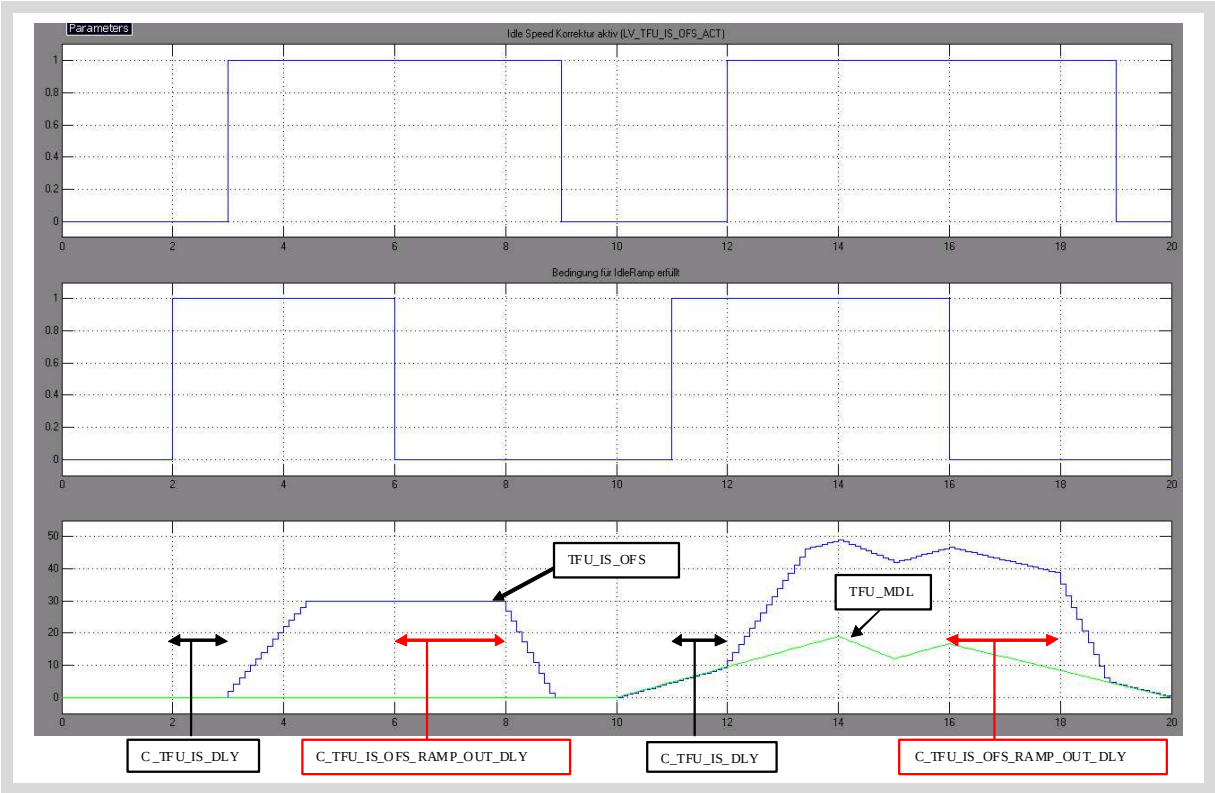

Figure 43.3.29:

Copyright ©Continental AG. Transmittal, reproduction, dissemination and/or editing of this document as well as utilisation of its contents and communication thereof to others without expressed authorisation are prohibited. Offenders will be held liable for payment of damages. All rights created by patent grant or registration of a utility model or design patent are reserved.

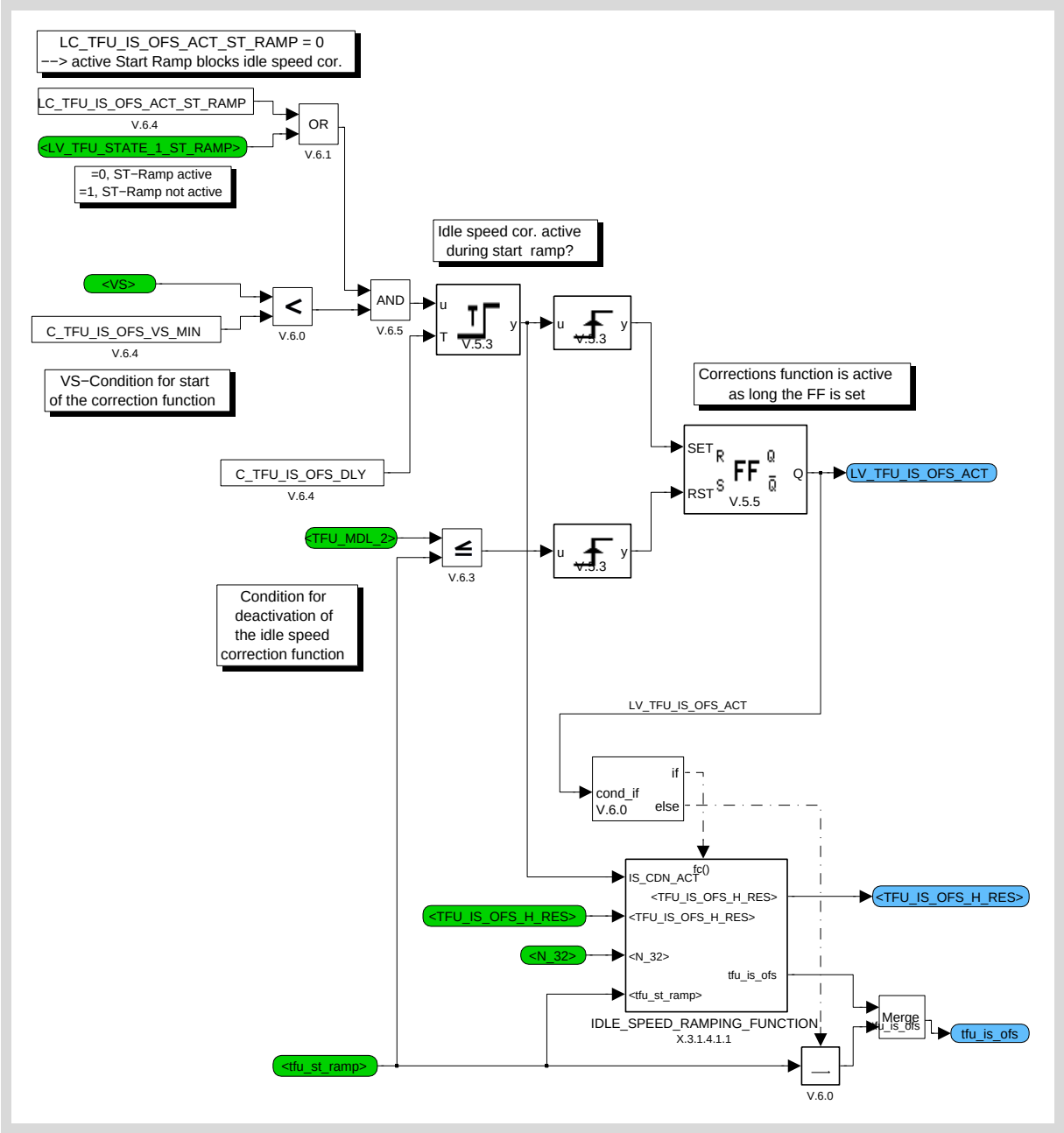

Figure 43.3.30:

43.3.3.1.4.1.1 Calculation and adding of the offset

The offset value is incremented and limited if the condition for the correction is fulfilled.
If the condition is no more fulfilled, the offset value is decremented and the influence of the correction is ramped-out.
The calculation of the offset is done in high resolution.

Copyright ©Continental AG. Transmittal, reproduction, dissemination and/or editing of this document as well as utilisation of its contents and communication thereof to others without expressed authorisation are prohibited. Offenders will be held liable for payment of damages. All rights created by patent grant or registration of a utility model or design patent are reserved.

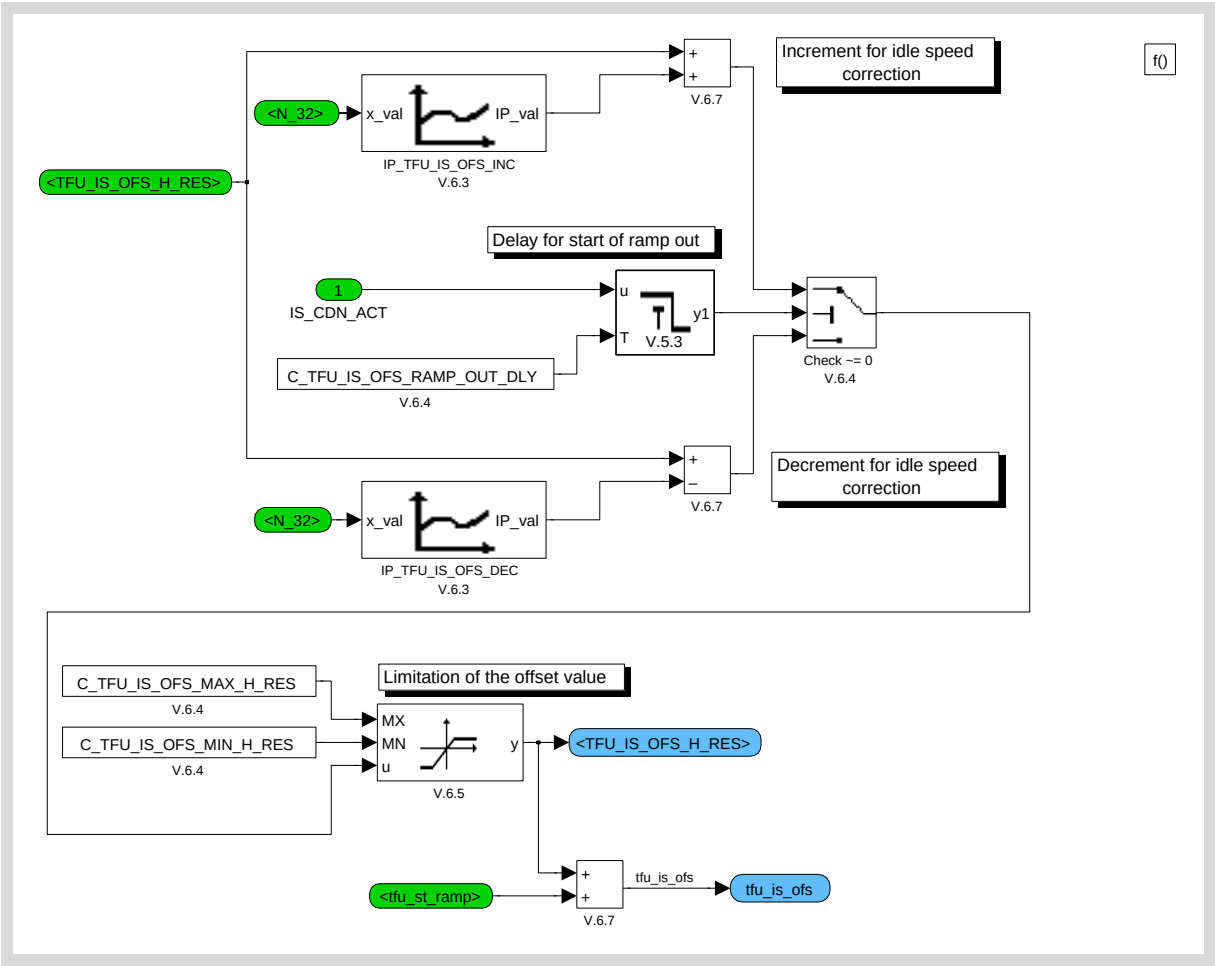

Figure 43.3.31:

43.3.3.1.5 Limitation of Fuel Temperature in case of PUC operating state

In case of PUC operating state the fuel heating is limited to the minimum of coolant temperature and the stored value of TFU_COR_STAT_PUC_PU.

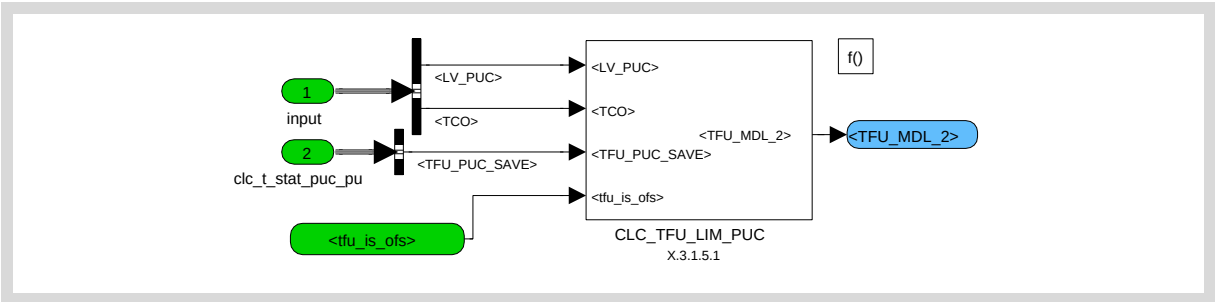

Figure 43.3.32:

Copyright ©Continental AG. Transmittal, reproduction, dissemination and/or editing of this document as well as utilisation of its contents and communication thereof to others without expressed authorisation are prohibited. Offenders will be held liable for payment of damages. All rights created by patent grant or registration of a utility model or design patent are reserved.

43.3.3.1.5.1 Calculation of final TFU model output (TFU_MDL_2)

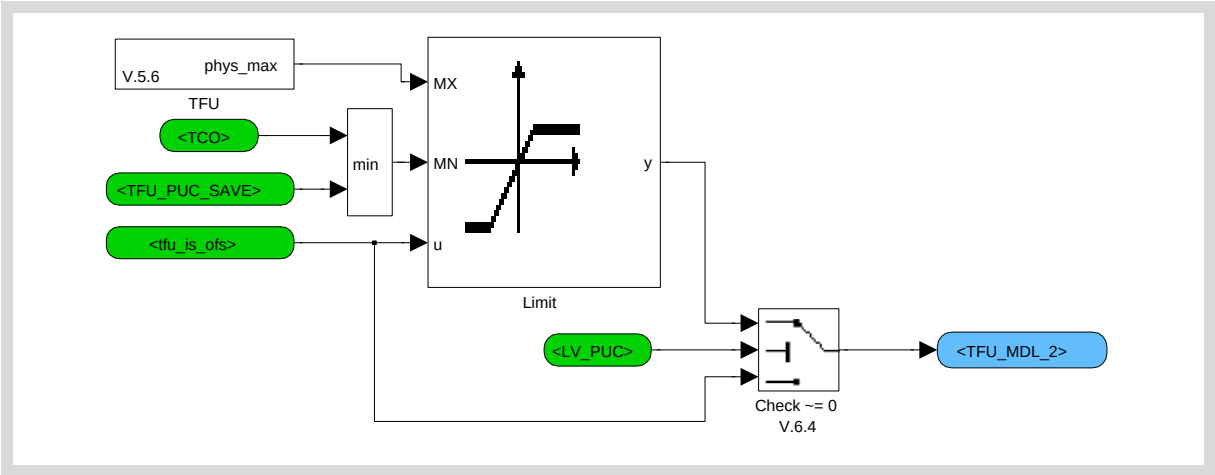

Figure 43.3.33:

43.3.3.1.6 Minimum limitation of fuel temperature by ambient air temperature

If the ambient air temperature is above a threshold, then this threshold limits the minimum fuel temperature, else the ambient air temperature limits the minimum fuel temperature.

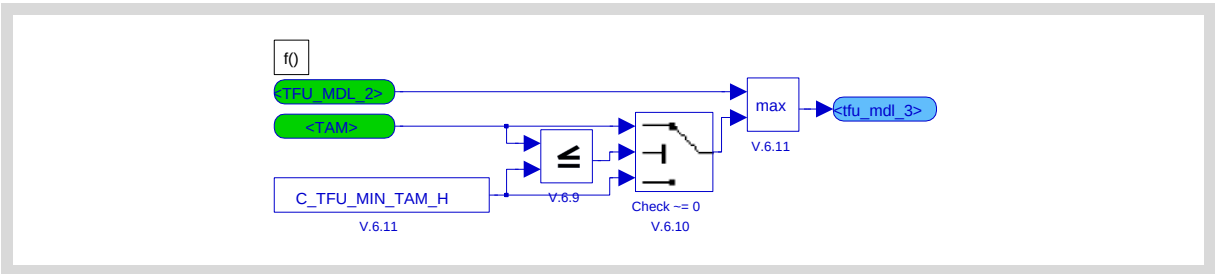

Figure 43.3.34:

Copyright ©Continental AG. Transmittal, reproduction, dissemination and/or editing of this document as well as utilisation of its contents and communication thereof to others without expressed authorisation are prohibited. Offenders will be held liable for payment of damages. All rights created by patent grant or registration of a utility model or design patent are reserved.

43.4 Fuel temperature (Appl. Inc.)

▶ Data Definition

Name	Mode	Coded Limits	Display Limits	Resolution	Unit
B_getankt	O/V	0... 1H	0 ...1	1	-
Bedingung Tankvorgang erkannt					
B_rzttmbks	V	0... 1H	0 ...1	1	-
Bed. Reset der Filterzeitkonstanten im Temperaturmodell BKS					
B_stend_kl15	V	0... 1H	0 ...1	1	-
Bedingung (Erst)startende oder Klemme 15=ein					
B_stendre	V	0... 1H	0 ...1	1	-
Bed. Startende rising edge					
B_tfstausw	O/V	0... 1H	0 ...1	1	-
Bed. Tankfüllstand wird ausgewertet					
B_tmbkser	O/V	0... 1H	0 ...1	1	-
Bed. Fehler im Temperaturmodell BKS					
B_tmodbksc	V	0... 1H	0 ...1	1	-
Bed. Temp. Modell BKS in diesem Zyklus mindestens einmal gerechnet					
B_tmodini	V	0... 1H	0 ...1	1	-
Bedingung Nachinitialisierung unmittelbar nach Klemme15=ein abgeschlossen					
B_tmtobks	V	0... 1H	0 ...1	1	-
Bed. Umschaltung tmot oder max- Auswahl zwischen tmot und tolc					
B_tospgpl	V	0... 1H	0 ...1	1	-
Gültigkeit des Ölsumpfsensor-Signals verzögert um Entprellzeit TTOSPGPL					
B_tumgfili	V	0... 1H	0 ...1	1	-
Bed. Tiefpassfilterung von tumg in der BKS initialisieren					
B_zttmgr	V	0... 1H	0 ...1	1	-
Bedingung Zeitkonstante groß für Nachstartphase					
dttankst	V	0... FFH	0... 189.9898052216	0.74505806	°C
Deltatemperatur zwischen aktueller Tanktempratur und Tanktemperatur im Start					
fabstbks	V	8000... 7FFFH	-2... 1.999938964844	61.0352e-6	-
Wichtungsfaktor für die Abstellzeit BKS					
fazbksy_w	V	0... FE00H	-48... 142.5	0.00292969	°C
y-Eingangswert von Kennfeld KFFAZBKS					
ffwkbks	V	0... FFH	0... 3.984375	0.015625	-
Bewertungsfaktor Kühlung durch Fahrtwind					
fkmpifl	V	8000... 7FFFH	-250... 249.9923706055	0.00762939	-
Faktor MPI-Durchflussmenge nachfliessender Kraftstoff.					
kfflafincor	V	0... FFFFH	0... 15.624761581e3	0.23841858	g/min
Kraftstoffmassenstrom, schubabschalt- und MPI-Massenstrom-korrigiert.					
tcompmpi	V	0... FFH	-48... 143.25	0.75	°C
modellierte Bauraumtemperatur nahe MPI-Rail.					
tdiffbks_w	V	8000... 7FFFH	-24414.0625... 24.413317442e3	0.74505806	°C
Temperaturdifferenz Motor zu Umgebung					

Copyright ©Continental AG. Transmittal, reproduction, dissemination and/or editing of this document as well as utilisation of its contents and communication thereof to others without expressed authorisation are prohibited. Offenders will be held liable for payment of damages. All rights created by patent grant or registration of a utility model or design patent are reserved.

Name	Mode	Coded Limits	Display Limits	Resolution	Unit
tdiffmpi	V	FEF6... 10AH	-199.5 ...199.5	0.75	°C
Temperaturdifferenz MPI für nachfliessenden Kraftstoff.					
teitaa	V	0... FFH	0... 189.9898052216	0.74505806	°C
Temperatureintrag in den Tank durch Abgasanlege					
teitaar	V	0... FFH	0... 189.9898052216	0.74505806	°C
Temperatureintrag in den Tank durch Abgasanlage roh					
tfltmpi	V	1... FFFFH	0.1... 6553.5	0.1	s
Filterzeitkonstante für MPI-Temperatur-Filter.					
tflvmpi	O/V	0... FFH	-48... 143.25	0.75	°C
modellierte Kraftstofftemperatur vor MPI-Rail.					
tflvrhdp	O/V	0... FFH	-48... 143.25	0.75	°C
Temperatur Kraftstoff vor HDP					
tfstvz	O/V/S	0... FFH	0... 255	1	l
Tankfüllstand vorheriger Zyklus					
tfuelmx	O/V	0... FFH	-48... 143.25	0.75	°C
Maximale Kraftstofftemperatur im System auf ND-Seite					
tfvuradtbks	V	0... FFH	-48... 143.25	0.75	°C
Temperatureintrag durch Lüfteransteuerung, Fahrzeuggeschwindigkeit, Umgebungstemp. und Kühlerjalousie					
tkadifbks	V	0... FFH	-48... 143.25	0.75	°C
gewichtete Temperaturdifferenz zwischen tmot und tflvrhdp des letzten Zyklus					
tkast	V	0... FFH	-48... 143.25	0.75	°C
Temperatur am Kühleraustritt bei Start					
tkatubks	V	0... FFH	-48... 143.25	0.75	°C
Temperaturdifferenz Kühleraustritt bei Start und Umgebung					
tksvhdpabs	O/V/S	0... FFH	-48... 143.25	0.75	°C
Kraftstofftemperatur BKS bei Motorstop					
tksvmpiabs	O/V/S	0... FFH	-48... 143.25	0.75	°C
Abstelltemperatur für Kraftstoff vor MPI-Rail					
tktm	O/V	0... FFH	-48... 143.25	0.75	°C
Tanktemperatur modelliert					
tmotbks	V	0... FFH	-48... 143.25	0.75	°C
Motortemperatur für Tempmodell BKS					
tmotbksabs	O/V/S	0... FFH	-48... 143.25	0.75	°C
Motortemperatur BKS bei Motorstop					
trohvhdp	V	0... FFH	-48... 143.25	0.75	°C
Temperatur vor HDP ungefiltert					
trohvhdpvz	V	0... FFH	-48... 143.25	0.75	°C
Temperatur vor HDP ungefiltert vorheriger Wert					
trohvmpi	V	0... FFH	-48... 143.25	0.75	°C
Rohtemperatur Kraftstoff vor MPI-Rail.					
tstbks	V	0... FFH	-48... 143.25	0.75	°C
Temperatur desKraftstoffsystem im Start					
ttankabs	O/V/S	0... FFH	-48... 143.25	0.75	°C
Tanktemperatur aus BKS bei Abstellen					
ttankbks	V	0... FFH	-48... 143.25	0.75	°C

Copyright ©Continental AG. Transmittal, reproduction, dissemination and/or editing of this document as well as utilisation of its contents and communication thereof to others without expressed authorisation are prohibited. Offenders will be held liable for payment of damages. All rights created by patent grant or registration of a utility model or design patent are reserved.

Name	Mode	Coded Limits	Display Limits	Resolution	Unit
modellierte Tanktemperatur					
tumgtbks	V	0... FFH	-48... 143.25	0.75	°C
Umgebungstemperatur für T-Modell BKS					
zttm_w	V	1... FFFFH	0.1... 6553.5	0.1	s
Filterzeitkonstante Niederdruckerfassung					

Input Data

B_fstcanok {p. 11943}	B_hst {p. 11943}	B_kl15 {p. 11943}	B_sshev {p. 12095}
B_stend {p. 11944}	B_stendz {p. 11944}	B_tabstv {p. 11944}	B_tfstok {p. 11944}
B_tmmn {p. 11944}	B_tospg {p. 11944}	B_tumnpl {p. 11944}	dmkrhdev_w {p. 11944}
dmkrmpi_w {p. 11944}	E_tmbkser {p. 11944}	kfflafin_w {p. 12097}	lepwmfan {p. 11944}
LV_EFP_WKU {p. 12097}	RadBli_rActr_VW	RadBli_rActr_VW_SC	RadBli_vCmptmt_VW {p. 2872}
RadBli_vCmptmt_VW_SC	SY_MPI {p. 11813}	tabst_w {p. 11945}	tanhkm_w {p. 11945}
tans {p. 11945}	tfst {p. 11945}	tka {p. 11945}	tmot {p. 11945}
tnse_w {p. 11945}	tnsez_w {p. 11945}	tosp {p. 11945}	tumg {p. 11945}
vfzg_w {p. 11945}			

Calibration Data

Name	Mode	Coded Limits	Display Limits	Resolution	Unit
CWBKS3	-	0... FFH	0... 255	1	-
Codewort 3 für BKS					
CWTMODBKS	V	0... FFH	0... 255	1	-
Codewort für %TMODBKS					
CWTMODBKS2	V	0... FFH	0... 255	1	-
Codewort 2 für %TMODBKS					
CWTMODBKS3	V	0... FFH	0... 255	1	-
Codewort 3 für %TMODBKS					
DMKRTBKS	V	0... FFFFH	0... 15.624761581e3	0.23841858	g/min
Kraftstoffördermenge Grenzwert für Umschaltung von tmot auf tosp					
KFCOMPMPI	V	0... FFH	-48... 143.25	0.75	°C
LDP_KFCOMPMPI_X	5	0... FFH	-48... 143.25	0.75	°C
LDP_KFCOMPMPI_Y	5	0... FFH	-48... 143.25	0.75	°C
Kennfeld fuer Bauteiltemperatur MPI-Rail abh. von Ansaugluft- und Motortemperatur					
KFFANTBKS	V	0... FFH	-48... 143.25	0.75	°C
LDP_KFFANTBKS_x	6	0... FFH	-48... 143.25	0.75	°C
LDP_KFFANTBKS_y	6	0... FFFFH	0... 511.9921875	0.0078125	km/h

Copyright ©Continental AG. Transmittal, reproduction, dissemination and/or editing of this document as well as utilisation of its contents and communication thereof to others without expressed authorisation are prohibited. Offenders will be held liable for payment of damages. All rights created by patent grant or registration of a utility model or design patent are reserved.

Name	Mode	Coded Limits	Display Limits	Resolution	Unit
Kühlwirkung aus Durchströmungsgeschwindigkeit und Umgebungs- bzw. Kraftstoffetemp.-Umgebungstemp.					
KFFAZBKS	V	0... FFFFH	-2... 1.999938964844	61.0352e-6	-
LDP_KFFAZBKS_x	7	0... FFFFH	0... 65535	1	s
LDP_KFFAZBKS_y	5	0... FE00H	-48... 142.5	0.00292969	°C
Kennfeld Faktor Wichtung der Abstellzeit und Abstelltemperatur für Initialisierung des Kraftstofftemperaturmodell					
KFFKMPIFL	V	0... FFFFH	-250... 249.9923706055	0.00762939	-
LDP_KFFKMPIFL_X	8	0... FFFFH	0... 15.624761581e3	0.23841858	g/min
LDP_KFFKMPIFL_Y	5	0... FFH	-48... 143.25	0.75	°C
Kennfeld Wichtungsfaktor für Kühlwirkung des in die MPI-Leitung nachfliessenden Kraftstoffs					
KFFLTMPI	V	1... FFFFH	0.1... 6553.5	0.1	s
LDP_KFFLTMPI_x	8	0... FFFFH	0... 15.624761581e3	0.23841858	g/min
LDP_KFFLTMPI_y	7	FEF6... 10AH	-199.5 ...199.5	0.75	°C
Kennfeld zur Bestimmung der Filterzeitkonst. tfltmpi.					
KFINITMPI	V	0... FFFFH	-2... 1.999938964844	61.0352e-6	-
LDP_KFINITMPI_X	5	0... FFFFH	0... 65535	1	s
LDP_KFINITMPI_Y	5	0... FFH	-48... 143.25	0.75	°C
Kennfeld zur Initialisierung der Kraftstofftemperatur vor MPI-Rail					
KFKNKSSK	V	0... FFH	0... 3.984375	0.015625	-
LDP_KFKNKSSK_x	5	0... FFH	-48... 143.25	0.75	°C
LDP_KFKNKSSK_y	7	0... FFFFH	0... 15.624761581e3	0.23841858	g/min
Kennfeld Bewertungsfaktor Kühlung durch nachfließenden Kraftstoff Schubabschaltungs korrigiert					
KFMPICOR	V	0... FFH	-48... 143.25	0.75	°C
LDP_KFMPICOR_X	5	0... FFH	-48... 143.25	0.75	°C
LDP_KFMPICOR_Y	5	0... FFH	-48... 143.25	0.75	°C
Korrekturkennfeld für MPI-Rail-Temperatur in Abh. von Ansaugluft- und Umgebungstemperatur					
KFTETK	V	0... FFFFH	0... 48.827379942e3	0.74505806	°C
LDP_KFTETK_x	5	0... FFFFH	0... 511.9921875	0.0078125	km/h
LDP_KFTETK_y	5	0... FFFFH	-273.156911135 ...1.2526987121e3	0.02328306	°C
Kennfeld Temperatureintrag in den Tank					
KFVFTBKS	-	0... FFFFH	0... 511.9921875	0.0078125	km/h
LDP_KFVFTBKS_X	6	0... FFFFH	0... 511.9921875	0.0078125	km/h
LDP_KFVFTBKS_Y	6	0... FFH	0... 99.609375	0.390625	%
Durchströmungsgeschwindigkei					
KFZTST	V	1... FFFFH	0.1... 6553.5	0.1	s
LDP_KFZTST_x	5	0... FFH	-48... 143.25	0.75	°C
LDP_KFZTST_y	5	0... FFFFH	0... 6553.5	0.1	s
Kennfeld für Filterzeitkonstante in der (Nach)startphase					
KFZTTMM	V	1... FFFFH	0.1... 6553.5	0.1	s
LDP_KFZTTMM_x	7	8000... 7FFFH	-24414.0625... 24.413317442e3	0.74505806	°C
LDP_KFZTTMM_y	9	0... FFFFH	0... 15.624761581e3	0.23841858	g/min
Kennfeld Zeitkonstante für Tiefpassfilter tflvrhdp_LT					

Copyright ©Continental AG. Transmittal, reproduction, dissemination and/or editing of this document as well as utilisation of its contents and communication thereof to others without expressed authorisation are prohibited. Offenders will be held liable for payment of damages. All rights created by patent grant or registration of a utility model or design patent are reserved.

Name	Mode	Coded Limits	Display Limits	Resolution	Unit
KLDTKABKS	V	0... FFH	-48... 143.25	0.75	°C
LDP_KLDTKABKS_x	8	0... FFH	-48... 143.25	0.75	°C
Kennlinie delta tka in Abhängigkeit der Umgebungstemperatur					
KLFDBKS	V	0... FFH	0... 1.9921875	0.0078125	-
LDP_KLFDBKS_x	5	0... FFH	-48... 143.25	0.75	°C
Kennlinie Faktor für delta TKA in Abhängigkeit der Kühleraustrittstemperatur bei Start minus Umgebungstemperatur					
KLFTTANKST	V	0... FFH	0... 2.55	0.01	-
LDP_KLFTTANKST_x	6	0... FFFFH	0... 65535	1	s
Kennlinie Korrekturfaktor über Abstellzeit Initialisierung Tanktemperatur					
KLPRADBTBKS	-	0... FFH	0... 2.55	0.01	-
LDP_KLPRADBTBKS_X	8	0... FFH	0... 99.609375	0.390625	%
Temperatureintrag durch Lüfteransteuerung, Fahrzeuggeschwindigkeit, Umgebungstemp. und Kühlerjalousie					
OTMOTBKS	V	0... FFH	-48... 143.25	0.75	°C
Offset auf tmotbks wenn kein Öl- Temperatursensor verbaut ist					
TCTUMBKS	V	0... FFH	0... 25.5	0.1	s
Einschaltverzögerung von B_tumnpl					
TDSBKS	V	8000... 7FFFH	-24414.0625... 24.413317442e3	0.74505806	°C
Temperaturdifferenzschwelle für Kaltstart- erkennung					
TFSTOET	V	0... FFH	0... 255	1	I
Tankfüllstand Offset für Erkennung Tankfüllstandsveränderung					
TGRESBKS	V	0... BEH	0... 141.5610313416	0.74505806	°C
Temperaturgrenze für Resetierung des Tiefpassfilters tflvrhdp_w_LT					
TMBKSER	V	0... FFH	-48... 143.25	0.75	°C
Temperaturersatzwert für tflvrhdp_w im Fall eines Temperatursensorfehlers					
TMPIBKSER	V	0... FFH	-48... 143.25	0.75	°C
Ersatzwert MPI-Temperatur bei Sensorfehler.					
TNSEBKS	V	0... FFFFH	0... 6553.5	0.1	s
Zeit seit Startende für zttm reset in Temp. Modell BKS					
TOFSVHSK	V	0... FFH	-48... 143.25	0.75	°C
LDP_TOFSVHSK_x	5	0... FFFFH	0... 15.624761581e3	0.23841858	g/min
Temperaturoffset durch Verdich- tungsarbeit der HDP					
TTOSPGPL	V	1... FFFFH	0.1... 6553.5	0.1	s
Entprellzeit für Gültigkeitsprüfung des Ölsumpfsensor-Signals					
TUMGOBKS	V	0... FFH	-48... 143.25	0.75	°C
tumg Grenzwert für Umschaltung von tmot auf tosp					
TWATFST	V	0... FFFFH	0... 1310.7	0.02	s
Wartezeit Auswertung Tankfüllstand BKS					
ZSNMST	V	0... 2222H	0... 6.5103173256e3	0.74505806	s
Zeitschwelle nach Motorstart für zttm-Kostante					
ZTABKS	V	1... FFFFH	0.1... 6553.5	0.1	s
Filterzeitkonstante Tanktemperaturmodell					
ZTTUMGBKS	V	1... FFFFH	0.1... 6553.5	0.1	s
Zeitkonstante Tiefpass Umgebungstemperatur BKS					

Copyright ©Continental AG. Transmittal, reproduction, dissemination and/or editing of this document as well as utilisation of its contents and communication thereof to others without expressed authorisation are prohibited. Offenders will be held liable for payment of damages. All rights created by patent grant or registration of a utility model or design patent are reserved.

▶ General Information

▶ Application Conditions

Initialisation:	RST, NVMINI, NVMRES, NVMSTO, IGKON
Activation:	20MS: always 100MS: always
Deactivation:	never
Recurrence:	20MS, 100MS

▶ Function Description

▶ Signal flow diagram:

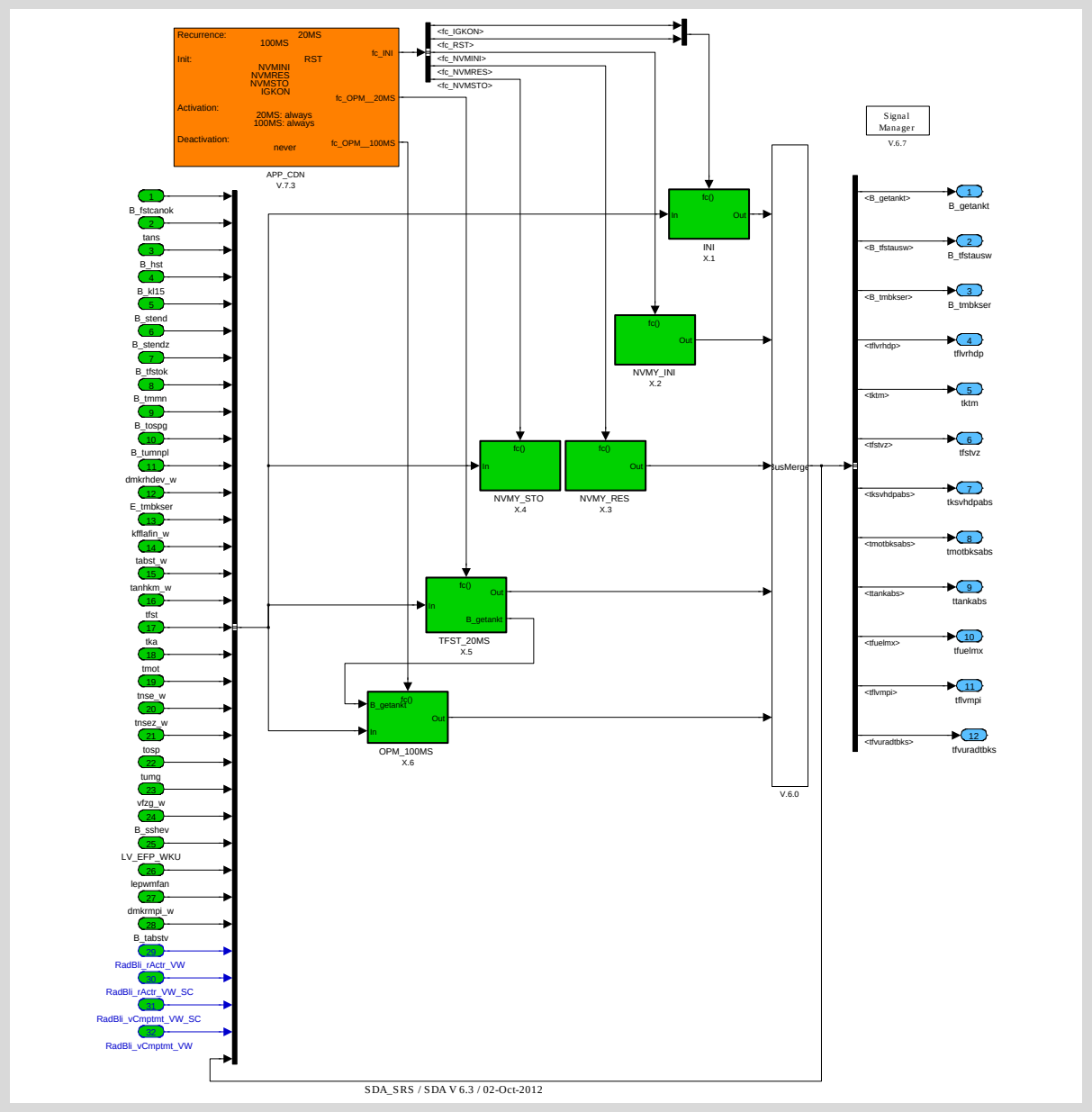

Figure 43.4.1:

Copyright ©Continental AG. Transmittal, reproduction, dissemination and/or editing of this document as well as utilisation of its contents and communication thereof to others without expressed authorisation are prohibited. Offenders will be held liable for payment of damages. All rights created by patent grant or registration of a utility model or design patent are reserved.

Path: FUSL_M408B
Initialization of BKS variables is done at RST and IGKON.

43.4.1 Initialization

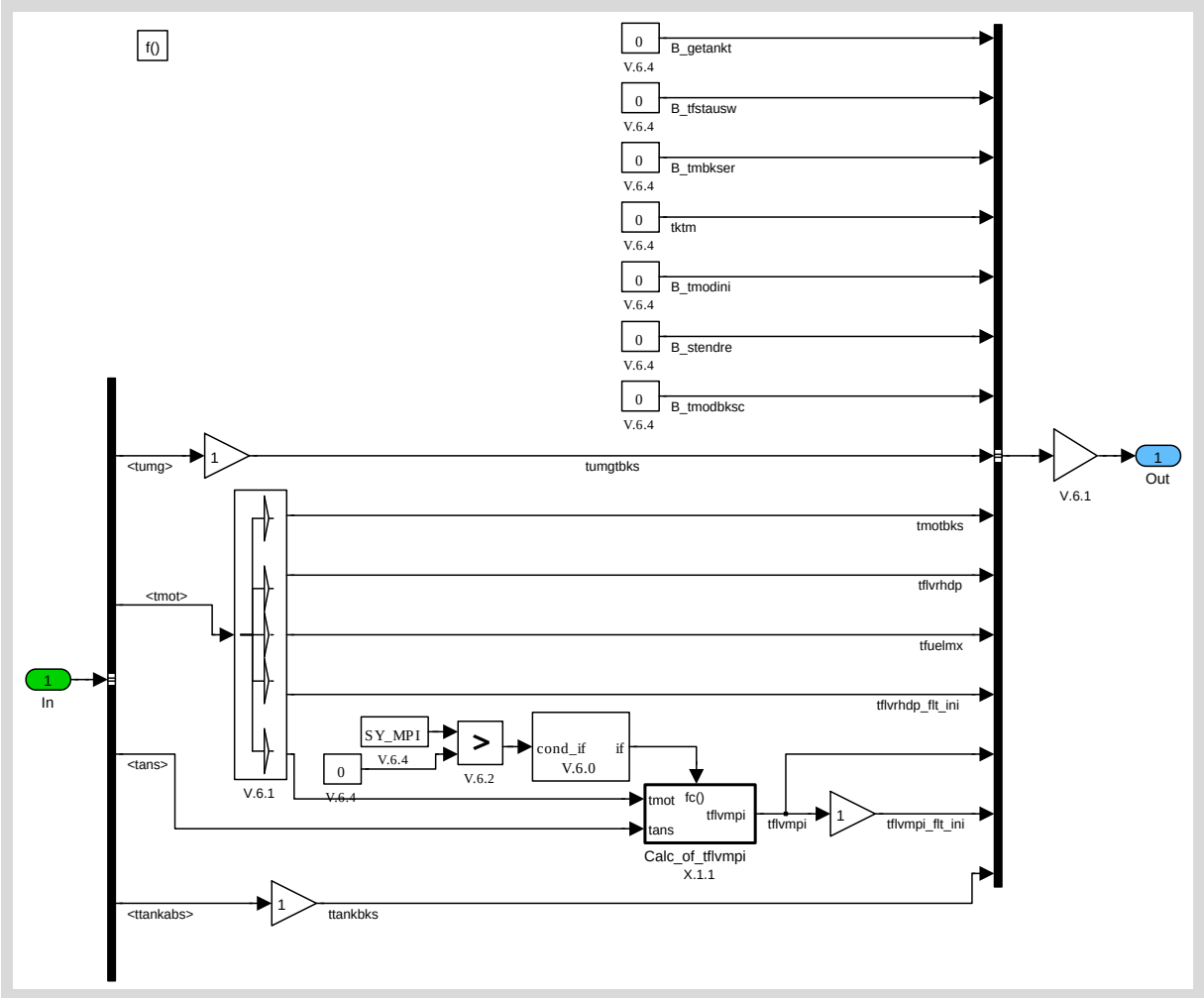

Figure 43.4.2:

Path: FUSL_M408B/INI
Internal state of the low pass filters is set to the appropriate value (e.g. tflvrhdp_flt_ini= tmot, tflvmpi_flt_ini = tflvmpi) at each IGK_ON or RST event.

Copyright ©Continental AG. Transmittal, reproduction, dissemination and/or editing of this document as well as utilisation of its contents and communication thereof to others without expressed authorisation are prohibited. Offenders will be held liable for payment of damages. All rights created by patent grant or registration of a utility model or design patent are reserved.

43.4.1.1 Calc_of_tflvmpi

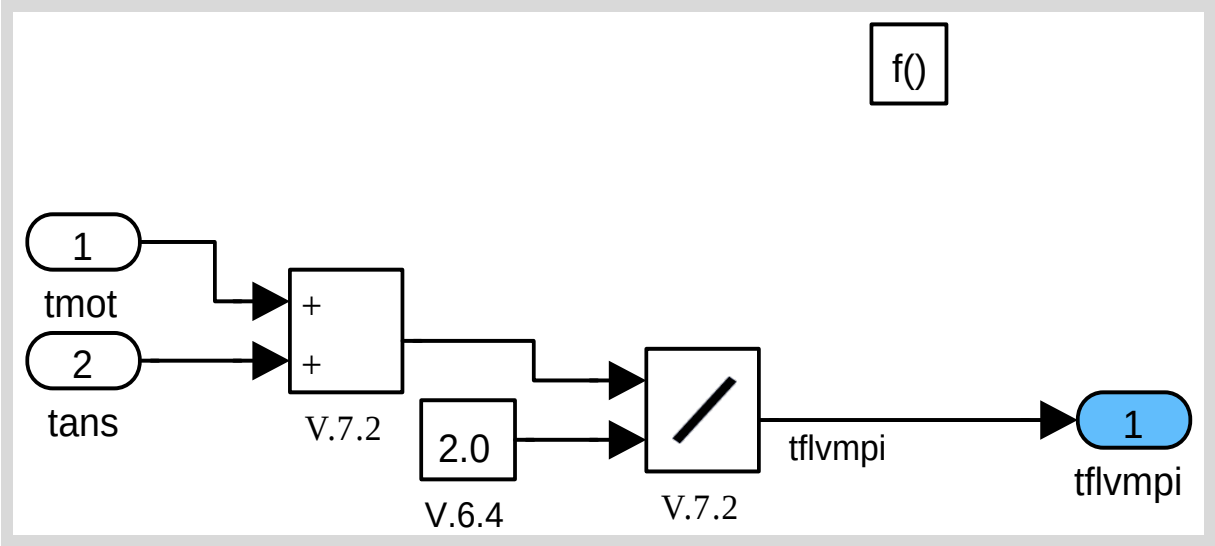

Figure 43.4.3:

Path: FUSL_M408B/INI/Subsystem

Copyright ©Continental AG. Transmittal, reproduction, dissemination and/or editing of this document as well as utilisation of its contents and communication thereof to others without expressed authorisation are prohibited. Offenders will be held liable for payment of damages. All rights created by patent grant or registration of a utility model or design patent are reserved.

43.4.2 NVMY_INI

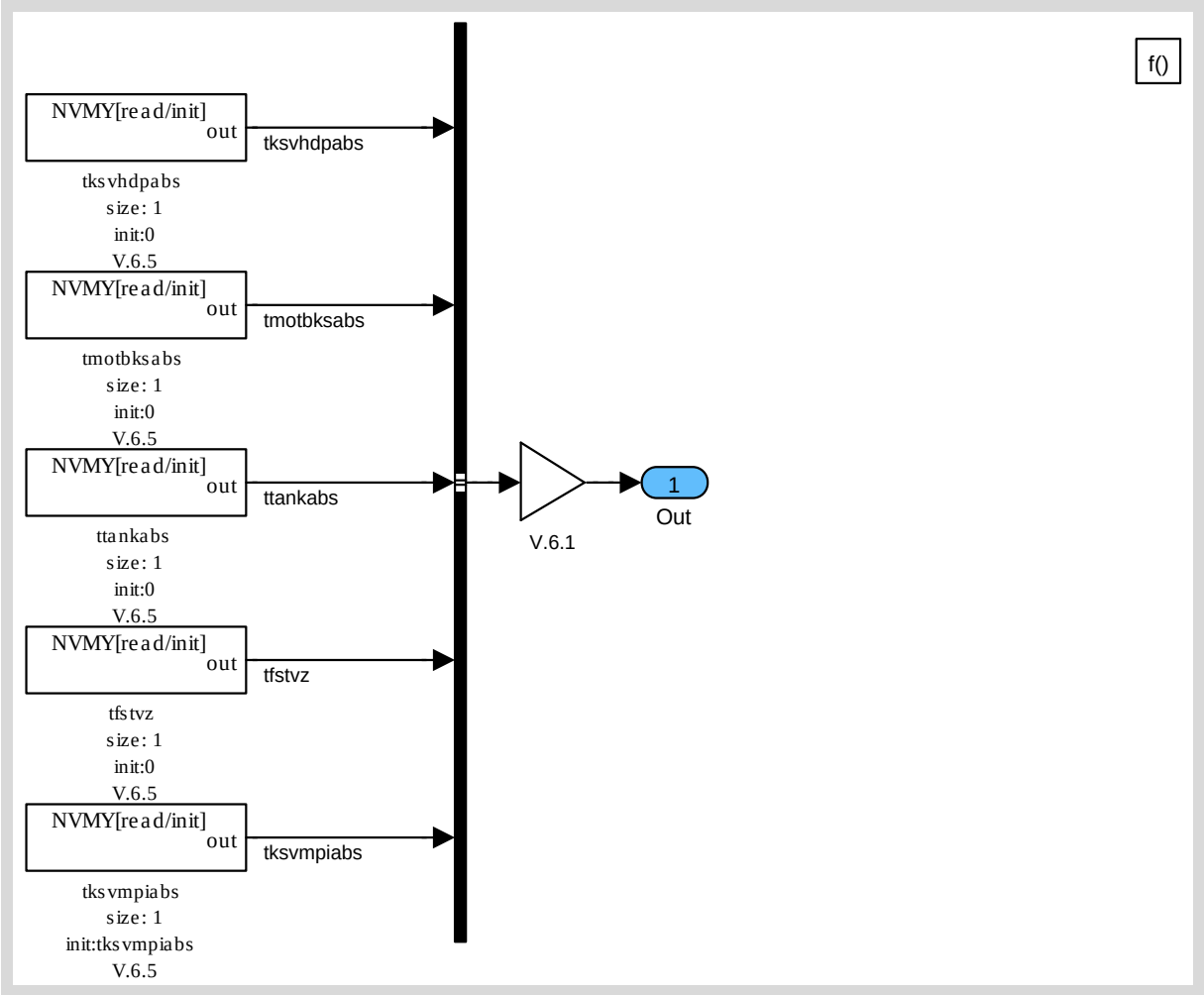

Figure 43.4.4:

Path: FUSL_M408B/NVMY_INI

Copyright ©Continental AG. Transmittal, reproduction, dissemination and/or editing of this document as well as utilisation of its contents and communication thereof to others without expressed authorisation are prohibited. Offenders will be held liable for payment of damages. All rights created by patent grant or registration of a utility model or design patent are reserved.

43.4.3 NVMY_RES

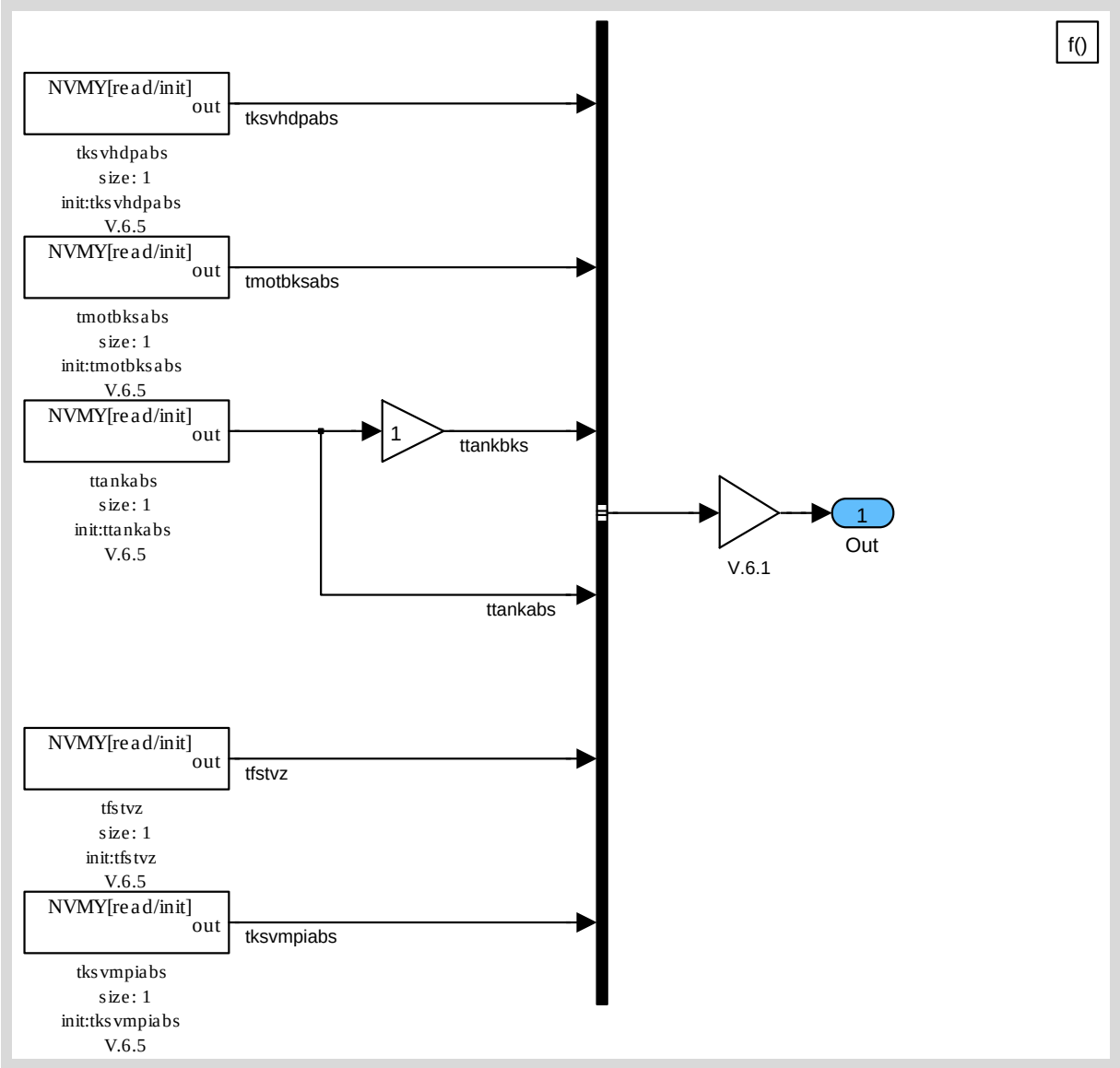

Figure 43.4.5:

Path: FUSL_M408B/NVMY_RES

Copyright ©Continental AG. Transmittal, reproduction, dissemination and/or editing of this document as well as utilisation of its contents and communication thereof to others without expressed authorisation are prohibited. Offenders will be held liable for payment of damages. All rights created by patent grant or registration of a utility model or design patent are reserved.

43.4.4 NVMY_STO

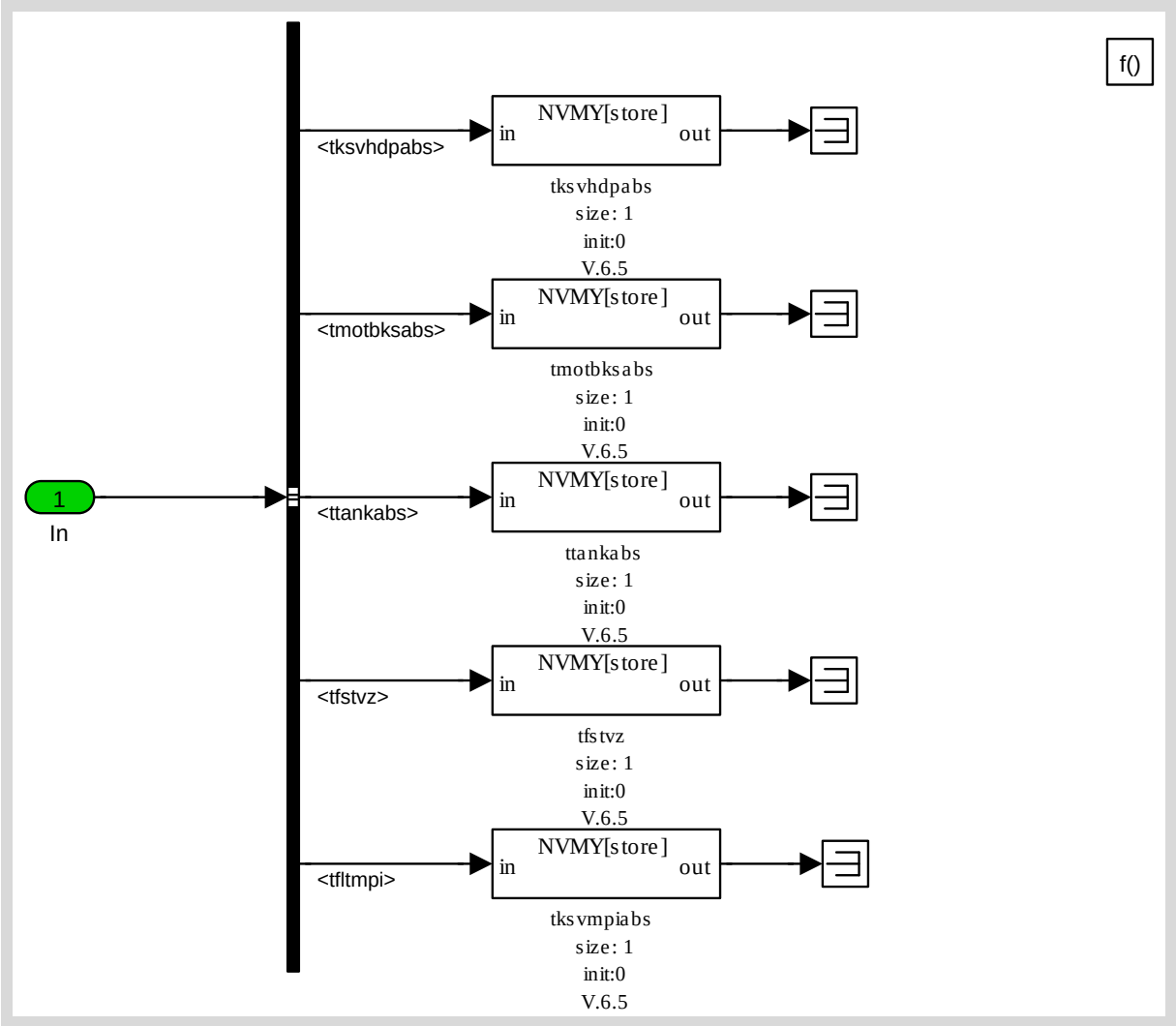

Figure 43.4.6:

Path: FUSL_M408B/NVMY_STO

Copyright ©Continental AG. Transmittal, reproduction, dissemination and/or editing of this document as well as utilisation of its contents and communication thereof to others without expressed authorisation are prohibited. Offenders will be held liable for payment of damages. All rights created by patent grant or registration of a utility model or design patent are reserved.

43.4.5 TFST_20MS

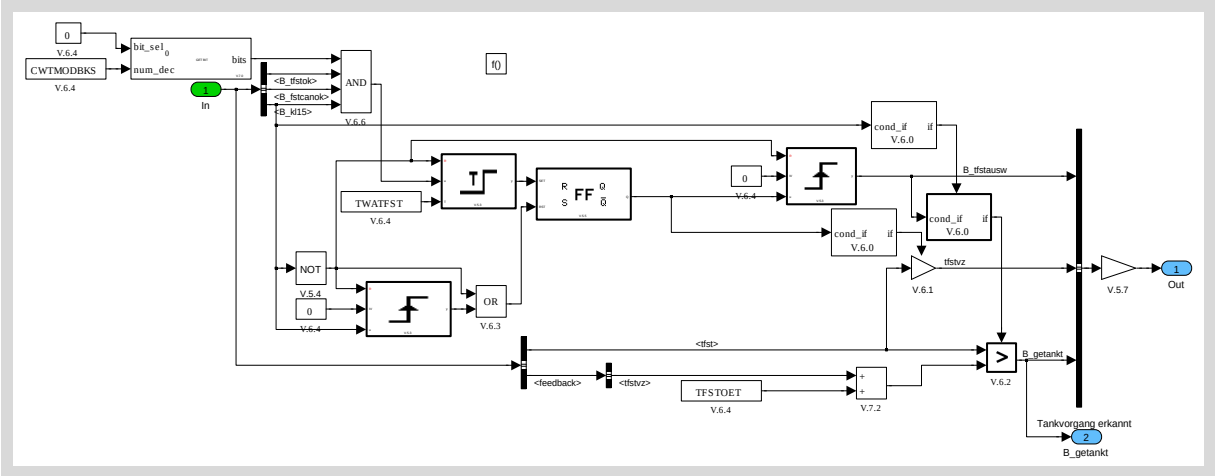

Figure 43.4.7:

Path: FUSL_M408B/TFST_20MS

Copyright ©Continental AG. Transmittal, reproduction, dissemination and/or editing of this document as well as utilisation of its contents and communication thereof to others without expressed authorisation are prohibited. Offenders will be held liable for payment of damages. All rights created by patent grant or registration of a utility model or design patent are reserved.

43.4.6 OPM_100MS

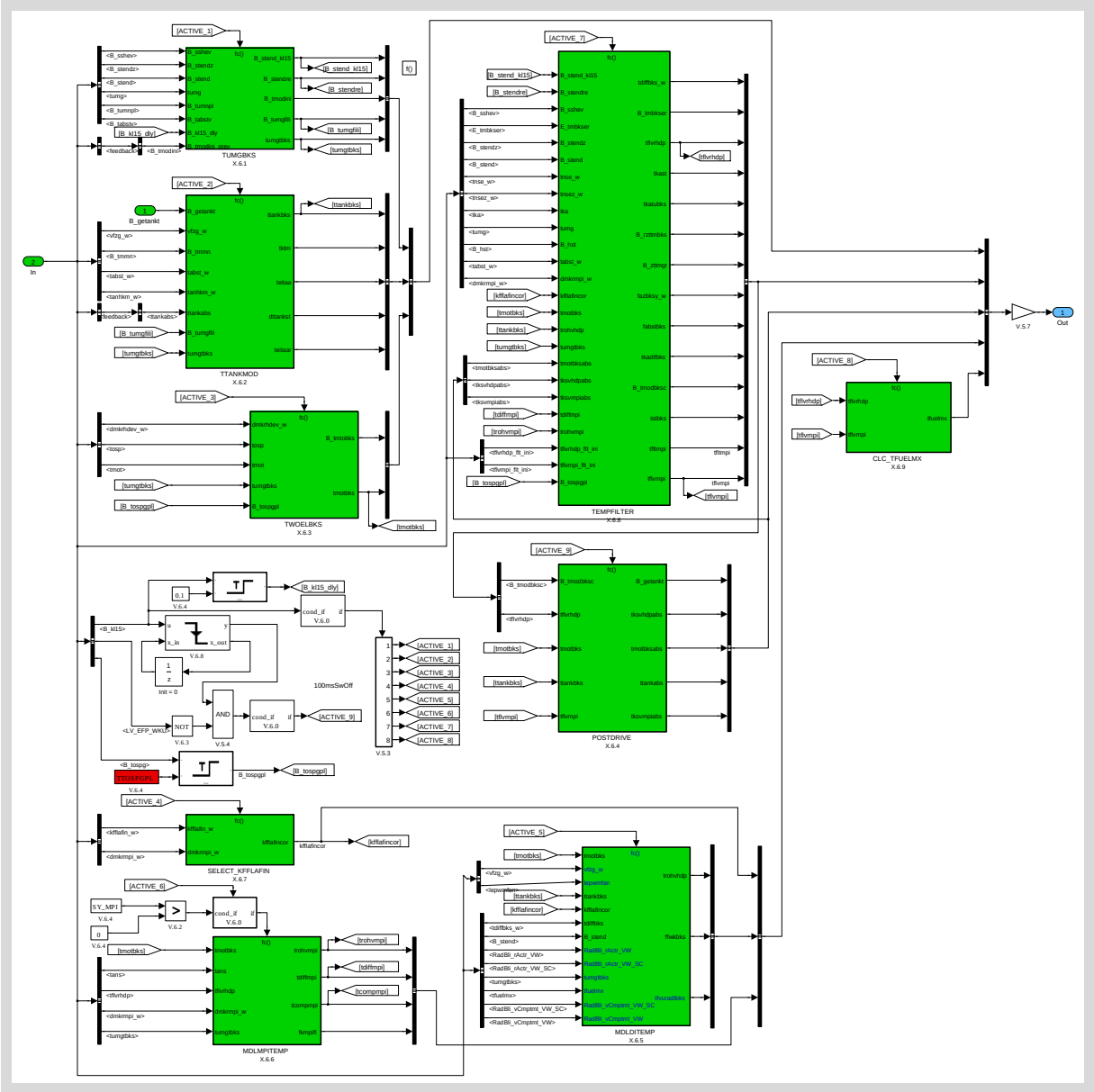

Figure 43.4.8:

Path: FUSL_M408B/OPM_100MS

Copyright ©Continental AG. Transmittal, reproduction, dissemination and/or editing of this document as well as utilisation of its contents and communication thereof to others without expressed authorisation are prohibited. Offenders will be held liable for payment of damages. All rights created by patent grant or registration of a utility model or design patent are reserved.

43.4.6.1 TUMGBKS

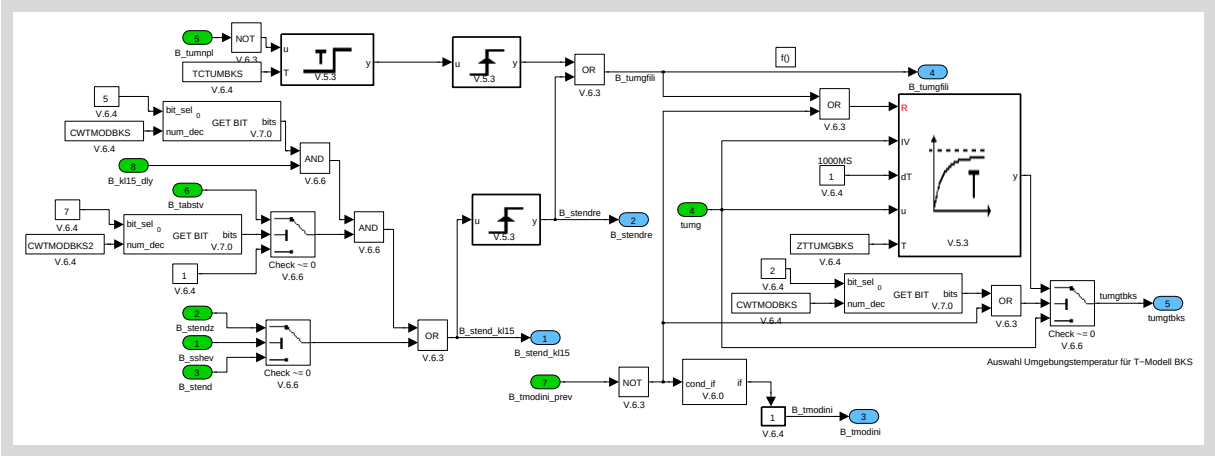

Figure 43.4.9:

Path: FUSL_M408B/OPM_100MS/TUMGBKS

43.4.6.2 TTANKMOD

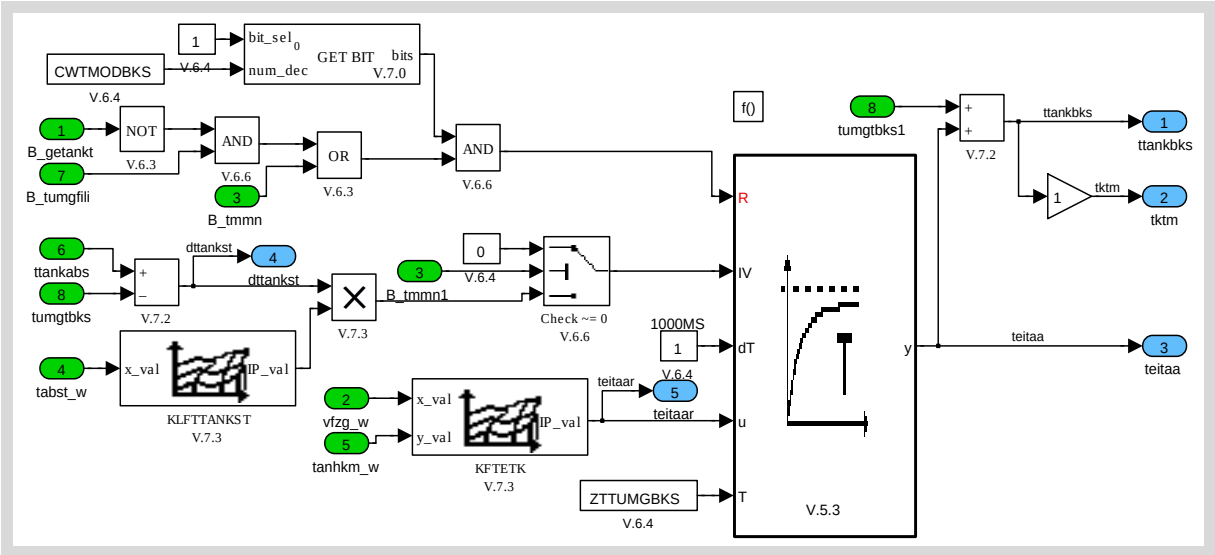

Figure 43.4.10:

Path: FUSL_M408B/OPM_100MS/TTANKMOD

Copyright ©Continental AG. Transmittal, reproduction, dissemination and/or editing of this document as well as utilisation of its contents and communication thereof to others without expressed authorisation are prohibited. Offenders will be held liable for payment of damages. All rights created by patent grant or registration of a utility model or design patent are reserved.

43.4.6.3 TWOELBKS

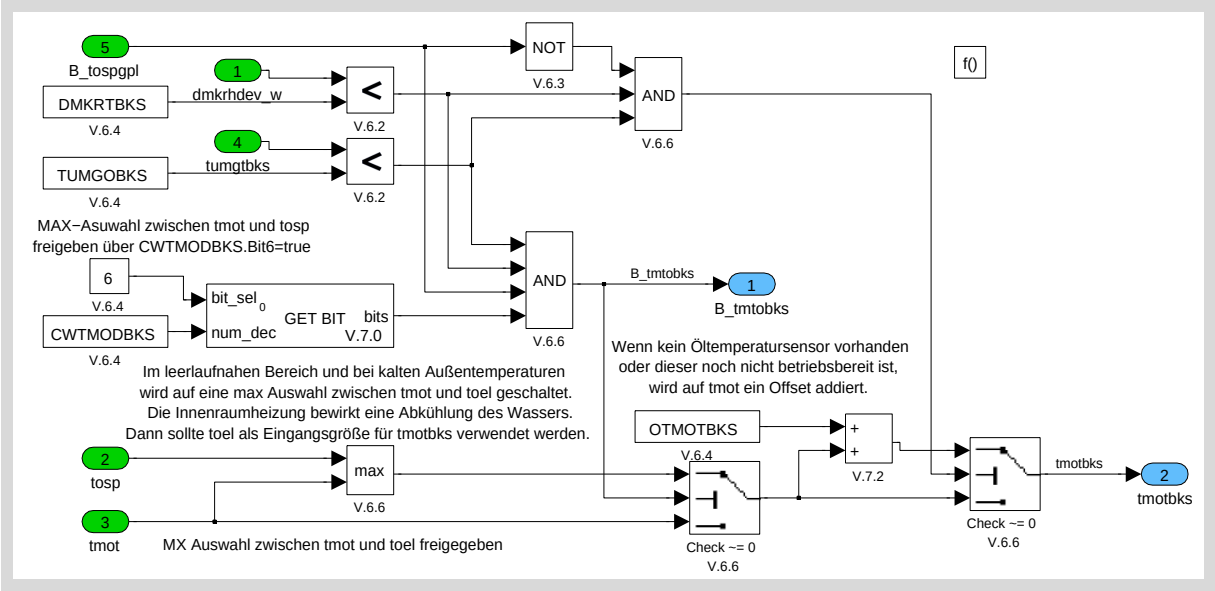

Figure 43.4.11:

Path: FUSL_M408B/OPM_100MS/TWOELBKS

43.4.6.4 SELECT_KFFLAFIN

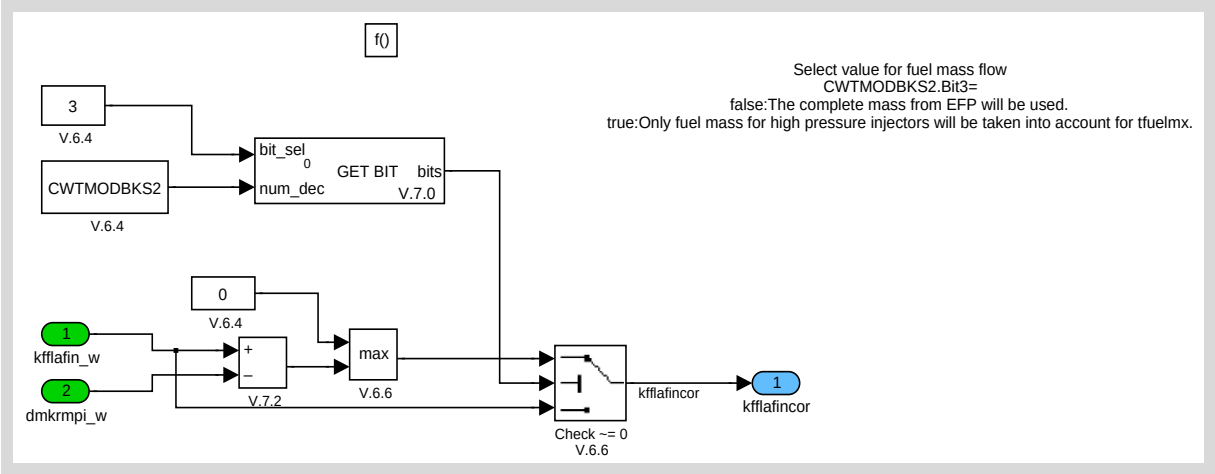

Figure 43.4.12:

Path: FUSL_M408B/OPM_100MS/SELECT_KFFLAFIN

Copyright ©Continental AG. Transmittal, reproduction, dissemination and/or editing of this document as well as utilisation of its contents and communication thereof to others without expressed authorisation are prohibited. Offenders will be held liable for payment of damages. All rights created by patent grant or registration of a utility model or design patent are reserved.

43.4.6.5 MDLDITEMP

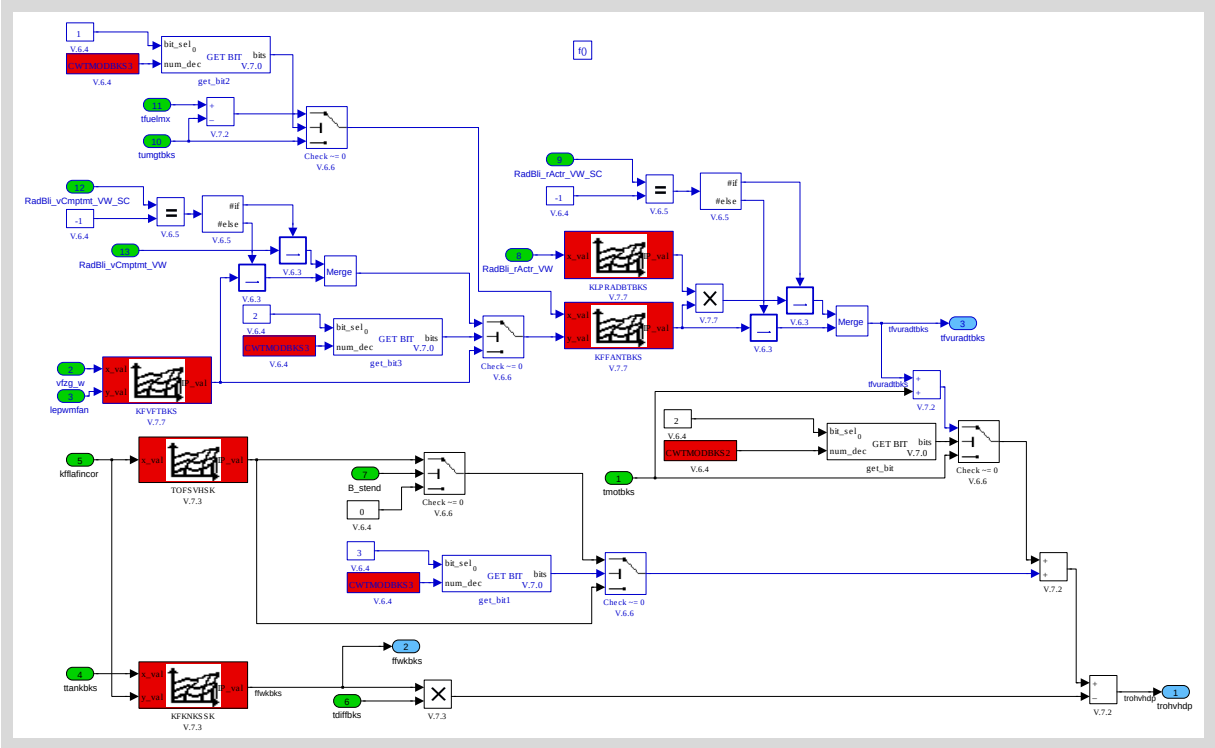

Figure 43.4.13:

Path: FUSL_M408B/OPM_100MS/ MDLDITEMP

43.4.6.6 MDLMPITEMP

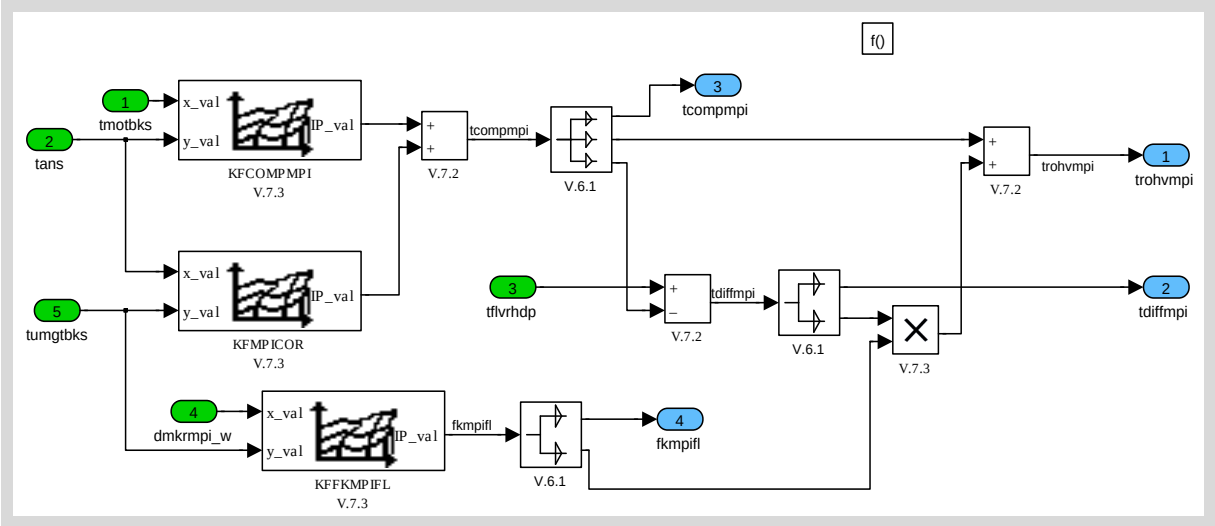

Figure 43.4.14:

Path: FUSL_M408B/OPM_100MS/MDLMPITEMP

Copyright ©Continental AG. Transmittal, reproduction, dissemination and/or editing of this document as well as utilisation of its contents and communication thereof to others without expressed authorisation are prohibited. Offenders will be held liable for payment of damages. All rights created by patent grant or registration of a utility model or design patent are reserved.

43.4.6.7 TEMPFILTER

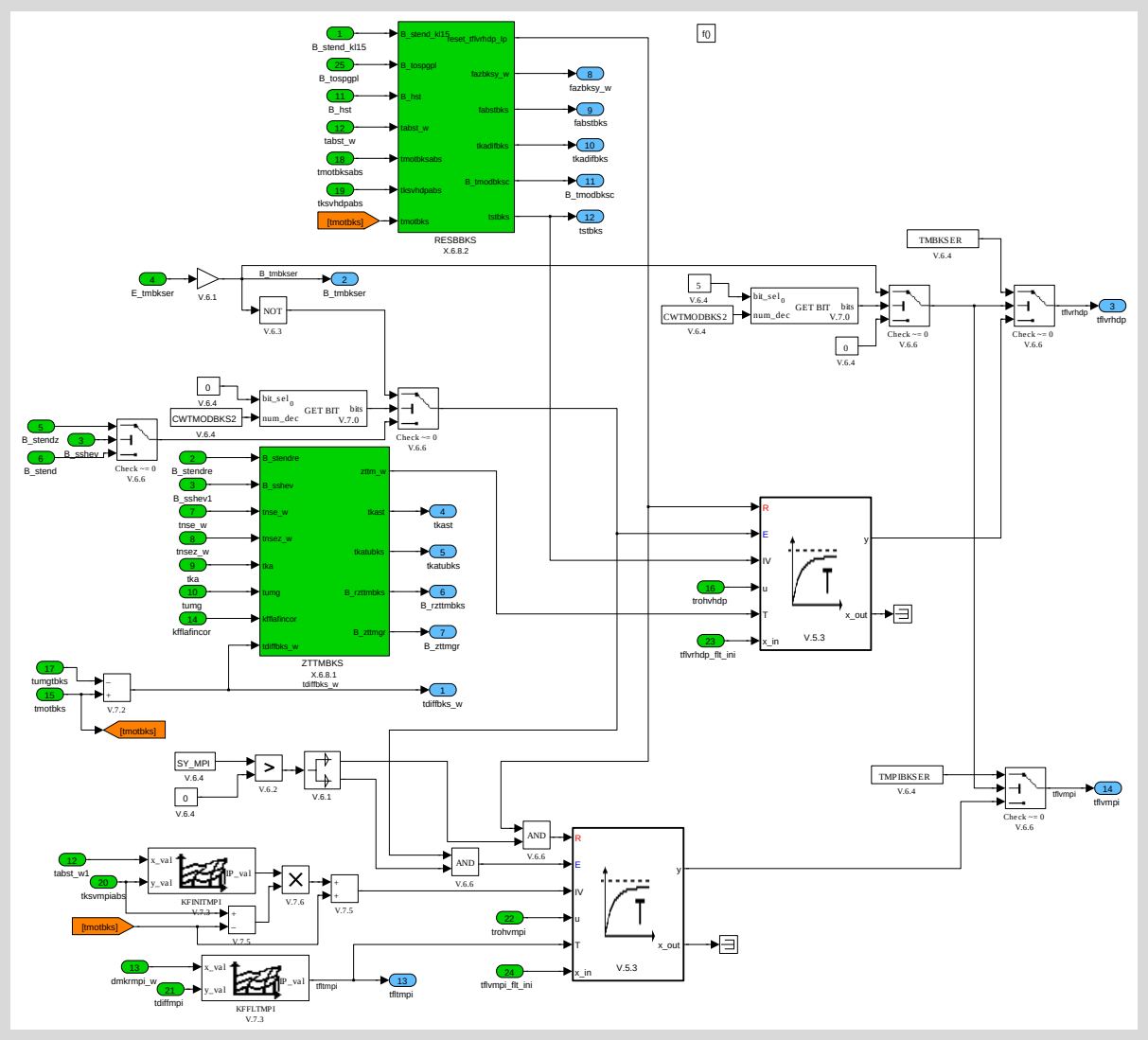

Figure 43.4.15:

Path: FUSL_M408B/OPM_100MS/TEMPFILTER

1.6.7.1 ZTTMBKS

Copyright ©Continental AG. Transmittal, reproduction, dissemination and/or editing of this document as well as utilisation of its contents and communication thereof to others without expressed authorisation are prohibited. Offenders will be held liable for payment of damages. All rights created by patent grant or registration of a utility model or design patent are reserved.

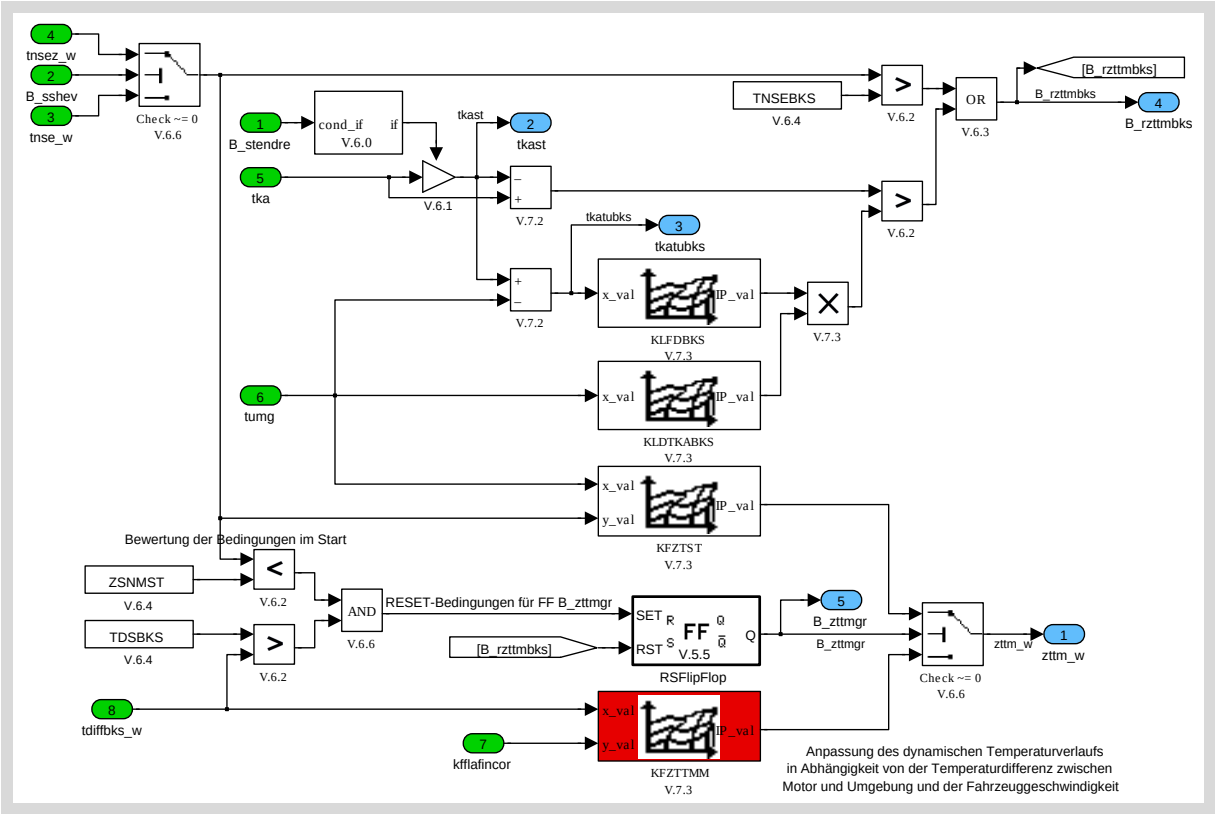

Figure 43.4.16:

Path: FUSL_M408B/OPM_100MS/TEMPFILTER/ZTTMBKS

1.6.7.2 RESBBKS

Copyright ©Continental AG. Transmittal, reproduction, dissemination and/or editing of this document as well as utilisation of its contents and communication thereof to others without expressed authorisation are prohibited. Offenders will be held liable for payment of damages. All rights created by patent grant or registration of a utility model or design patent are reserved.

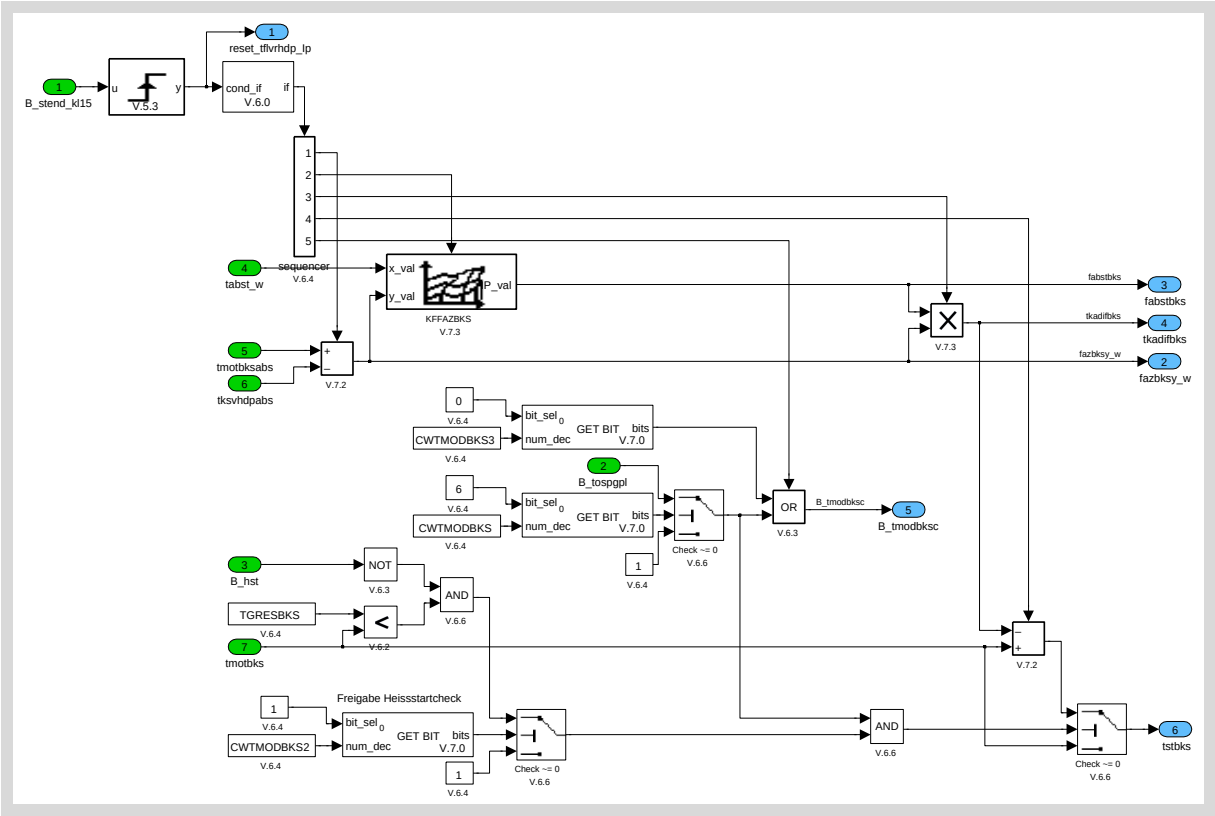

Figure 43.4.17:

Path: FUSL_M408B/OPM_100MS/TEMPFILTER/RESBBKS

Copyright ©Continental AG. Transmittal, reproduction, dissemination and/or editing of this document as well as utilisation of its contents and communication thereof to others without expressed authorisation are prohibited. Offenders will be held liable for payment of damages. All rights created by patent grant or registration of a utility model or design patent are reserved.

43.4.6.8 CLC_TFUELMX

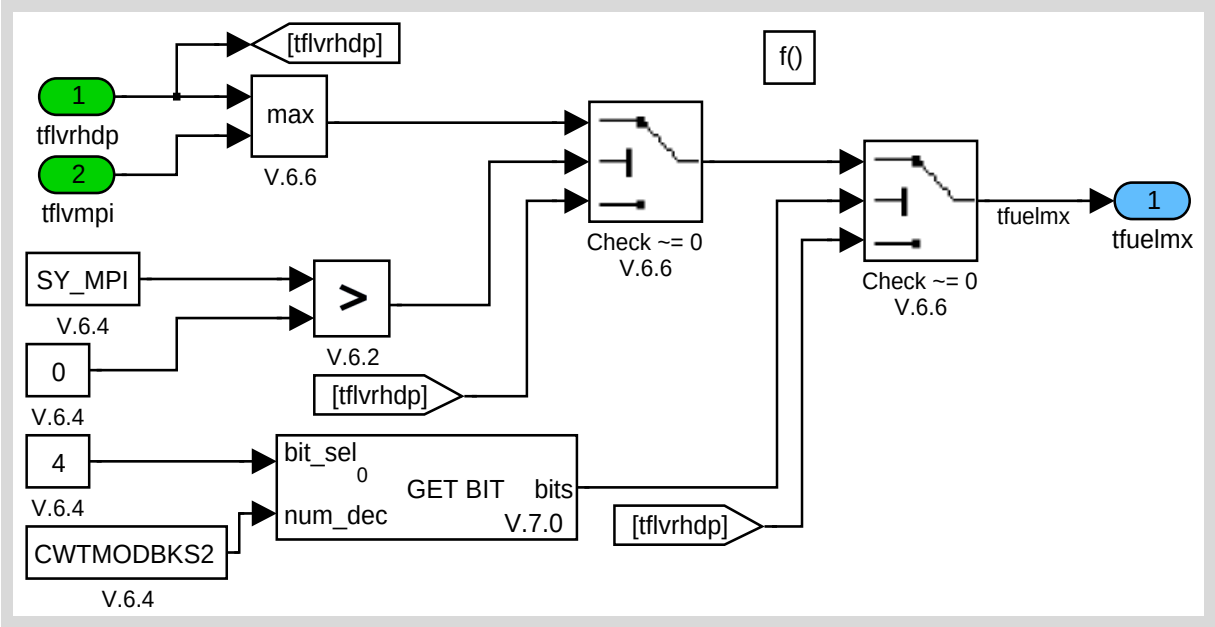

Figure 43.4.18:

Path: FUSL_M408B/OPM_100MS/CLC_TFUELMX

Copyright ©Continental AG. Transmittal, reproduction, dissemination and/or editing of this document as well as utilisation of its contents and communication thereof to others without expressed authorisation are prohibited. Offenders will be held liable for payment of damages. All rights created by patent grant or registration of a utility model or design patent are reserved.

43.4.6.9 POSTDRIVE

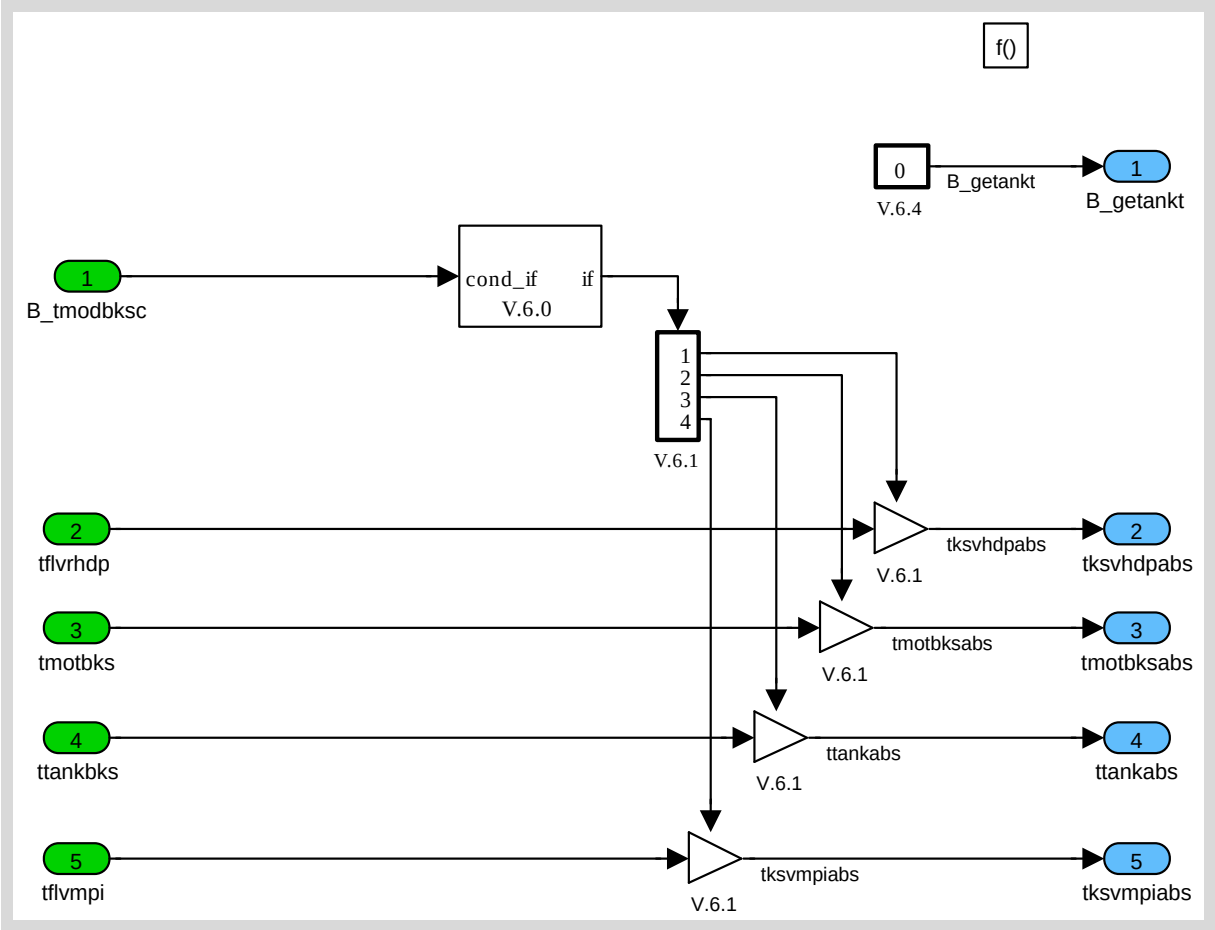

Figure 43.4.19:

Path: FUSL_M408B/OPM_100MS/POSTDRIVE

Copyright ©Continental AG. Transmittal, reproduction, dissemination and/or editing of this document as well as utilisation of its contents and communication thereof to others without expressed authorisation are prohibited. Offenders will be held liable for payment of damages. All rights created by patent grant or registration of a utility model or design patent are reserved.

43.5 Fuel temperature (Appl. Inc.)

▶ Data Definition

Name	Mode	Coded Limits	Display Limits	Resolution	Unit
B_getankt	O/V	0... 1H	0 ...1	1	-
Bedingung Tankvorgang erkannt					
B_rzttmbks	V	0... 1H	0 ...1	1	-
Bed. Reset der Filterzeitkonstanten im Temperaturmodell BKS					
B_stend_kl15	V	0... 1H	0 ...1	1	-
Bedingung (Erst)startende oder Klemme 15=ein					
B_stendre	V	0... 1H	0 ...1	1	-
Bed. Startende rising edge					
B_tfstausw	O/V	0... 1H	0 ...1	1	-
Bed. Tankfüllstand wird ausgewertet					
B_tmbkser	O/V	0... 1H	0 ...1	1	-
Bed. Fehler im Temperaturmodell BKS					
B_tmodbksc	V	0... 1H	0 ...1	1	-
Bed. Temp. Modell BKS in diesem Zyklus mindestens einmal gerechnet					
B_tmodini	V	0... 1H	0 ...1	1	-
Bedingung Nachinitialisierung unmittelbar nach Klemme15=ein abgeschlossen					
B_tmtobks	V	0... 1H	0 ...1	1	-
Bed. Umschaltung tmot oder max- Auswahl zwischen tmot und tolc					
B_tospgpl	V	0... 1H	0 ...1	1	-
Gültigkeit des Ölsumpfsensor-Signals verzögert um Entprellzeit TTOSPGPL					
B_tumgfili	V	0... 1H	0 ...1	1	-
Bed. Tiefpassfilterung von tumg in der BKS initialisieren					
B_zttmgr	V	0... 1H	0 ...1	1	-
Bedingung Zeitkonstante groß für Nachstartphase					
dttankst	V	0... FFH	0... 189.9898052216	0.74505806	°C
Deltatemperatur zwischen aktueller Tanktempratur und Tanktemperatur im Start					
fabstbks	V	8000... 7FFFH	-2... 1.999938964844	61.0352e-6	-
Wichtungsfaktor für die Abstellzeit BKS					
fazbksy_w	V	0... FE00H	-48... 142.5	0.00292969	°C
y-Eingangswert von Kennfeld KFFAZBKS					
ffwkbks	V	0... FFH	0... 3.984375	0.015625	-
Bewertungsfaktor Kühlung durch Fahrtwind					
fkmpifl	V	8000... 7FFFH	-250... 249.9923706055	0.00762939	-
Faktor MPI-Durchflussmenge nachfliessender Kraftstoff.					
kfflafincor	V	0... FFFFH	0... 15.624761581e3	0.23841858	g/min
Kraftstoffmassenstrom, schubabschalt- und MPI-Massenstrom-korrigiert.					
tcompmpi	V	0... FFH	-48... 143.25	0.75	°C
modellierte Bauraumtemperatur nahe MPI-Rail.					
tdiffbks_w	V	8000... 7FFFH	-24414.0625... 24.413317442e3	0.74505806	°C
Temperaturdifferenz Motor zu Umgebung					

Copyright ©Continental AG. Transmittal, reproduction, dissemination and/or editing of this document as well as utilisation of its contents and communication thereof to others without expressed authorisation are prohibited. Offenders will be held liable for payment of damages. All rights created by patent grant or registration of a utility model or design patent are reserved.

Name	Mode	Coded Limits	Display Limits	Resolution	Unit
tdiffmpi	V	FEF6... 10AH	-199.5 ...199.5	0.75	°C
Temperaturdifferenz MPI für nachfliessenden Kraftstoff.					
teitaa	V	0... FFH	0... 189.9898052216	0.74505806	°C
Temperatureintrag in den Tank durch Abgasanlege					
teitaar	V	0... FFH	0... 189.9898052216	0.74505806	°C
Temperatureintrag in den Tank durch Abgasanlage roh					
tfltmpi	V	1... FFFFH	0.1... 6553.5	0.1	s
Filterzeitkonstante für MPI-Temperatur-Filter.					
tflvmpi	O/V	0... FFH	-48... 143.25	0.75	°C
modellierte Kraftstofftemperatur vor MPI-Rail.					
tflvrhdp	O/V	0... FFH	-48... 143.25	0.75	°C
Temperatur Kraftstoff vor HDP					
tfstvz	O/V/S	0... FFH	0... 255	1	l
Tankfüllstand vorheriger Zyklus					
tfuelmx	O/V	0... FFH	-48... 143.25	0.75	°C
Maximale Kraftstofftemperatur im System auf ND-Seite					
tfvuradtbks	V	0... FFH	-48... 143.25	0.75	°C
Temperatureintrag durch Lüfteransteuerung, Fahrzeuggeschwindigkeit, Umgebungstemp. und Kühlerjalousie					
tkadifbks	V	0... FFH	-48... 143.25	0.75	°C
gewichtete Temperaturdifferenz zwischen tmot und tflvrhdp des letzten Zyklus					
tkast	V	0... FFH	-48... 143.25	0.75	°C
Temperatur am Kühleraustritt bei Start					
tkatubks	V	0... FFH	-48... 143.25	0.75	°C
Temperaturdifferenz Kühleraustritt bei Start und Umgebung					
tksvhdpabs	O/V/S	0... FFH	-48... 143.25	0.75	°C
Kraftstofftemperatur BKS bei Motorstop					
tksvmpiabs	O/V/S	0... FFH	-48... 143.25	0.75	°C
Abstelltemperatur für Kraftstoff vor MPI-Rail					
tktm	O/V	0... FFH	-48... 143.25	0.75	°C
Tanktemperatur modelliert					
tmotbks	V	0... FFH	-48... 143.25	0.75	°C
Motortemperatur für Tempmodell BKS					
tmotbksabs	O/V/S	0... FFH	-48... 143.25	0.75	°C
Motortemperatur BKS bei Motorstop					
trohvhdp	V	0... FFH	-48... 143.25	0.75	°C
Temperatur vor HDP ungefiltert					
trohvhdpvz	V	0... FFH	-48... 143.25	0.75	°C
Temperatur vor HDP ungefiltert vorheriger Wert					
trohvmpi	V	0... FFH	-48... 143.25	0.75	°C
Rohtemperatur Kraftstoff vor MPI-Rail.					
tstbks	V	0... FFH	-48... 143.25	0.75	°C
Temperatur desKraftstoffsystem im Start					
ttankabs	O/V/S	0... FFH	-48... 143.25	0.75	°C
Tanktemperatur aus BKS bei Abstellen					
ttankbks	V	0... FFH	-48... 143.25	0.75	°C

Copyright ©Continental AG. Transmittal, reproduction, dissemination and/or editing of this document as well as utilisation of its contents and communication thereof to others without expressed authorisation are prohibited. Offenders will be held liable for payment of damages. All rights created by patent grant or registration of a utility model or design patent are reserved.

Name	Mode	Coded Limits	Display Limits	Resolution	Unit
modellierte Tanktemperatur					
tumgtbks	V	0... FFH	-48... 143.25	0.75	°C
Umgebungstemperatur für T-Modell BKS					
zttm_w	V	1... FFFFH	0.1... 6553.5	0.1	s
Filterzeitkonstante Niederdruckerfassung					

Input Data

B_fstcanok {p. 11943}	B_hst {p. 11943}	B_kl15 {p. 11943}	B_sshev {p. 12095}
B_stend {p. 11944}	B_stendz {p. 11944}	B_tabstv {p. 11944}	B_tfstok {p. 11944}
B_tmmn {p. 11944}	B_tospg {p. 11944}	B_tumnpl {p. 11944}	dmkrhdev_w {p. 11944}
dmkrmpi_w {p. 11944}	E_tmbkser {p. 11944}	kfflafin_w {p. 12097}	lepwmfan {p. 11944}
LV_EFP_WKU {p. 12097}	RadBli_rActr_VW	RadBli_rActr_VW_SC	RadBli_vCmptmt_VW {p. 2872}
RadBli_vCmptmt_VW_SC	SY_MPI {p. 11813}	tabst_w {p. 11945}	tanhkm_w {p. 11945}
tans {p. 11945}	tfst {p. 11945}	tka {p. 11945}	tmot {p. 11945}
tnse_w {p. 11945}	tnsez_w {p. 11945}	tosp {p. 11945}	tumg {p. 11945}
vfzg_w {p. 11945}			

Calibration Data

Name	Mode	Coded Limits	Display Limits	Resolution	Unit
CWBKS3	-	0... FFH	0... 255	1	-
Codewort 3 für BKS					
CWTMODBKS	V	0... FFH	0... 255	1	-
Codewort für %TMODBKS					
CWTMODBKS2	V	0... FFH	0... 255	1	-
Codewort 2 für %TMODBKS					
CWTMODBKS3	V	0... FFH	0... 255	1	-
Codewort 3 für %TMODBKS					
DMKRTBKS	V	0... FFFFH	0... 15.624761581e3	0.23841858	g/min
Kraftstoffördermenge Grenzwert für Umschaltung von tmot auf tosp					
KFCOMPMPI	V	0... FFH	-48... 143.25	0.75	°C
LDP_KFCOMPMPI_X	5	0... FFH	-48... 143.25	0.75	°C
LDP_KFCOMPMPI_Y	5	0... FFH	-48... 143.25	0.75	°C
Kennfeld fuer Bauteiltemperatur MPI-Rail abh. von Ansaugluft- und Motortemperatur					
KFFANTBKS	V	0... FFH	-48... 143.25	0.75	°C
LDP_KFFANTBKS_x	6	0... FFH	-48... 143.25	0.75	°C
LDP_KFFANTBKS_y	6	0... FFFFH	0... 511.9921875	0.0078125	km/h

Copyright ©Continental AG. Transmittal, reproduction, dissemination and/or editing of this document as well as utilisation of its contents and communication thereof to others without expressed authorisation are prohibited. Offenders will be held liable for payment of damages. All rights created by patent grant or registration of a utility model or design patent are reserved.

Name	Mode	Coded Limits	Display Limits	Resolution	Unit
Kühlwirkung aus Durchströmungsgeschwindigkeit und Umgebungs- bzw. Kraftstoffetemp.-Umgebungstemp.					
KFFAZBKS	V	0... FFFFH	-2... 1.999938964844	61.0352e-6	-
LDP_KFFAZBKS_x	7	0... FFFFH	0... 65535	1	s
LDP_KFFAZBKS_y	5	0... FE00H	-48... 142.5	0.00292969	°C
Kennfeld Faktor Wichtung der Abstellzeit und Abstelltemperatur für Initialisierung des Kraftstofftemperaturmodell					
KFFKMPIFL	V	0... FFFFH	-250... 249.9923706055	0.00762939	-
LDP_KFFKMPIFL_X	8	0... FFFFH	0... 15.624761581e3	0.23841858	g/min
LDP_KFFKMPIFL_Y	5	0... FFH	-48... 143.25	0.75	°C
Kennfeld Wichtungsfaktor für Kühlwirkung des in die MPI-Leitung nachfliessenden Kraftstoffs					
KFFLTMPI	V	1... FFFFH	0.1... 6553.5	0.1	s
LDP_KFFLTMPI_x	8	0... FFFFH	0... 15.624761581e3	0.23841858	g/min
LDP_KFFLTMPI_y	7	FEF6... 10AH	-199.5 ...199.5	0.75	°C
Kennfeld zur Bestimmung der Filterzeitkonst. tfltmpi.					
KFINITMPI	V	0... FFFFH	-2... 1.999938964844	61.0352e-6	-
LDP_KFINITMPI_X	5	0... FFFFH	0... 65535	1	s
LDP_KFINITMPI_Y	5	0... FFH	-48... 143.25	0.75	°C
Kennfeld zur Initialisierung der Kraftstofftemperatur vor MPI-Rail					
KFKNKSSK	V	0... FFH	0... 3.984375	0.015625	-
LDP_KFKNKSSK_x	5	0... FFH	-48... 143.25	0.75	°C
LDP_KFKNKSSK_y	7	0... FFFFH	0... 15.624761581e3	0.23841858	g/min
Kennfeld Bewertungsfaktor Kühlung durch nachfließenden Kraftstoff Schubabschaltungs korrigiert					
KFMPICOR	V	0... FFH	-48... 143.25	0.75	°C
LDP_KFMPICOR_X	5	0... FFH	-48... 143.25	0.75	°C
LDP_KFMPICOR_Y	5	0... FFH	-48... 143.25	0.75	°C
Korrekturkennfeld für MPI-Rail-Temperatur in Abh. von Ansaugluft- und Umgebungstemperatur					
KFTETK	V	0... FFFFH	0... 48.827379942e3	0.74505806	°C
LDP_KFTETK_x	5	0... FFFFH	0... 511.9921875	0.0078125	km/h
LDP_KFTETK_y	5	0... FFFFH	-273.156911135 ...1.2526987121e3	0.02328306	°C
Kennfeld Temperatureintrag in den Tank					
KFVFTBKS	-	0... FFFFH	0... 511.9921875	0.0078125	km/h
LDP_KFVFTBKS_X	6	0... FFFFH	0... 511.9921875	0.0078125	km/h
LDP_KFVFTBKS_Y	6	0... FFH	0... 99.609375	0.390625	%
Durchströmungsgeschwindigkei					
KFZTST	V	1... FFFFH	0.1... 6553.5	0.1	s
LDP_KFZTST_x	5	0... FFH	-48... 143.25	0.75	°C
LDP_KFZTST_y	5	0... FFFFH	0... 6553.5	0.1	s
Kennfeld für Filterzeitkonstante in der (Nach)startphase					
KFZTTMM	V	1... FFFFH	0.1... 6553.5	0.1	s
LDP_KFZTTMM_x	7	8000... 7FFFH	-24414.0625... 24.413317442e3	0.74505806	°C
LDP_KFZTTMM_y	9	0... FFFFH	0... 15.624761581e3	0.23841858	g/min
Kennfeld Zeitkonstante für Tiefpassfilter tflvrhdp_LT					

Copyright ©Continental AG. Transmittal, reproduction, dissemination and/or editing of this document as well as utilisation of its contents and communication thereof to others without expressed authorisation are prohibited. Offenders will be held liable for payment of damages. All rights created by patent grant or registration of a utility model or design patent are reserved.

Name	Mode	Coded Limits	Display Limits	Resolution	Unit
KLDTKABKS	V	0... FFH	-48... 143.25	0.75	°C
LDP_KLDTKABKS_x	8	0... FFH	-48... 143.25	0.75	°C
Kennlinie delta tka in Abhängigkeit der Umgebungstemperatur					
KLFDBKS	V	0... FFH	0... 1.9921875	0.0078125	-
LDP_KLFDBKS_x	5	0... FFH	-48... 143.25	0.75	°C
Kennlinie Faktor für delta TKA in Abhängigkeit der Kühleraustrittstemperatur bei Start minus Umgebungstemperatur					
KLFTTANKST	V	0... FFH	0... 2.55	0.01	-
LDP_KLFTTANKST_x	6	0... FFFFH	0... 65535	1	s
Kennlinie Korrekturfaktor über Abstellzeit Initialisierung Tanktemperatur					
KLPRADBTBKS	-	0... FFH	0... 2.55	0.01	-
LDP_KLPRADBTBKS_X	8	0... FFH	0... 99.609375	0.390625	%
Temperatureintrag durch Lüfteransteuerung, Fahrzeuggeschwindigkeit, Umgebungstemp. und Kühlerjalousie					
OTMOTBKS	V	0... FFH	-48... 143.25	0.75	°C
Offset auf tmotbks wenn kein Öl- Temperatursensor verbaut ist					
TCTUMBKS	V	0... FFH	0... 25.5	0.1	s
Einschaltverzögerung von B_tumnpl					
TDSBKS	V	8000... 7FFFH	-24414.0625... 24.413317442e3	0.74505806	°C
Temperaturdifferenzschwelle für Kaltstart- erkennung					
TFSTOET	V	0... FFH	0... 255	1	I
Tankfüllstand Offset für Erkennung Tankfüllstandsveränderung					
TGRESBKS	V	0... BEH	0... 141.5610313416	0.74505806	°C
Temperaturgrenze für Resetierung des Tiefpassfilters tflvrhdp_w_LT					
TMBKSER	V	0... FFH	-48... 143.25	0.75	°C
Temperaturersatzwert für tflvrhdp_w im Fall eines Temperatursensorfehlers					
TMPIBKSER	V	0... FFH	-48... 143.25	0.75	°C
Ersatzwert MPI-Temperatur bei Sensorfehler.					
TNSEBKS	V	0... FFFFH	0... 6553.5	0.1	s
Zeit seit Startende für zttm reset in Temp. Modell BKS					
TOFSVHSK	V	0... FFH	-48... 143.25	0.75	°C
LDP_TOFSVHSK_x	5	0... FFFFH	0... 15.624761581e3	0.23841858	g/min
Temperaturoffset durch Verdich- tungsarbeit der HDP					
TTOSPGPL	V	1... FFFFH	0.1... 6553.5	0.1	s
Entprellzeit für Gültigkeitsprüfung des Ölsumpfsensor-Signals					
TUMGOBKS	V	0... FFH	-48... 143.25	0.75	°C
tumg Grenzwert für Umschaltung von tmot auf tosp					
TWATFST	V	0... FFFFH	0... 1310.7	0.02	s
Wartezeit Auswertung Tankfüllstand BKS					
ZSNMST	V	0... 2222H	0... 6.5103173256e3	0.74505806	s
Zeitschwelle nach Motorstart für zttm-Kostante					
ZTABKS	V	1... FFFFH	0.1... 6553.5	0.1	s
Filterzeitkonstante Tanktemperaturmodell					
ZTTUMGBKS	V	1... FFFFH	0.1... 6553.5	0.1	s
Zeitkonstante Tiefpass Umgebungstemperatur BKS					

Copyright ©Continental AG. Transmittal, reproduction, dissemination and/or editing of this document as well as utilisation of its contents and communication thereof to others without expressed authorisation are prohibited. Offenders will be held liable for payment of damages. All rights created by patent grant or registration of a utility model or design patent are reserved.

▶ General Information

▶ Application Conditions

Initialisation:	RST, NVMINI, NVMRES, NVMSTO, IGKON
Activation:	20MS: always 100MS: always
Deactivation:	never
Recurrence:	20MS, 100MS

▶ Function Description

▶ Signal flow diagram:

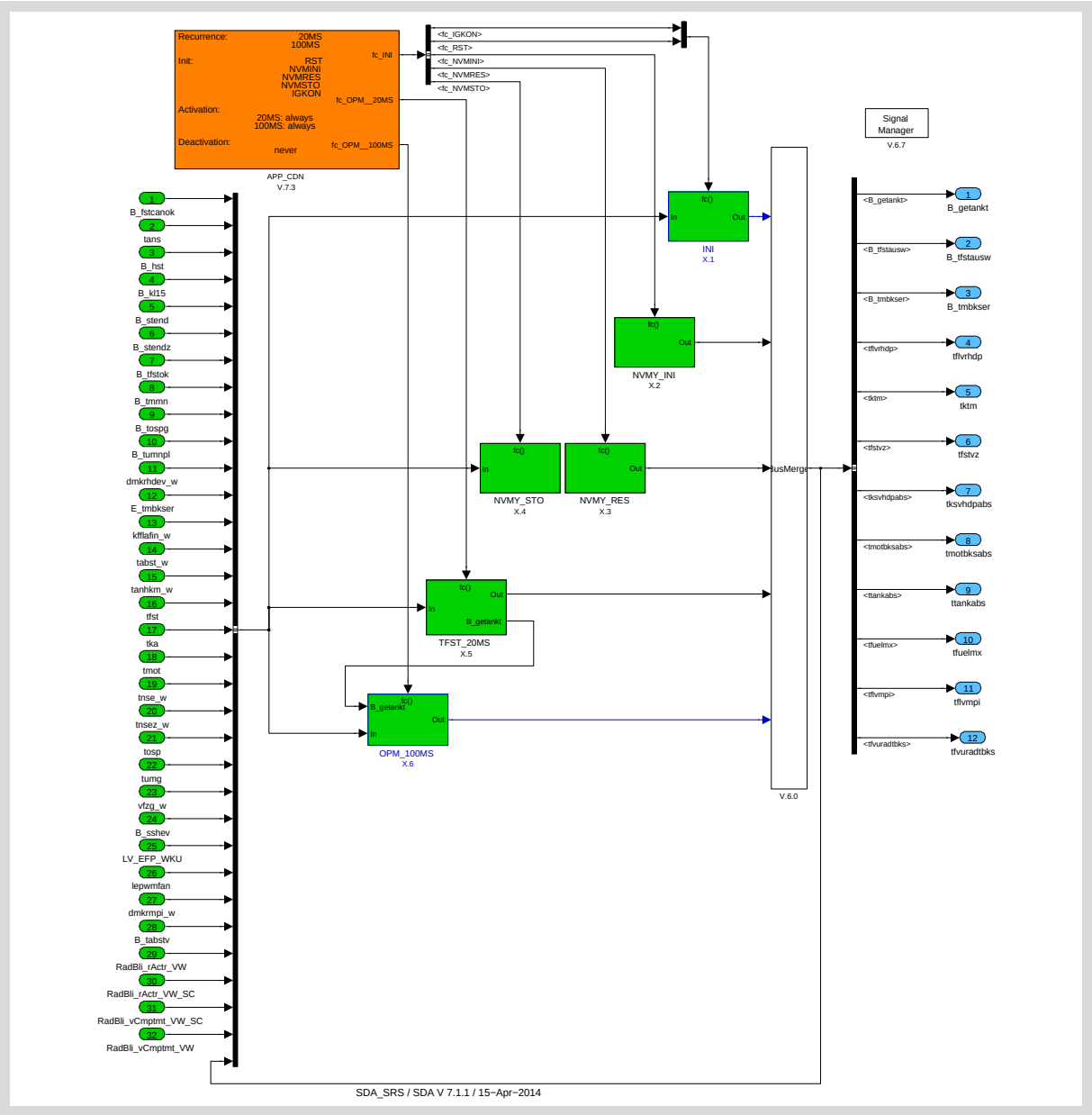

Figure 43.5.1:

Copyright ©Continental AG. Transmittal, reproduction, dissemination and/or editing of this document as well as utilisation of its contents and communication thereof to others without expressed authorisation are prohibited. Offenders will be held liable for payment of damages. All rights created by patent grant or registration of a utility model or design patent are reserved.

Path: FUSL_M408B

Initialization of BKS variables is done at RST and IGKON.

43.5.1 Initialization

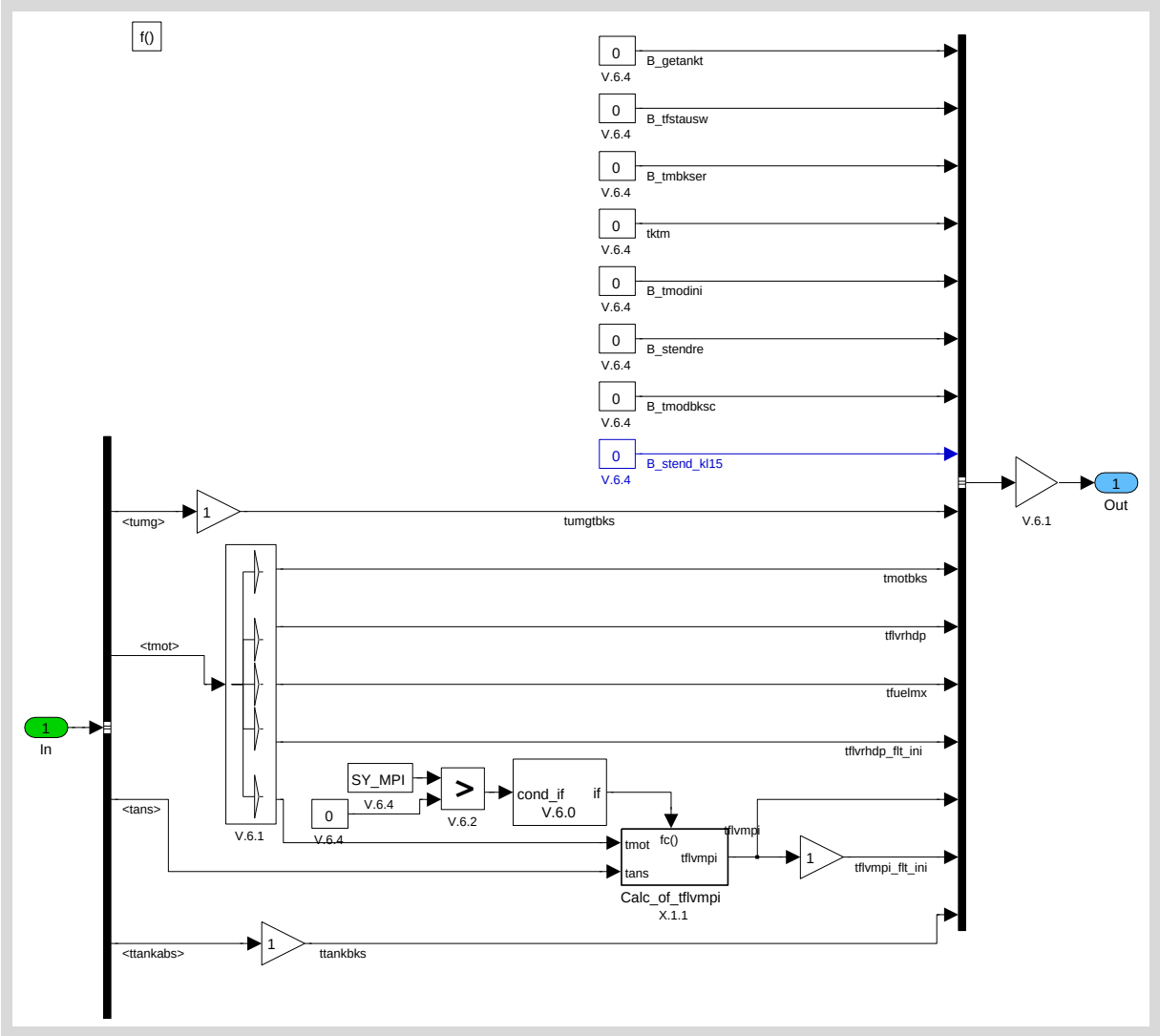

Figure 43.5.2:

Path: FUSL_M408B/INI

Internal state of the low pass filters is set to the appropriate value (e.g. tflvrhdp_flt_ini= tmot, tflvmpi_flt_ini = tflvmpi) at each IGK_ON or RST event.

Copyright ©Continental AG. Transmittal, reproduction, dissemination and/or editing of this document as well as utilisation of its contents and communication thereof to others without expressed authorisation are prohibited. Offenders will be held liable for payment of damages. All rights created by patent grant or registration of a utility model or design patent are reserved.

43.5.1.1 Calc_of_tflvmpi

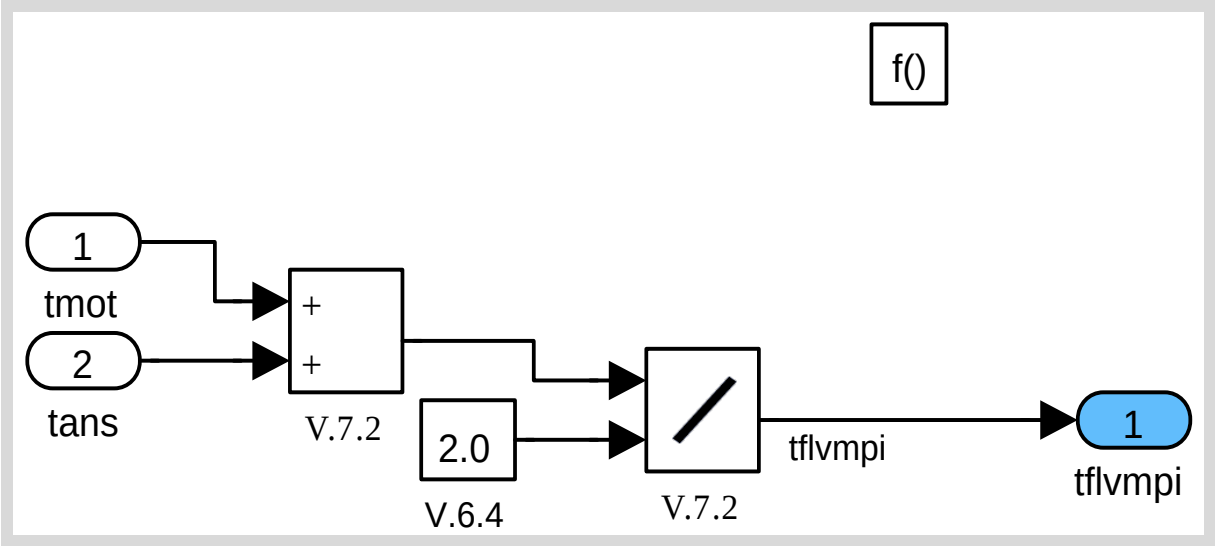

Figure 43.5.3:

Path: FUSL_M408B/INI/Subsystem

Copyright ©Continental AG. Transmittal, reproduction, dissemination and/or editing of this document as well as utilisation of its contents and communication thereof to others without expressed authorisation are prohibited. Offenders will be held liable for payment of damages. All rights created by patent grant or registration of a utility model or design patent are reserved.

43.5.2 NVMY_INI

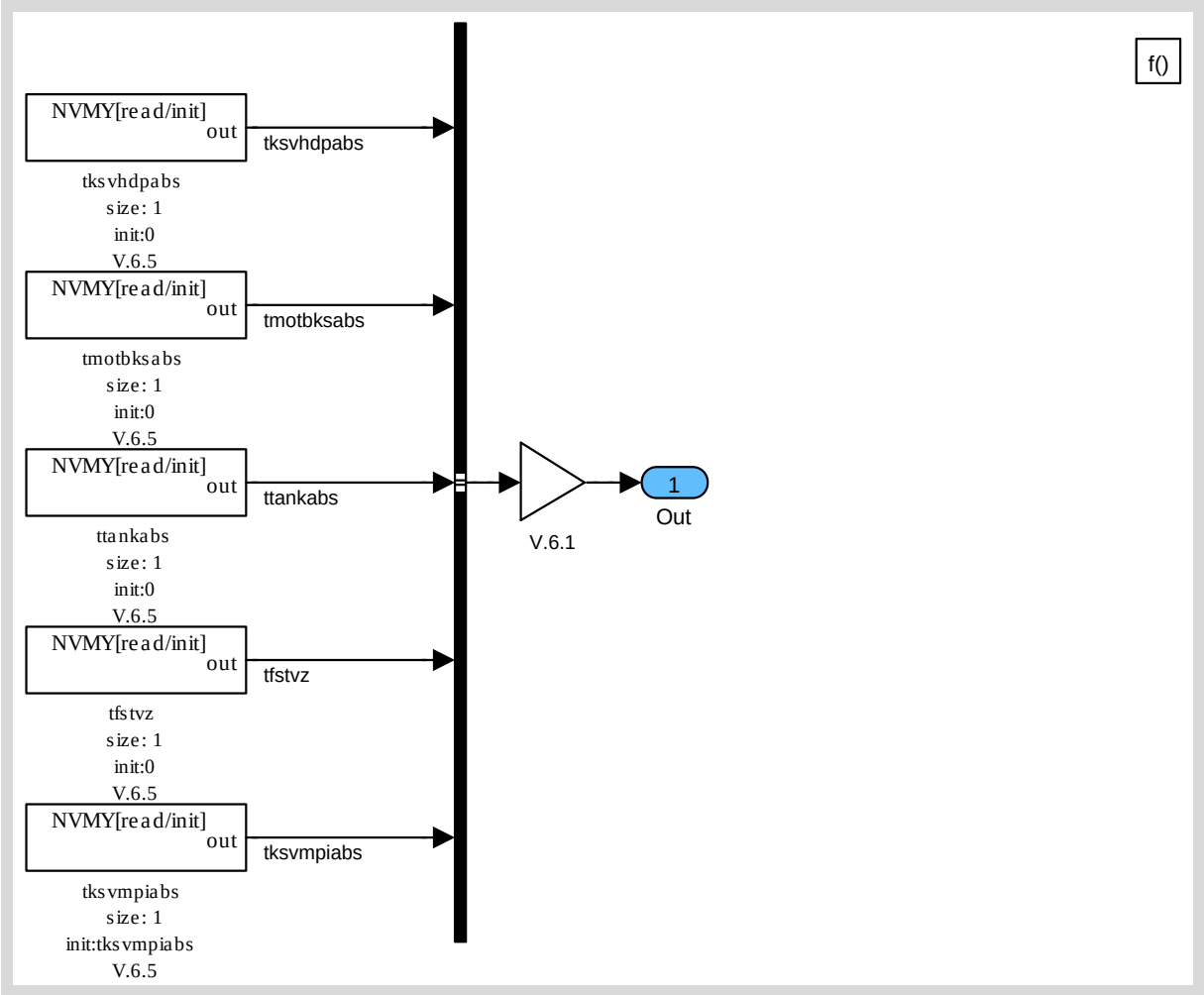

Figure 43.5.4:

Path: FUSL_M408B/NVMY_INI

Copyright ©Continental AG. Transmittal, reproduction, dissemination and/or editing of this document as well as utilisation of its contents and communication thereof to others without expressed authorisation are prohibited. Offenders will be held liable for payment of damages. All rights created by patent grant or registration of a utility model or design patent are reserved.

43.5.3 NVMY_RES

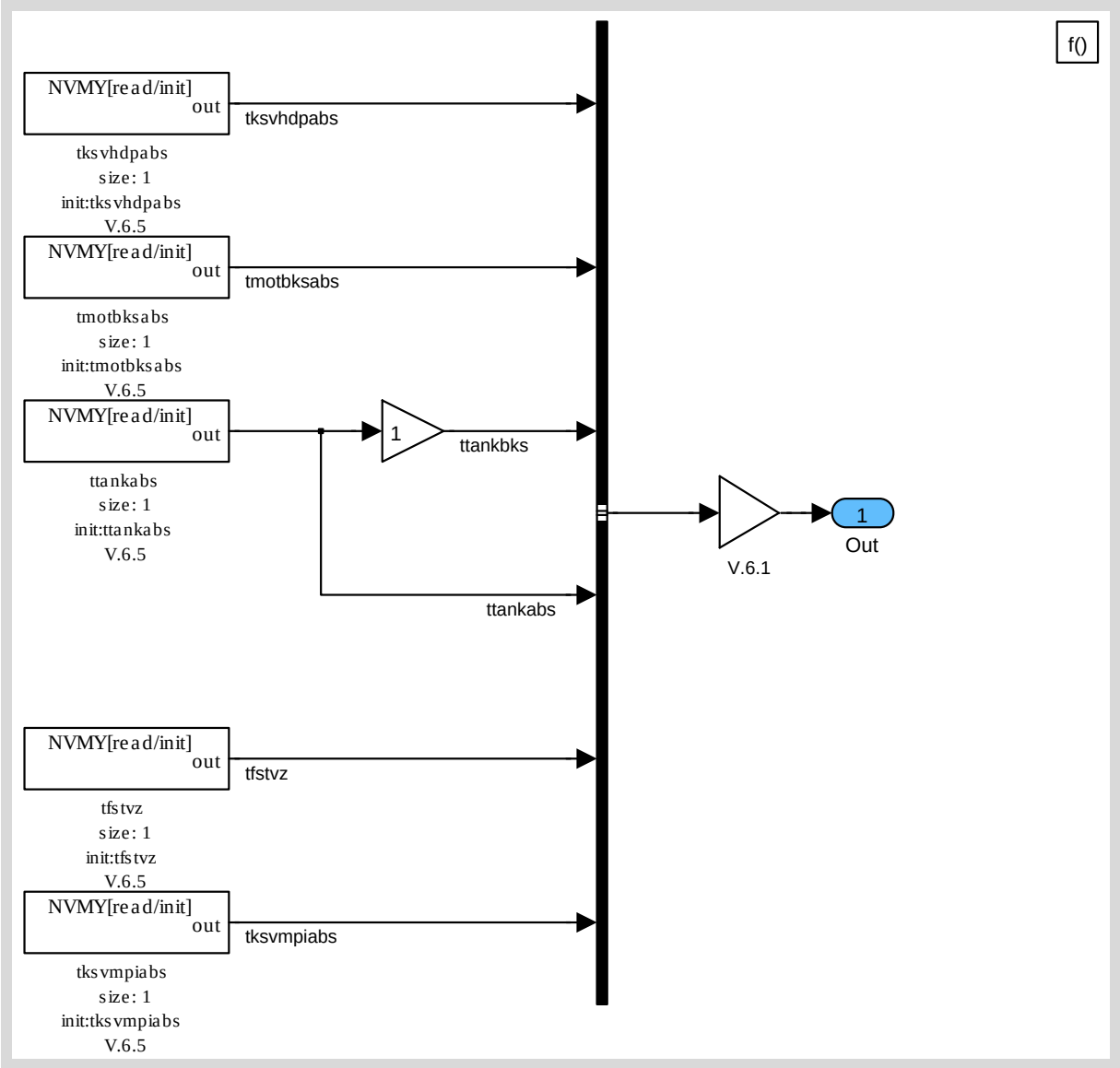

Figure 43.5.5:

Path: FUSL_M408B/NVMY_RES

Copyright ©Continental AG. Transmittal, reproduction, dissemination and/or editing of this document as well as utilisation of its contents and communication thereof to others without expressed authorisation are prohibited. Offenders will be held liable for payment of damages. All rights created by patent grant or registration of a utility model or design patent are reserved.

43.5.4 NVMY_STO

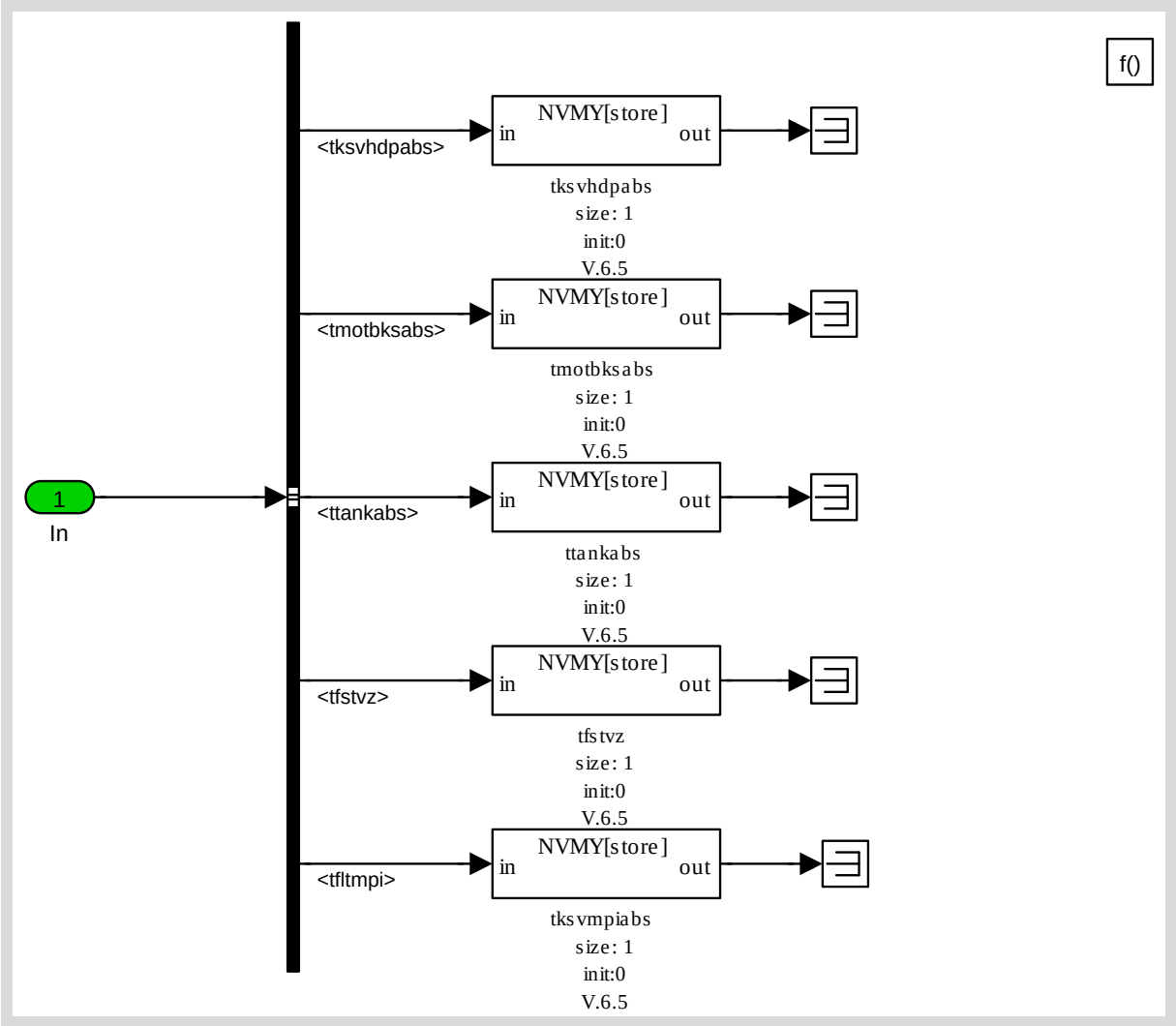

Figure 43.5.6:

Path: FUSL_M408B/NVMY_STO

Copyright ©Continental AG. Transmittal, reproduction, dissemination and/or editing of this document as well as utilisation of its contents and communication thereof to others without expressed authorisation are prohibited. Offenders will be held liable for payment of damages. All rights created by patent grant or registration of a utility model or design patent are reserved.

43.5.5 TFST_20MS

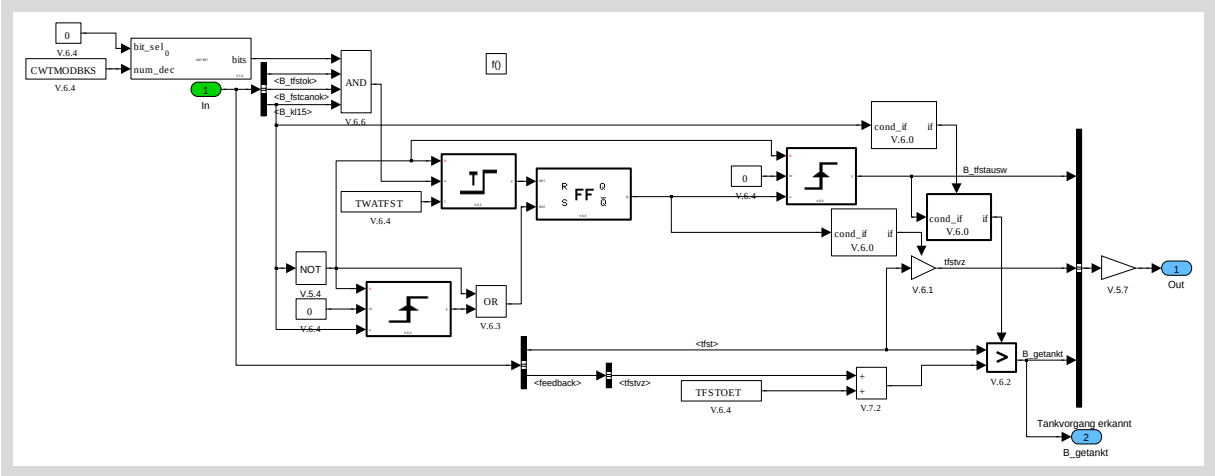

Figure 43.5.7:

Path: FUSL_M408B/TFST_20MS

Copyright ©Continental AG. Transmittal, reproduction, dissemination and/or editing of this document as well as utilisation of its contents and communication thereof to others without expressed authorisation are prohibited. Offenders will be held liable for payment of damages. All rights created by patent grant or registration of a utility model or design patent are reserved.

43.5.6 OPM_100MS

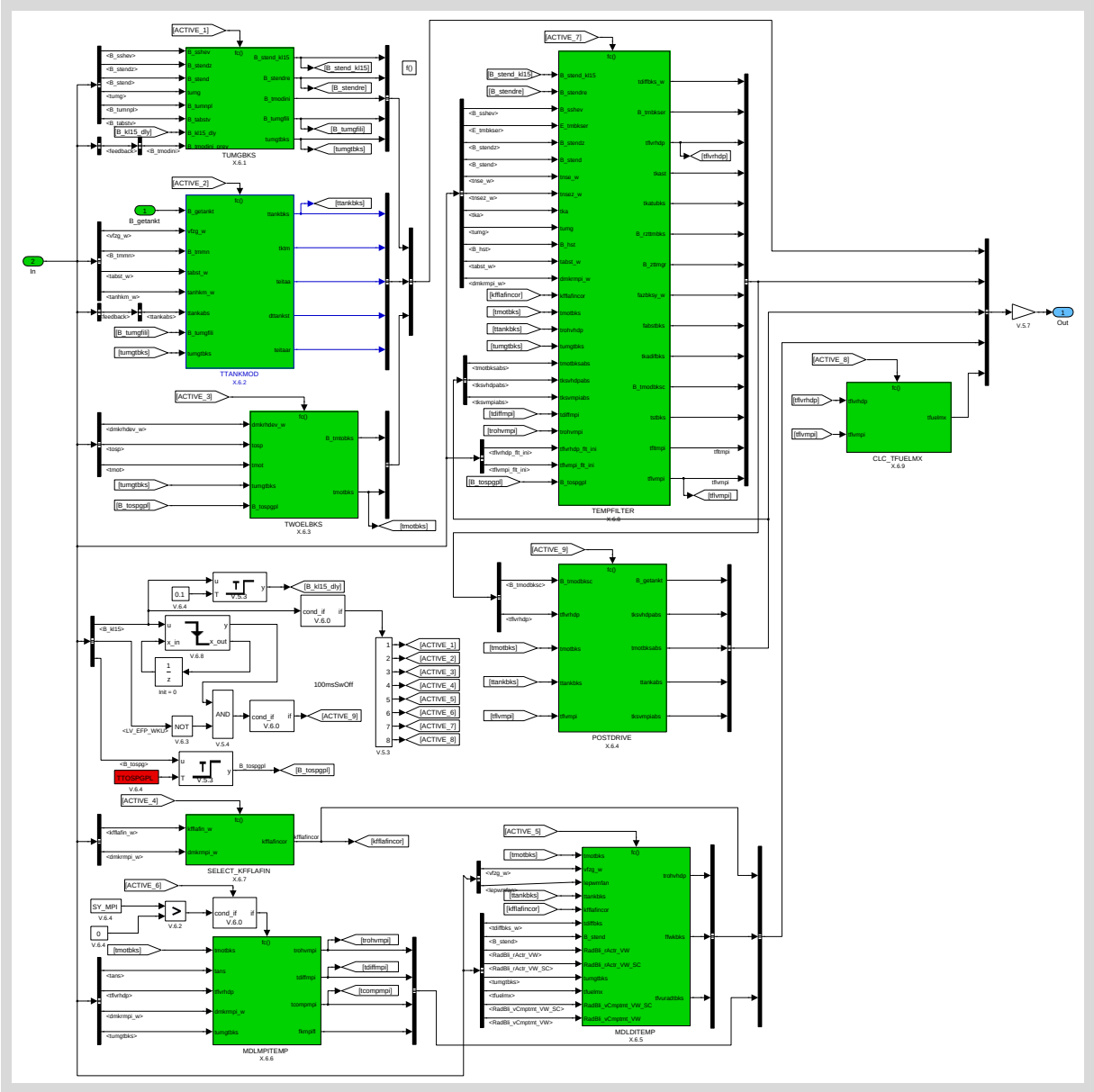

Figure 43.5.8:

Path: FUSL_M408B/OPM_100MS

Copyright©Continental AG. Transmittal, reproduction, dissemination and/or editing of this document as well as utilisation of its contents and communication thereof to others without expressed authorisation are prohibited. Offenders will be held liable for payment of damages. All rights created by patent grant or registration of a utility model or design patent are reserved.

43.5.6.1 TUMGBKS

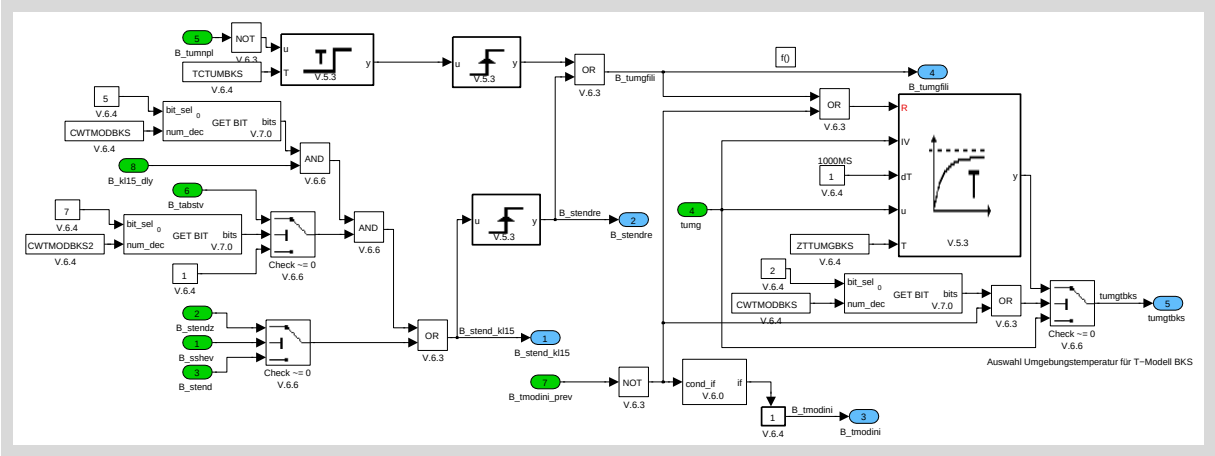

Figure 43.5.9:

Path: FUSL_M408B/OPM_100MS/TUMGBKS

43.5.6.2 TTANKMOD

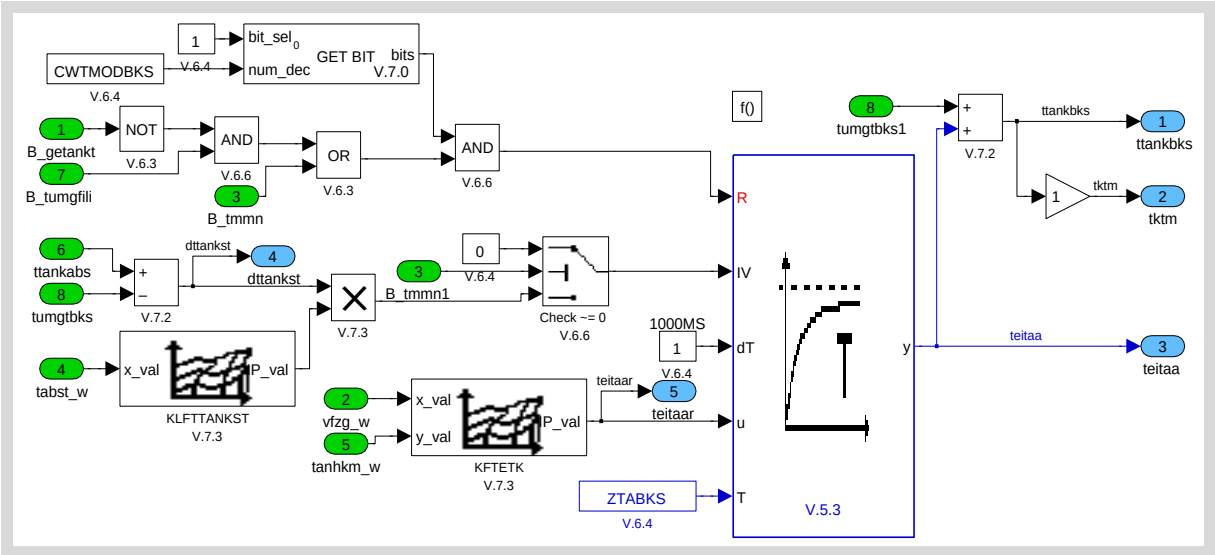

Figure 43.5.10:

Path: FUSL_M408B/OPM_100MS/TTANKMOD

Copyright ©Continental AG. Transmittal, reproduction, dissemination and/or editing of this document as well as utilisation of its contents and communication thereof to others without expressed authorisation are prohibited. Offenders will be held liable for payment of damages. All rights created by patent grant or registration of a utility model or design patent are reserved.

43.5.6.3 TWOELBKS

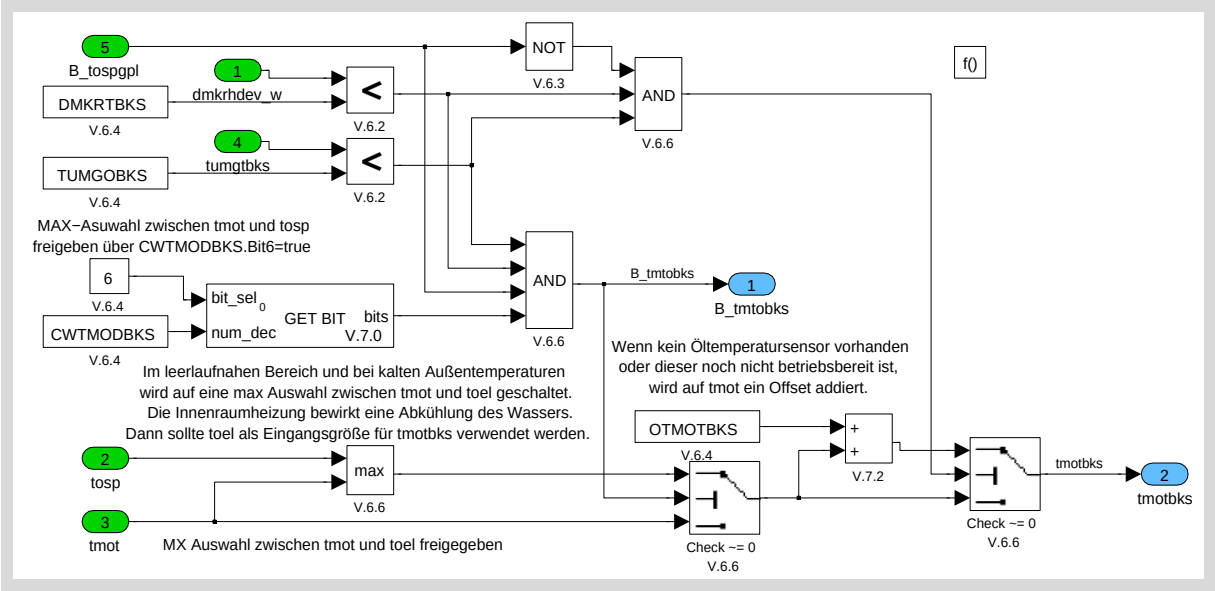

Figure 43.5.11:

Path: FUSL_M408B/OPM_100MS/TWOELBKS

43.5.6.4 SELECT_KFFLAFIN

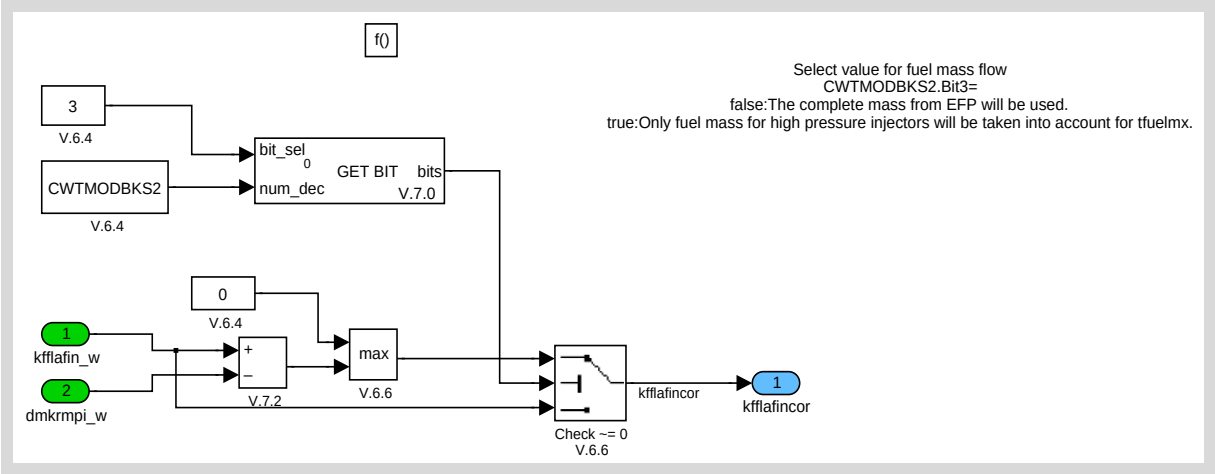

Figure 43.5.12:

Path: FUSL_M408B/OPM_100MS/SELECT_KFFLAFIN

43.5.6.5 MDLDITEMP

Copyright ©Continental AG. Transmittal, reproduction, dissemination and/or editing of this document as well as utilisation of its contents and communication thereof to others without expressed authorisation are prohibited. Offenders will be held liable for payment of damages. All rights created by patent grant or registration of a utility model or design patent are reserved.

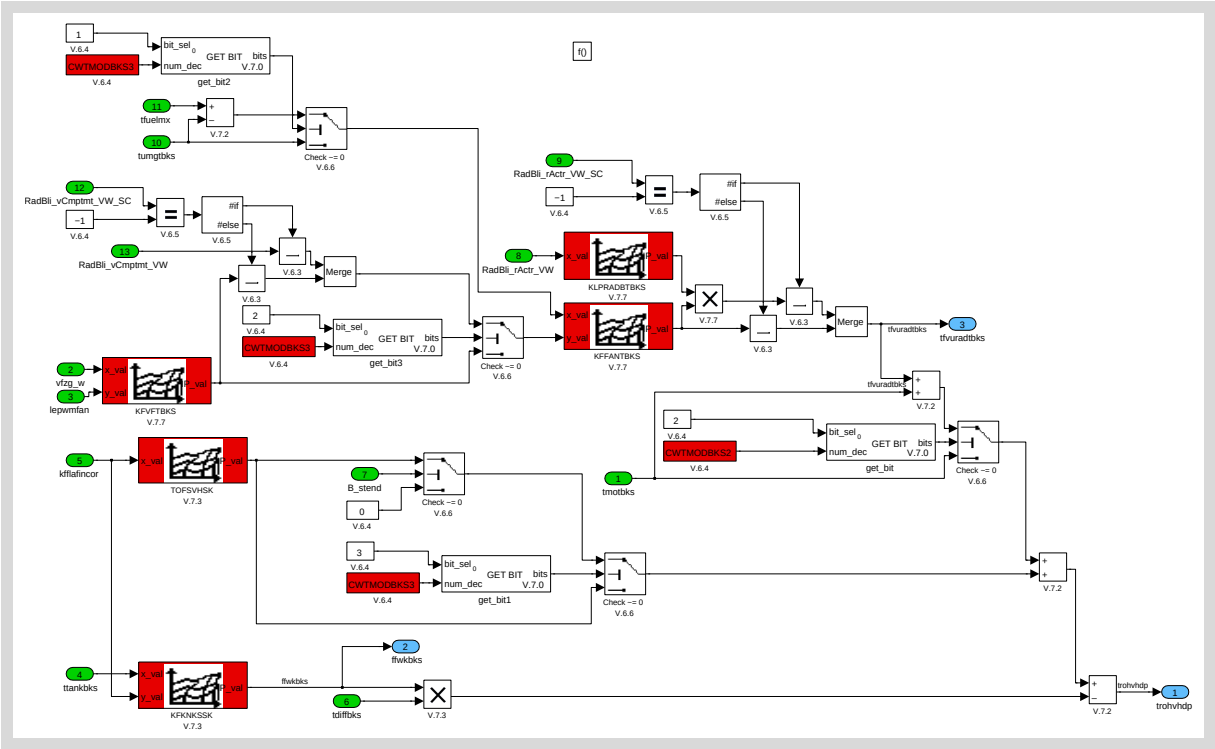

Figure 43.5.13:

Path: FUSL_M408B/OPM_100MS/MDLDITEMP

43.5.6.6 MDLMPITEMP

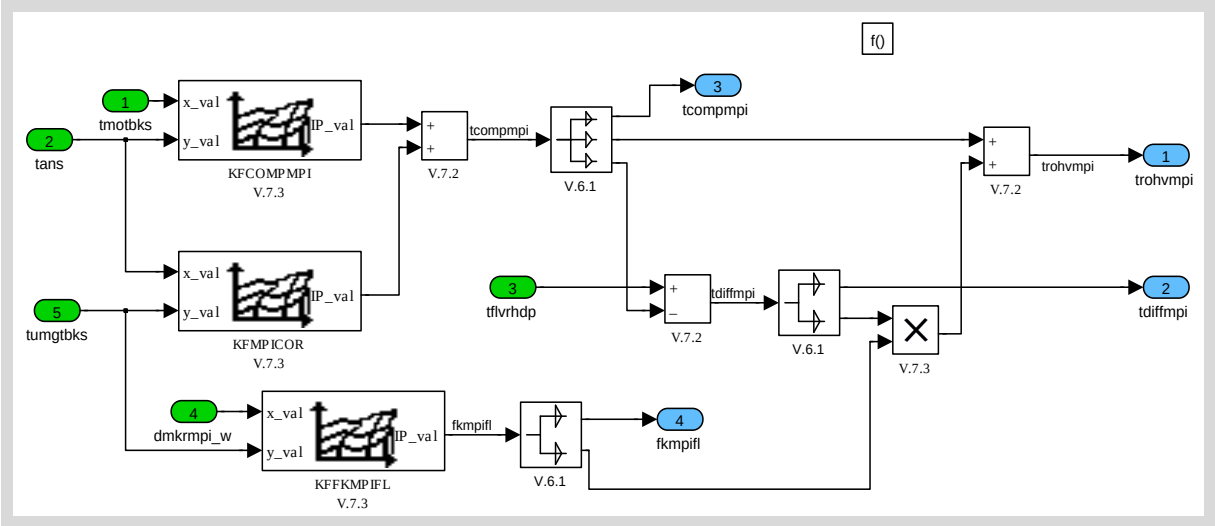

Figure 43.5.14:

Path: FUSL_M408B/OPM_100MS/MDLMPITEMP

Copyright ©Continental AG. Transmittal, reproduction, dissemination and/or editing of this document as well as utilisation of its contents and communication thereof to others without expressed authorisation are prohibited. Offenders will be held liable for payment of damages. All rights created by patent grant or registration of a utility model or design patent are reserved.

43.5.6.7 TEMPFILTER

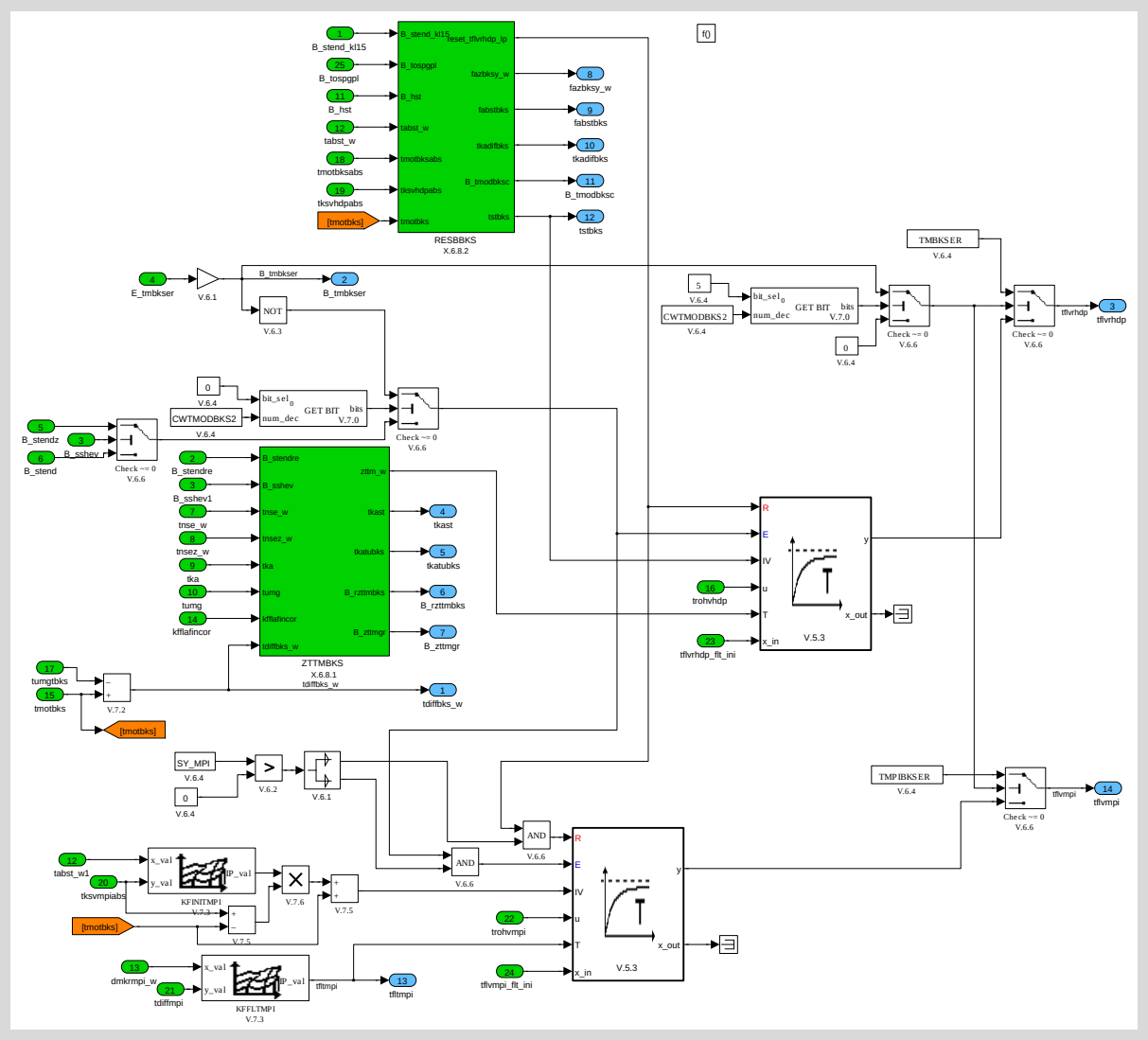

Figure 43.5.15:

Path: FUSL_M408B/OPM_100MS/TEMPFILTER

1.6.7.1 ZTTMBKS

Copyright ©Continental AG. Transmittal, reproduction, dissemination and/or editing of this document as well as utilisation of its contents and communication thereof to others without expressed authorisation are prohibited. Offenders will be held liable for payment of damages. All rights created by patent grant or registration of a utility model or design patent are reserved.

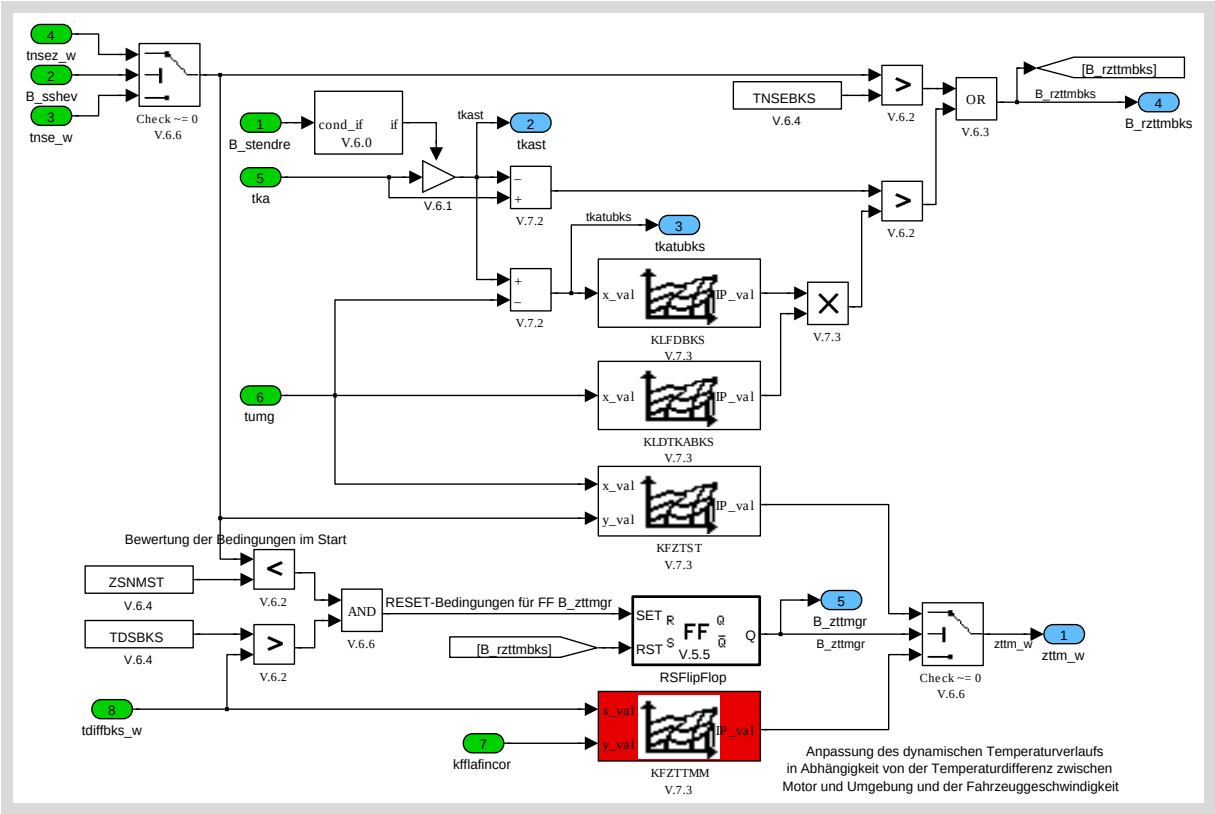

Figure 43.5.16:

Path: FUSL_M408B/OPM_100MS/TEMPFILTER/ZTTMBKS

1.6.7.2 RESBBKS

Copyright ©Continental AG. Transmittal, reproduction, dissemination and/or editing of this document as well as utilisation of its contents and communication thereof to others without expressed authorisation are prohibited. Offenders will be held liable for payment of damages. All rights created by patent grant or registration of a utility model or design patent are reserved.

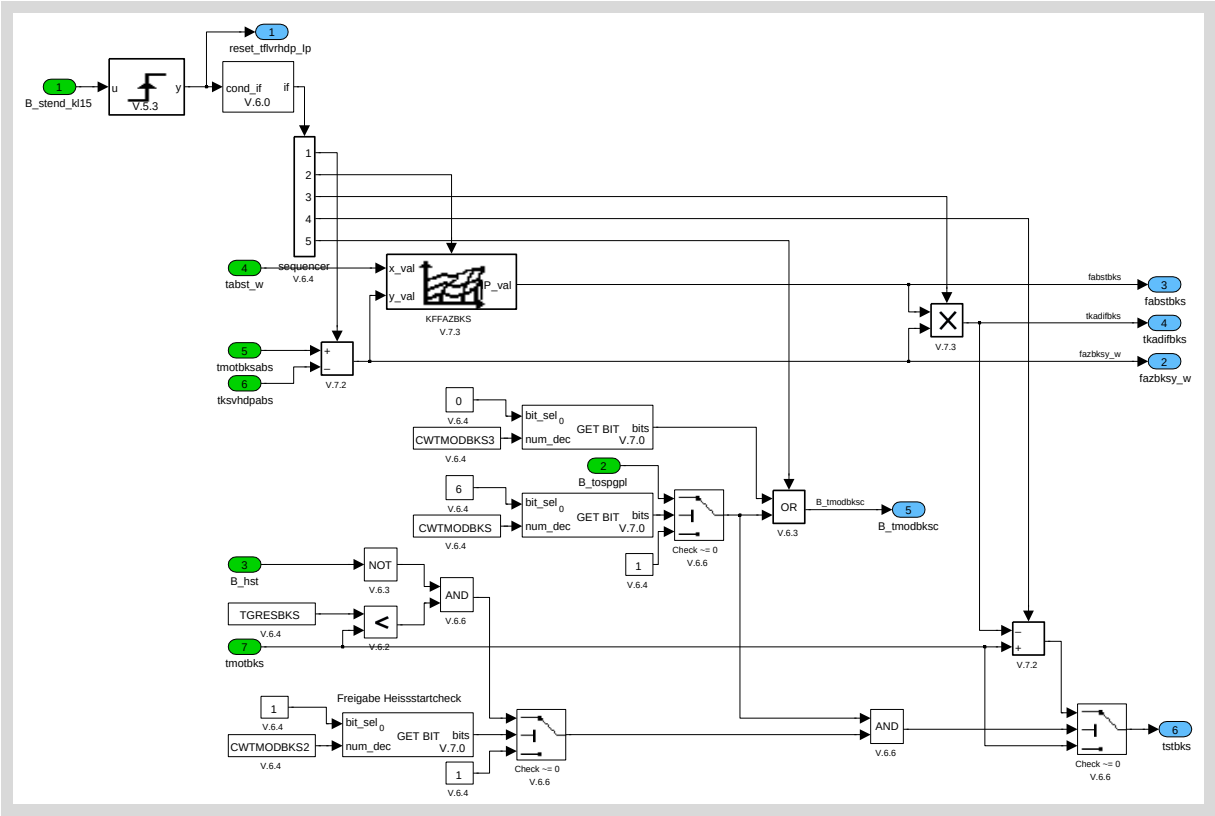

Figure 43.5.17:

Path: FUSL_M408B/OPM_100MS/TEMPFILTER/RESBBKS

Copyright ©Continental AG. Transmittal, reproduction, dissemination and/or editing of this document as well as utilisation of its contents and communication thereof to others without expressed authorisation are prohibited. Offenders will be held liable for payment of damages. All rights created by patent grant or registration of a utility model or design patent are reserved.

43.5.6.8 CLC_TFUELMX

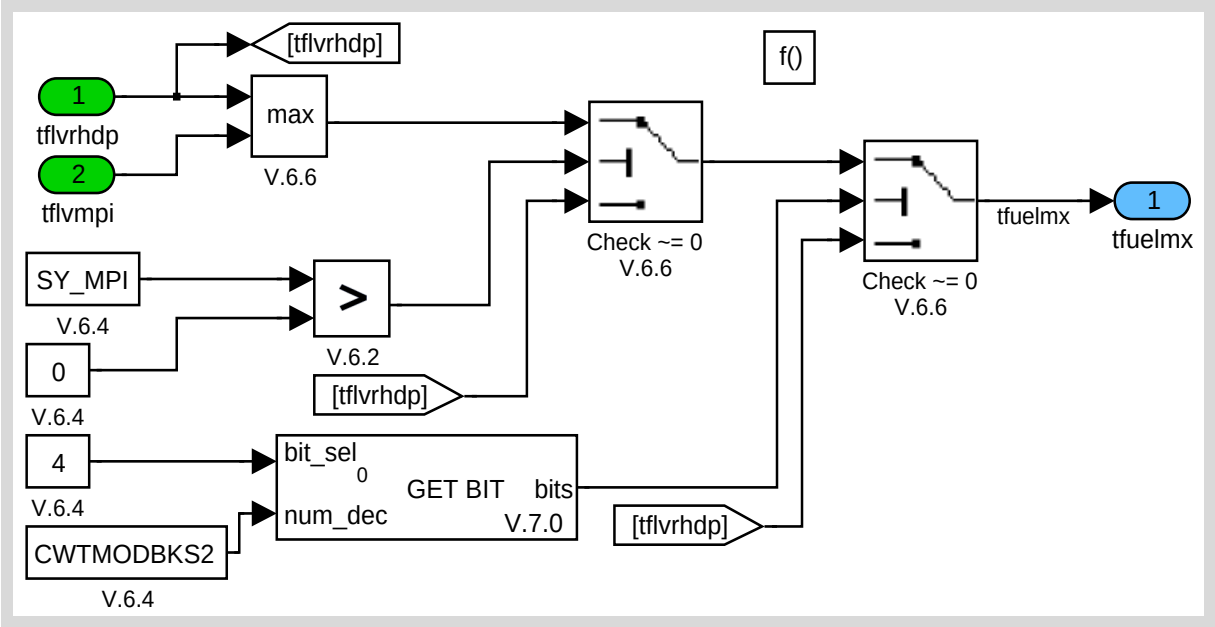

Figure 43.5.18:

Path: FUSL_M408B/OPM_100MS/CLC_TFUELMX

Copyright ©Continental AG. Transmittal, reproduction, dissemination and/or editing of this document as well as utilisation of its contents and communication thereof to others without expressed authorisation are prohibited. Offenders will be held liable for payment of damages. All rights created by patent grant or registration of a utility model or design patent are reserved.

43.5.6.9 POSTDRIVE

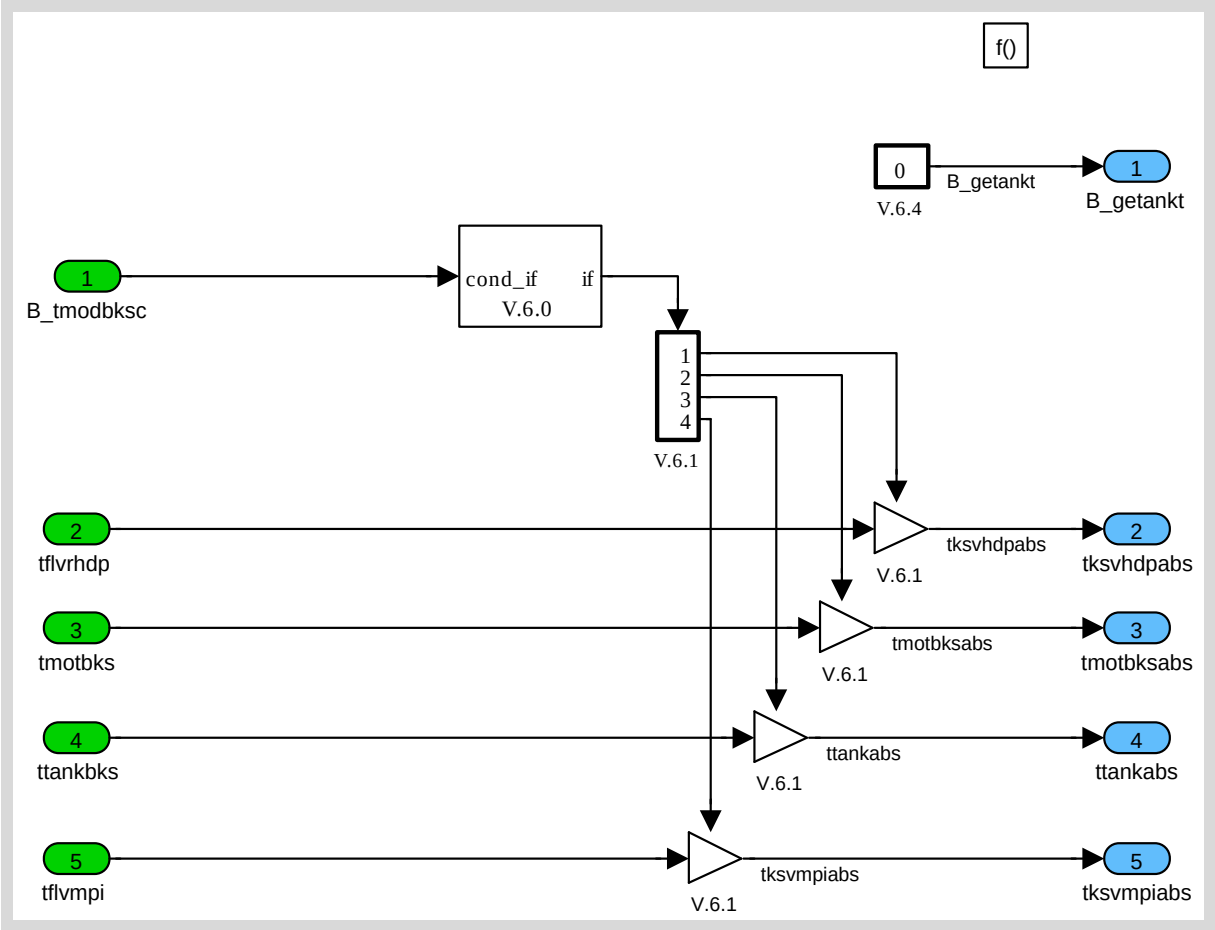

Figure 43.5.19:

Path: FUSL_M408B/OPM_100MS/POSTDRIVE

Copyright ©Continental AG. Transmittal, reproduction, dissemination and/or editing of this document as well as utilisation of its contents and communication thereof to others without expressed authorisation are prohibited. Offenders will be held liable for payment of damages. All rights created by patent grant or registration of a utility model or design patent are reserved.

43.6 Fuel pressure

Data Definition

Name	Mode	Coded Limits	Display Limits	Resolution	Unit
CTR_VP_FUP_MES [2]	V	0... FFFFH	0... 65535	1	-
Sample counter for averaging of fuel pressure sensor raw signal					
FUP	O/V	0... FFFFH	0... 347776	5.3067216	hPa
Fuel pressure					
FUP_H_SAE	O/V	0... FFFFH	0... 655350	10	kPA
PID23 Fuel rail pressure (high range for Diesel and GDI)					
FUP_MES	O/V	0... FFFFH	0... 347776	5.3067216	hPa
Measured fuel pressure					
FUP_SAE	O/V	0... FFFFH	0... 655350	10	kPA
PID 59h - Fuel Rail Pressure (absolute)					
LV_FUP_MES_SEG	V	0... 1H	0 ...1	1	-
Logical variable selecting active pair of buffers for acquisition of pressure sensor voltage samples					
LV_VP_FUP_MES_NOT_VLD	V	0... 1H	0 ...1	1	-
Boolean indicating VP_FUP_MES out of range					
VP_FUP_MES	O/V	0... 7FFFH	0... 4.999847412109	152.588e-6	V
Averaged signal voltage of fuel pressure sensor					
VP_FUP_MES_SUM [2]	V	0... FFFFFFFFH	0... 655.35999985e3	152.588e-6	V
Accumulated signal voltage of fuel pressure sensor					

Input Data

AMP {p. 13840}	C_VP_FUP_MES_MAX_DIAG {p. 12168}	C_VP_FUP_MES_MIN_DIAG {p. 12168}	FUP_AD_OFS {p. 11895}
FUP_EFP {p. 11905}	FUP_SP {p. 11952}	LV_FUP_LIH_H_PRS_CTL_REQ {p. 12184}	LV_FUP_MES_LIH_REQ {p. 12184}
LV_ST_END {p. 7530}	MFF_SP_FUP_CTL {p. 11463}		

Calibration Data

Name	Mode	Coded Limits	Display Limits	Resolution	Unit
C_FUP_EFP_OFS_RED	V	8000... 7FFFH	-86945.33 ...86942.67	2.6533608	hPa
Offset for fuel pressure default value in case of error detection					
C_FUP_MES_CRLC	V	0... FFH	0... 0.99609375	0.00390625	-
Filter constant for the measured fuel pressure					
C_FUP_MES_LIM_INC	V	0... FFFFH	0... 347776	5.3067216	hPa
Gradient limitation for fuel pressure increment during limphome request					
C_FUP_MES_MAX	V	0... FFFFH	0... 347776	5.3067216	hPa
Maximum limit for measured fuel pressure					
C_FUP_MES_SLOP	V	0... FFFFH	0... 347776	5.3067216	hPa/V

Copyright ©Continental AG. Transmittal, reproduction, dissemination and/or editing of this document as well as utilisation of its contents and communication thereof to others without expressed authorisation are prohibited. Offenders will be held liable for payment of damages. All rights created by patent grant or registration of a utility model or design patent are reserved.

Name	Mode	Coded Limits	Display Limits	Resolution	Unit
Slope of high pressure fuel sensor linear characteristic					
C_VP_FUP_MES_OFS	V	8000... 7FFFH	-5... 4.999847412109	152.588e-6	V
Voltage offset of high pressure fuel sensor linear characteristic					
IP_FUP_MES_LIM_DEC	V	0... FFFFH	0... 347776	5.3067216	hPa
LDP_MFF_SP_FUP_MES_LIM_DEC	4	0... FFFFH	0... 1389	0.02119478	mg/stk
Gradient limitation for fuel pressure decrement during limphome request					
LC_FUP_RAW_CLC_SWI	V	0... 1H	0 ...1	1	-
Switch for FUP_RAW calculation					
LC_VP_FUP_MES_LIM_ENA	V	0... 1H	0 ...1	1	-
Enabling VP_FUP_MES limitation					

▶ Import actions:

ACTION_INFR_GetVFupSens(**OUT** <PRM_VP_FUP_RAW>)

▶ General Information

Within this module the raw signal voltage of high pressure sensor - which is located in the fuel rail - is acquired, averaged, converted and filtered. Processed pressure value is provided as main module output.
Raw sensor voltage is provided by Import Action 'ACTION_INFR_GetVFupSens'.
Two alternating pairs of buffers are used for synchronisation of signal acquisition at 1ms recurrence, and signal processing at 10 ms recurrence (LV_ST_END = 0) / segment recurrence (LV_ST_END = 1), respectively. Thus read/write inconsistencies due to asynchronous task execution are prevented.

▶ Signal flow diagram:

Copyright ©Continental AG. Transmittal, reproduction, dissemination and/or editing of this document as well as utilisation of its contents and communication thereof to others without expressed authorisation are prohibited. Offenders will be held liable for payment of damages. All rights created by patent grant or registration of a utility model or design patent are reserved.

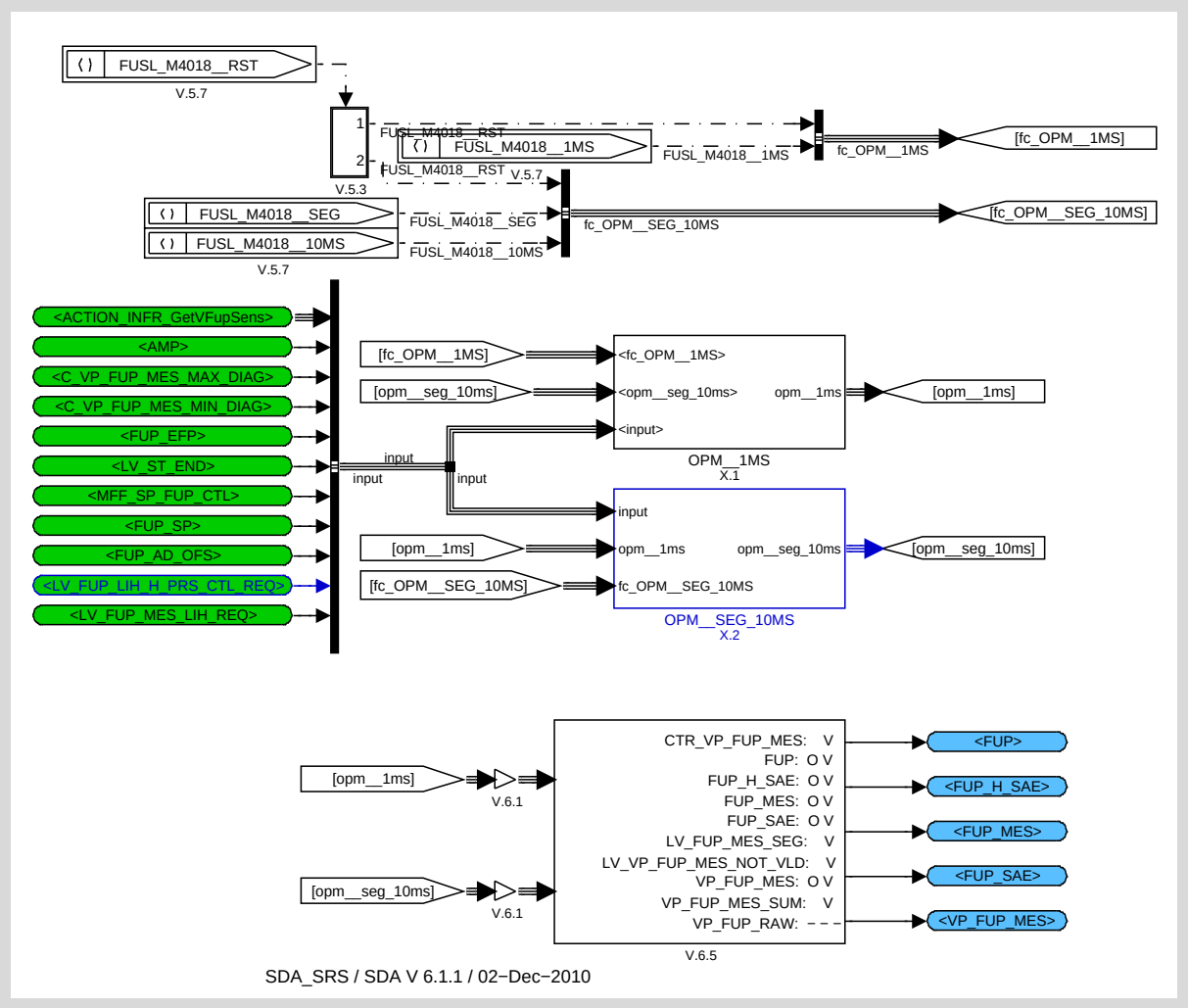

Figure 43.6.1: Module interfaces and task scheduling

43.6.1 Signal acquisition

General Information

Sensor voltage is sampled at 1 ms recurrence and accumulated. In parallel number of acquired samples is counted in order to allow for signal averaging over variable segment times.

Application Conditions

Initialisation:	RST
Activation:	1
Deactivation:	0
Recurrence:	1MS

Function Description

Copyright ©Continental AG. Transmittal, reproduction, dissemination and/or editing of this document as well as utilisation of its contents and communication thereof to others without expressed authorisation are prohibited. Offenders will be held liable for payment of damages. All rights created by patent grant or registration of a utility model or design patent are reserved.

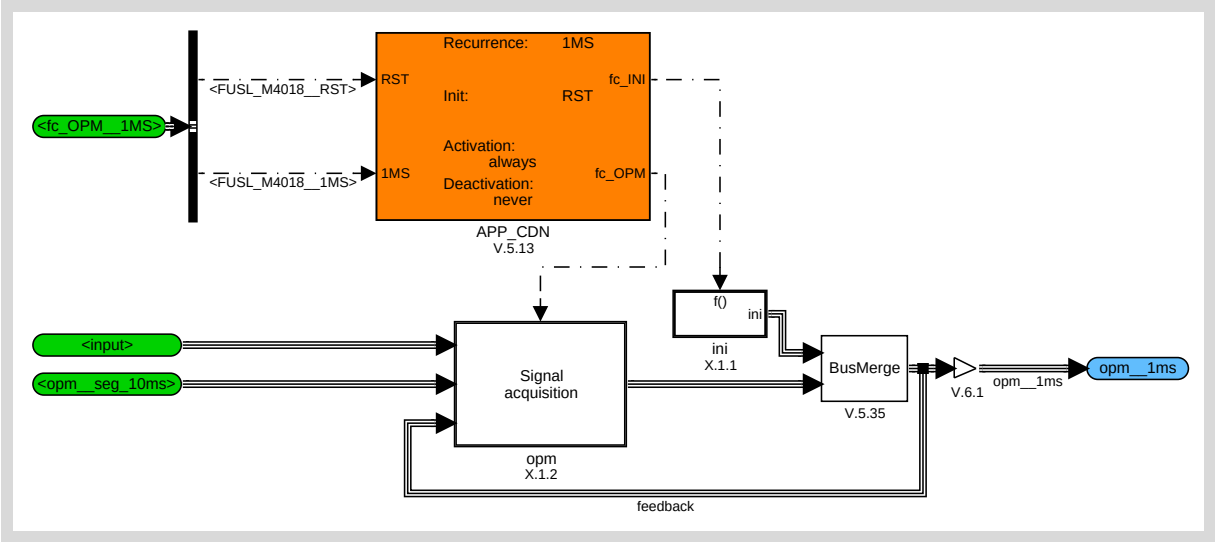

Figure 43.6.2: Signal Acquisition

43.6.1.1 Initialisation

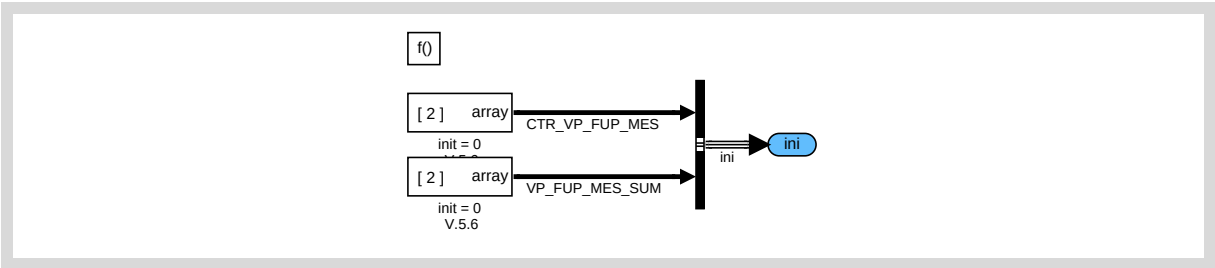

Figure 43.6.3: Initialisation

43.6.1.2 Signal buffering

Raw voltage of sensor is accumulated for each 10 ms / segment recurrence at 1 ms sample rate. Number of considered samples is counted accordingly in active buffer selected by LV_FUP_MES_SEG.

Copyright ©Continental AG. Transmittal, reproduction, dissemination and/or editing of this document as well as utilisation of its contents and communication thereof to others without expressed authorisation are prohibited. Offenders will be held liable for payment of damages. All rights created by patent grant or registration of a utility model or design patent are reserved.

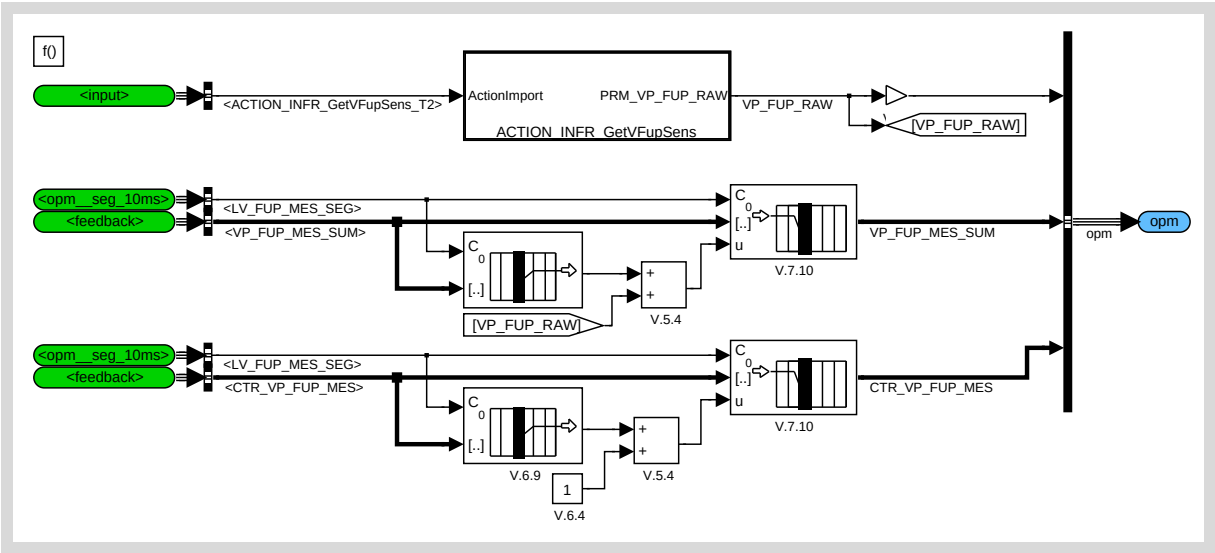

Figure 43.6.4: Signal buffering

43.6.2 Signal processing

▶ General Information

Raw sensor signal voltage is averaged over one recurrence, converted into pressure value according to linear sensor characteristic, and low-pass filtered.

▶ Application Conditions

Initialisation: `RST`

Deactivation: `0 or if activation-condition of other event is true`

Recurrence:
```
SEG activated if LV_ST_END==1
10MS activated if LV_ST_END==0
```

▶ Function Description

Copyright ©Continental AG. Transmittal, reproduction, dissemination and/or editing of this document as well as utilisation of its contents and communication thereof to others without expressed authorisation are prohibited. Offenders will be held liable for payment of damages. All rights created by patent grant or registration of a utility model or design patent are reserved.

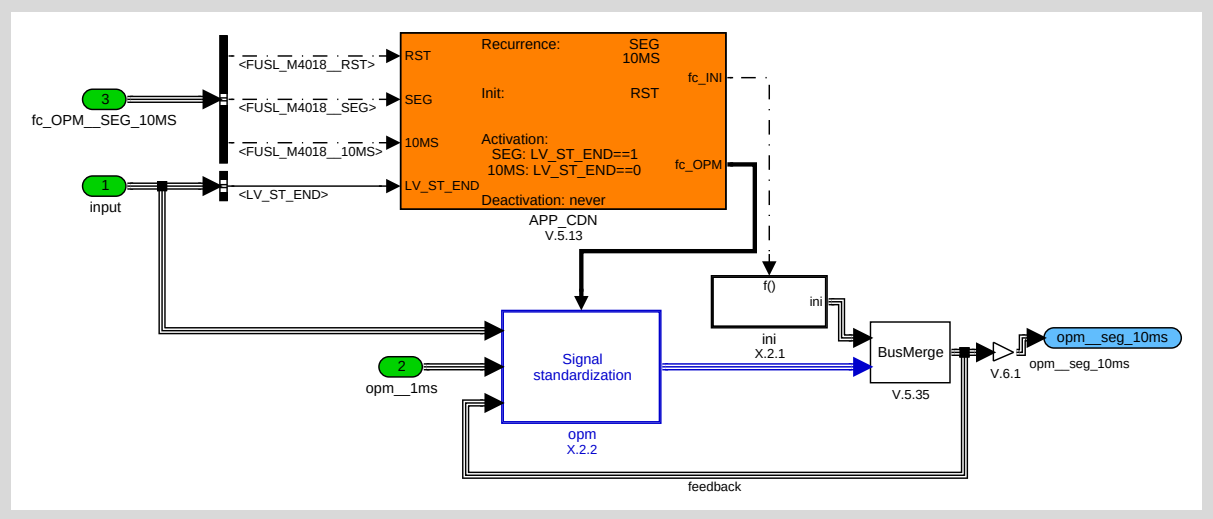

Figure 43.6.5: Signal processing

43.6.2.1 Initialisation

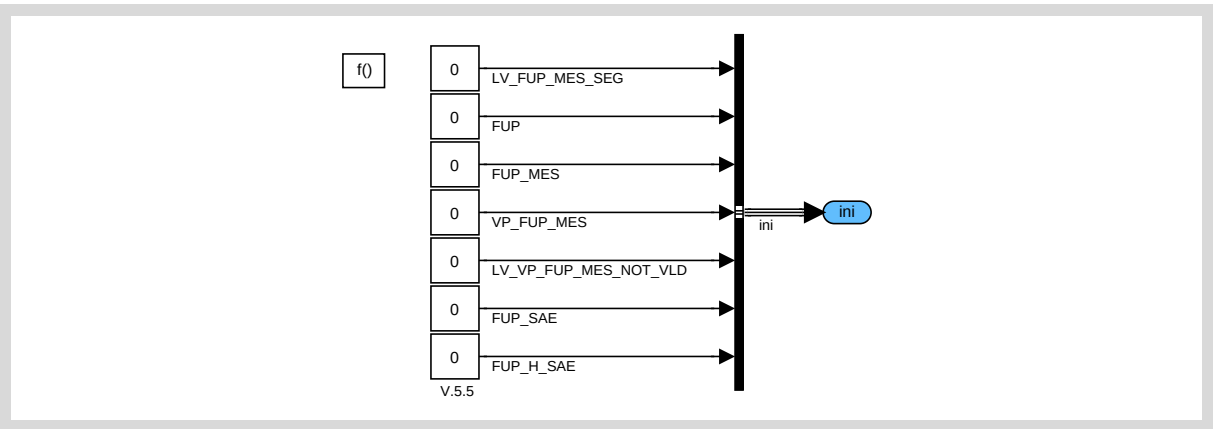

Figure 43.6.6: Initialisation

43.6.2.2 Signal averaging, conversion and filtering

Calculation of fuel pressure value is split into calculations providing measured voltage pin of fuel high pressure sensor, measured raw fuel high pressure value and final value of fuel high pressure after filtering.

Copyright ©Continental AG. Transmittal, reproduction, dissemination and/or editing of this document as well as utilisation of its contents and communication thereof to others without expressed authorisation are prohibited. Offenders will be held liable for payment of damages. All rights created by patent grant or registration of a utility model or design patent are reserved.

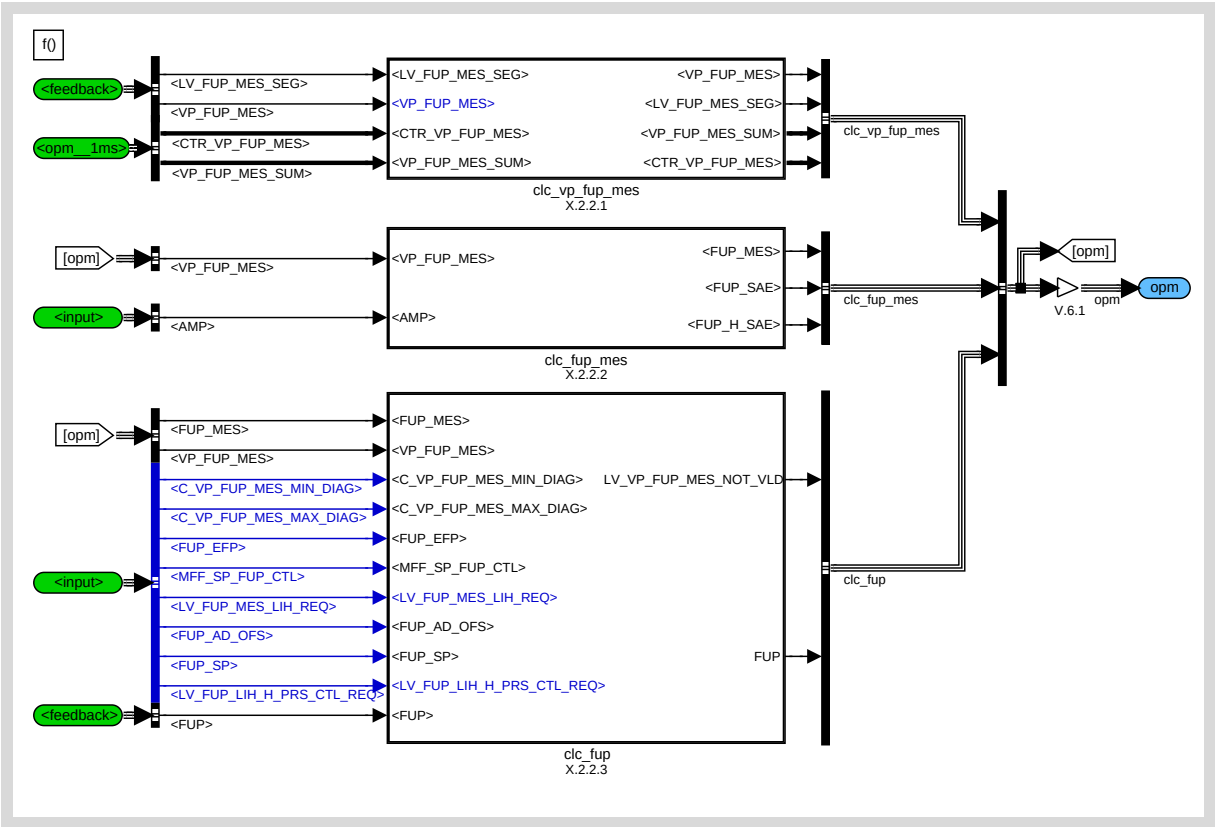

Figure 43.6.7: Signal averaging, conversion and filtering

43.6.2.2.1 Signal averaging

At first switching of alternative buffers is performed to ensure data consistency during read process. Next, signal average and buffer reset are calculated of recent recurrence.

Copyright ©Continental AG. Transmittal, reproduction, dissemination and/or editing of this document as well as utilisation of its contents and communication thereof to others without expressed authorisation are prohibited. Offenders will be held liable for payment of damages. All rights created by patent grant or registration of a utility model or design patent are reserved.

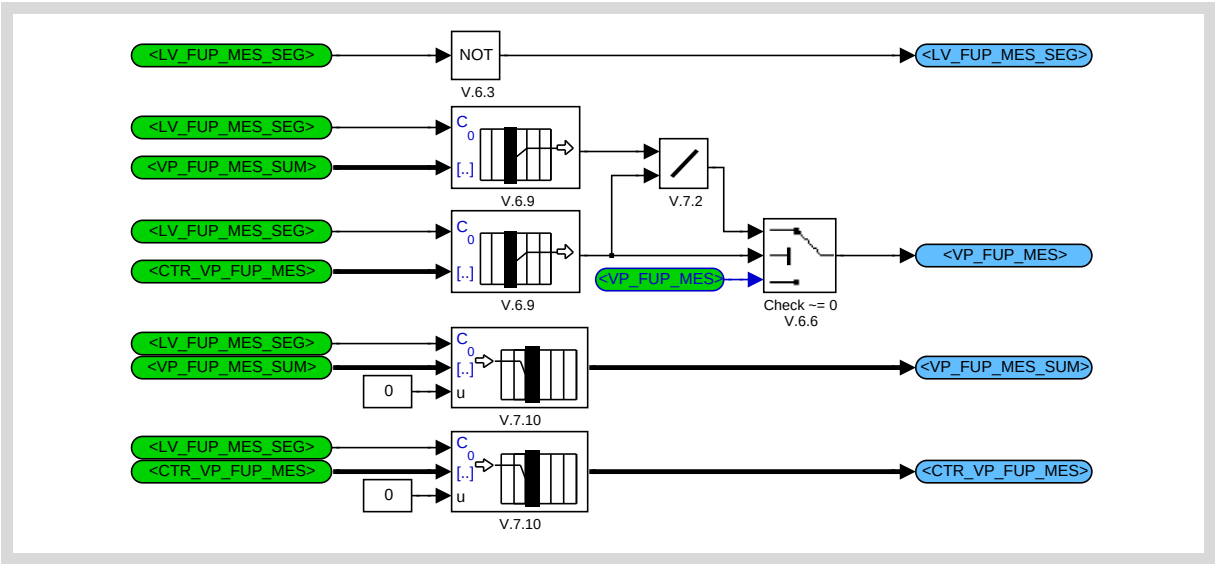

Figure 43.6.8: Signal averaging

43.6.2.2.2 Signal conversion

Signal conversion from voltage to pressure takes place and outputs for scan tool are provided.

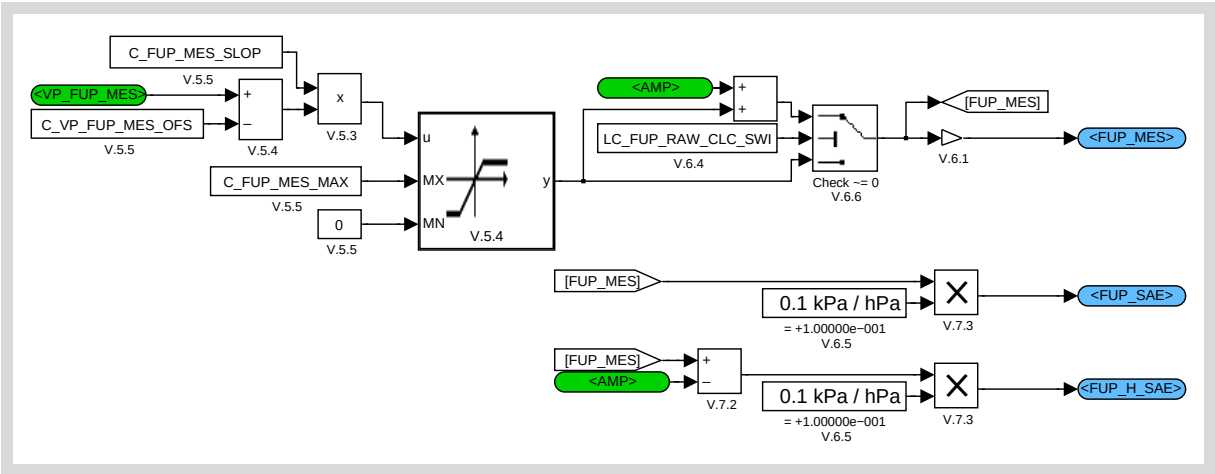

Figure 43.6.9:

43.6.2.2.3 Signal filtering and limphome reaction

In case of an error inside the sensor voltage and during debouncing of the sensor voltage error, fuel pressure setpoint FUP_SP is used. After fuel pressure error debouncing and request of limp home due to error detection, a replacement value for fuel pressure in rail is applied. It is based on pressure value in low pressure fuel system caused by fuel pressure decrease dependent to MFF_SP_FUP_CTL. An additional constant offset can be applied to account for typical pressure difference between mounting location of low pressure sensor and within fuel rail.

Finally PT1 low-pass filtering is applied to measured fuel pressure.

Copyright ©Continental AG. Transmittal, reproduction, dissemination and/or editing of this document as well as utilisation of its contents and communication thereof to others without expressed authorisation are prohibited. Offenders will be held liable for payment of damages. All rights created by patent grant or registration of a utility model or design patent are reserved.

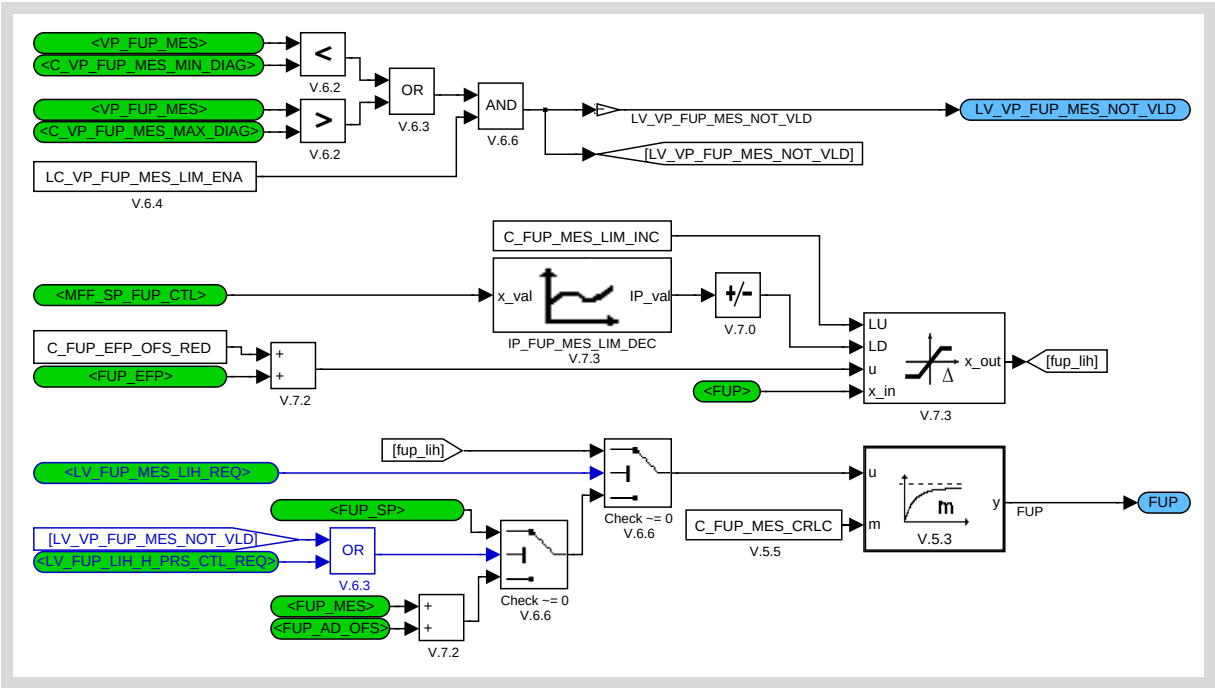

Figure 43.6.10:

Copyright ©Continental AG. Transmittal, reproduction, dissemination and/or editing of this document as well as utilisation of its contents and communication thereof to others without expressed authorisation are prohibited. Offenders will be held liable for payment of damages. All rights created by patent grant or registration of a utility model or design patent are reserved.

43.7 Fuel pressure (Appl. Inc.)

Data Definition

Name	Mode	Coded Limits	Display Limits	Resolution	Unit
CTR_FUP_MIN_AD	V	0... FFH	0... 255	1	-
Counter for FUP_MIN adaption					
FUP_AD_OFS	O/V	8000... 7FFFH	-173890 ...173884	5.30669108	hPa
Adaptation offset value for fuel pressure					
FUP_MIN_AD	O/V	0... FFFFH	0... 347776	5.3067216	hPa
Adapted minimum fuelpressure after start					
FUP_MIN_AD_TMP	V	0... FFFFH	0... 347776	5.3067216	hPa
Minimum fuelpressure after start					
FUP_SUB	O/V	0... FFFFH	0... 347776	5.3067216	hPa
Substitute value for the fuel pressure					
IDX_FUP_MIN_AD	O/V	0... 5H	1 ...6	1	-
Index of ID_FUP_MIN_AD for adaption of FUP_MIN after start					
LV_FUP_AD_AUTH	V	0... 1H	0 ...1	1	-
Logical variable indicating fuel pressure adaptation allowed					
LV_FUP_AD_INH	V	0... 1H	0 ...1	1	-
Logical variable indicating fuel pressure adaptation inhibited					
LV_FUP_MIN_AD_ACT	V	0... 1H	0 ...1	1	-
Logical varible for min FUP adaption active					
LV_FUP_MIN_AD_ENA_MEM	V	0... 1H	0 ...1	1	-
Minimum fuel pressure adaptation enabled					

Input Data

CYC_CAST {p. 8507}	CYC_ST {p. 8507}	FUP {p. 11886}	FUP_EFP {p. 11905}
FUP_MES {p. 11886}	LV_ES {p. 7530}	LV_FUP_AD_ENA {p. 12184}	LV_FUP_MES_LIH_REQ {p. 12184}
LV_FUP_MIN_AD_ENA {p. 12184}	LV_MFF_CST_FUP_ACT {p. 8444}	LV_ST_INJ_AUTH {p. 8444}	LV_STST_STOP_CYC {p. 8458}
T_AST {p. 8436}	TCO {p. 8846}	TCO_ST {p. 8846}	

Calibration Data

Name	Mode	Coded Limits	Display Limits	Resolution	Unit
C_CTR_FUP_MIN_AD_INI	-	0... FFH	0... 255	1	-
Counter initial value for FUP_MIN adaption					
C_CYC_ST_OFS_FUP_MIN_AD	-	0... FFH	0... 255	1	-
CYC offset to detect regular high pressure start for FUP min adaption					
C_FUP_AD_COR	-	0... FFFFH	0... 347776	5.3067216	hPa
Correction value for the fuel pressure adaptation (influence high pressure pump)					
C_FUP_AD_LGRD	-	0... FFFFH	0... 347776	5.3067216	hPa
Gradient limitation for removal of adaptation value					

Copyright ©Continental AG. Transmittal, reproduction, dissemination and/or editing of this document as well as utilisation of its contents and communication thereof to others without expressed authorisation are prohibited. Offenders will be held liable for payment of damages. All rights created by patent grant or registration of a utility model or design patent are reserved.

Name	Mode	Coded Limits	Display Limits	Resolution	Unit
C_FUP_AD_MAX	-	8000... 7FFFH	-173890 ...173884	5.30669108	hPa
Maximum allowed fuel pressure adaptation value (maximum fuel pressure sensor error)					
C_FUP_AD_MIN	-	8000... 7FFFH	-173890 ...173884	5.30669108	hPa
Minumum allowed fuel pressure adaptation value (minimum fuel pressure sensor error)					
C_FUP_AD_TOL	-	0... FFFFH	0... 347776	5.3067216	hPa
Fuel pressure threshold to remove adaptation value					
C_FUP_MES_AD_TOL	-	0... FFFFH	0... 347776	5.3067216	hPa
Maximum measured fuel pressure to allow adaptation					
C_FUP_SUB_OFS	-	8000... 7FFFH	-86945.33 ...86942.67	2.6533608	hPa
Offset for calculation of fuel pressure substitute value based on low pressure					
C_T_AST_MAX_FUP_MIN_AD	V	0... FFFFH	0... 6553.5	0.1	s
Maximum time after start to adapt FUP_MIN					
C_TCO_FUP_AD_BOL	-	0... FEH	-48... 142.5	0.75	°C
Minimum coolant temperature for allowing adaptation					
C_TCO_FUP_AD_TOL	-	0... FEH	-48... 142.5	0.75	°C
Maximum coolant temperature for allowing adaptation					
ID_FUP_MIN_AD	O/V/S	0... FFFFH	0... 347776	5.3067216	hPa
LDPM_TCO_ST_FUP_MIN_AD	6	0... FEH	-48... 142.5	0.75	°C
Adaptive Map for FUP_MIN adaption					

▶ General Information

Due to the fact that the fuel pressure sensor for the high pressure circuit has a constant error independent on the measured pressure the absolute error is highest at low measured fuel pressure level. The fuel pressure in the low pressure circuit has nearly the same as the high pressure in the fuel rail. Only the pressure loss because of the high pressure pump is different. This leads to the fact that the fuel pressure sensor value in the high pressure circuit can be adapted with the value of the low pressure circuit fuel pressure sensor under certain conditions.

In case of no fuel pressure sensor failure of the low pressure circuit and the high pressure circuit an adaptation is applied. This is only possible if the coolant temperature value is within specified limits and the measured fuel pressure sensor value is below a certain limit. This is done because of the possibility of high pressure in the fuel rail, where no adaptation is possible.

If all this conditions are fulfilled the fuel pressure value of the low fuel pressure sensor is taken as reference value when the engine starts turning. This is done because of the fuel pressure build up time for the low pressure circuit. If no reference value is possible the last value will be taken out of the permanent memory.

If a certain fuel pressure value is reached the adaptation value is skipped and will be removed by a gradient limitation.
The limp home value of the fuel pressure is also created in this function. Depending on the error flag of the fuel pressure sensor a substitute will be taken.

In case of checksum error of the EEPROM or for an brand new ECU all values of the MAP ID_FUP_MIN_AD are set to 0 hPA.

▶ Application Conditions

Initialisation: `RST, ES2ERU, NVMINI, NVMRES, NVMSTO`

Copyright ©Continental AG. Transmittal, reproduction, dissemination and/or editing of this document as well as utilisation of its contents and communication thereof to others without expressed authorisation are prohibited. Offenders will be held liable for payment of damages. All rights created by patent grant or registration of a utility model or design patent are reserved.

Activation: SEG: always
10MS: always
FIRST_TOOTH: always

Deactivation: never

Recurrence: SEG, 10MS, FIRST_TOOTH

▶ Function Description

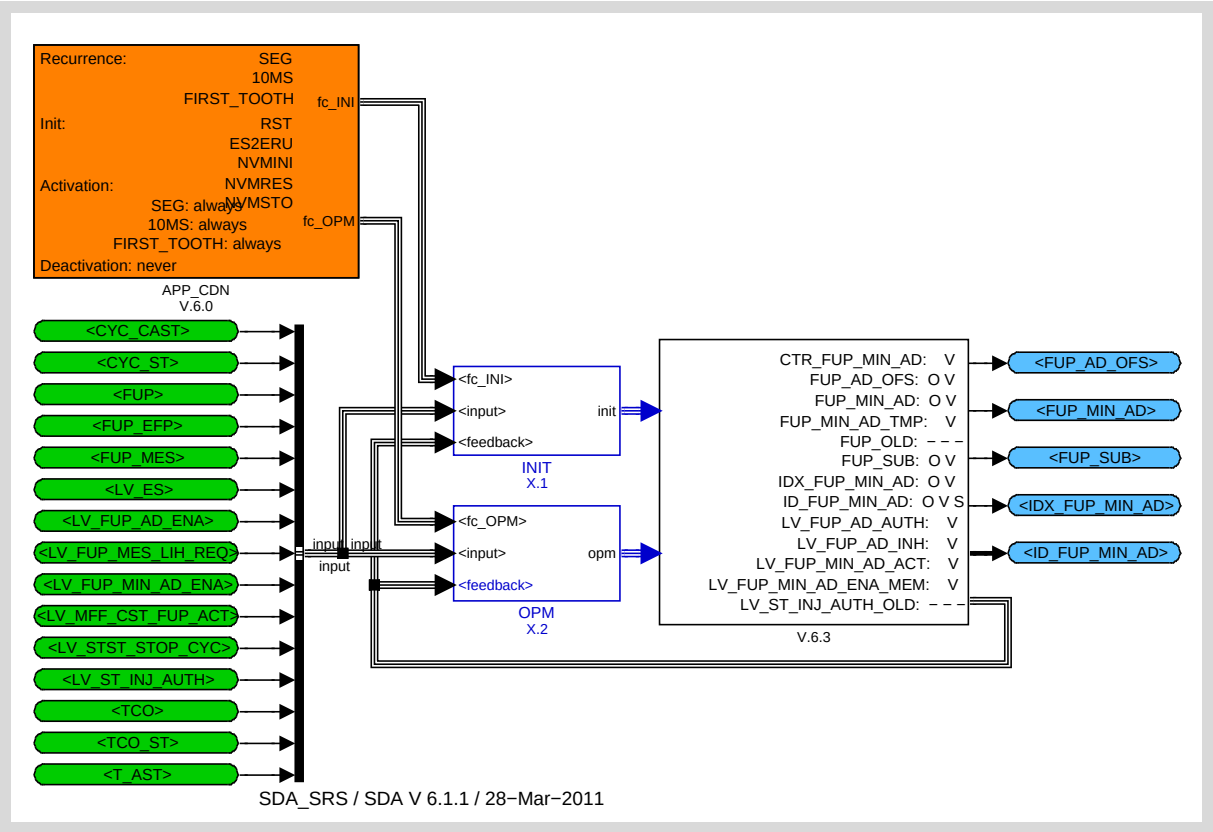

Figure 43.7.1:

43.7.1 Splitting of initialisation tasks

43.7.1.1 Initialisation on reset

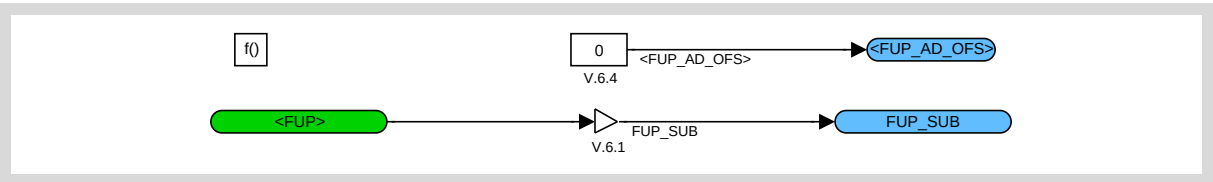

Figure 43.7.2:

Copyright ©Continental AG. Transmittal, reproduction, dissemination and/or editing of this document as well as utilisation of its contents and communication thereof to others without expressed authorisation are prohibited. Offenders will be held liable for payment of damages. All rights created by patent grant or registration of a utility model or design patent are reserved.

43.7.1.2 Initalisation on reset and transition from engine stop to engine run

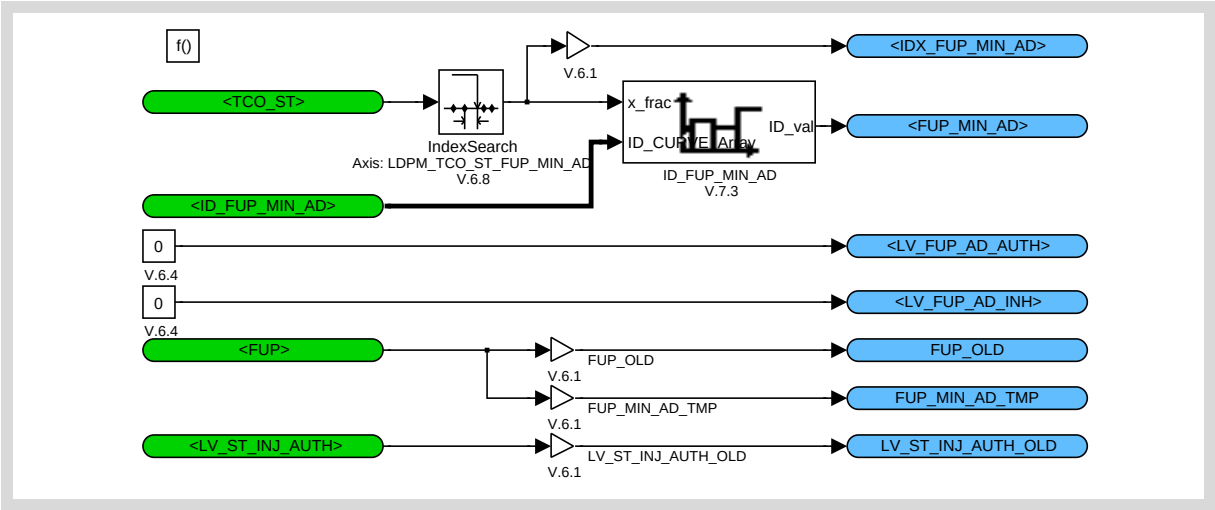

Figure 43.7.3:

Copyright ©Continental AG. Transmittal, reproduction, dissemination and/or editing of this document as well as utilisation of its contents and communication thereof to others without expressed authorisation are prohibited. Offenders will be held liable for payment of damages. All rights created by patent grant or registration of a utility model or design patent are reserved.

43.7.1.3 Initialisation and restorage of variables from non volatile memory

43.7.1.4 Storage of variables from non volatile memory

43.7.2 Splitting of calculation tasks

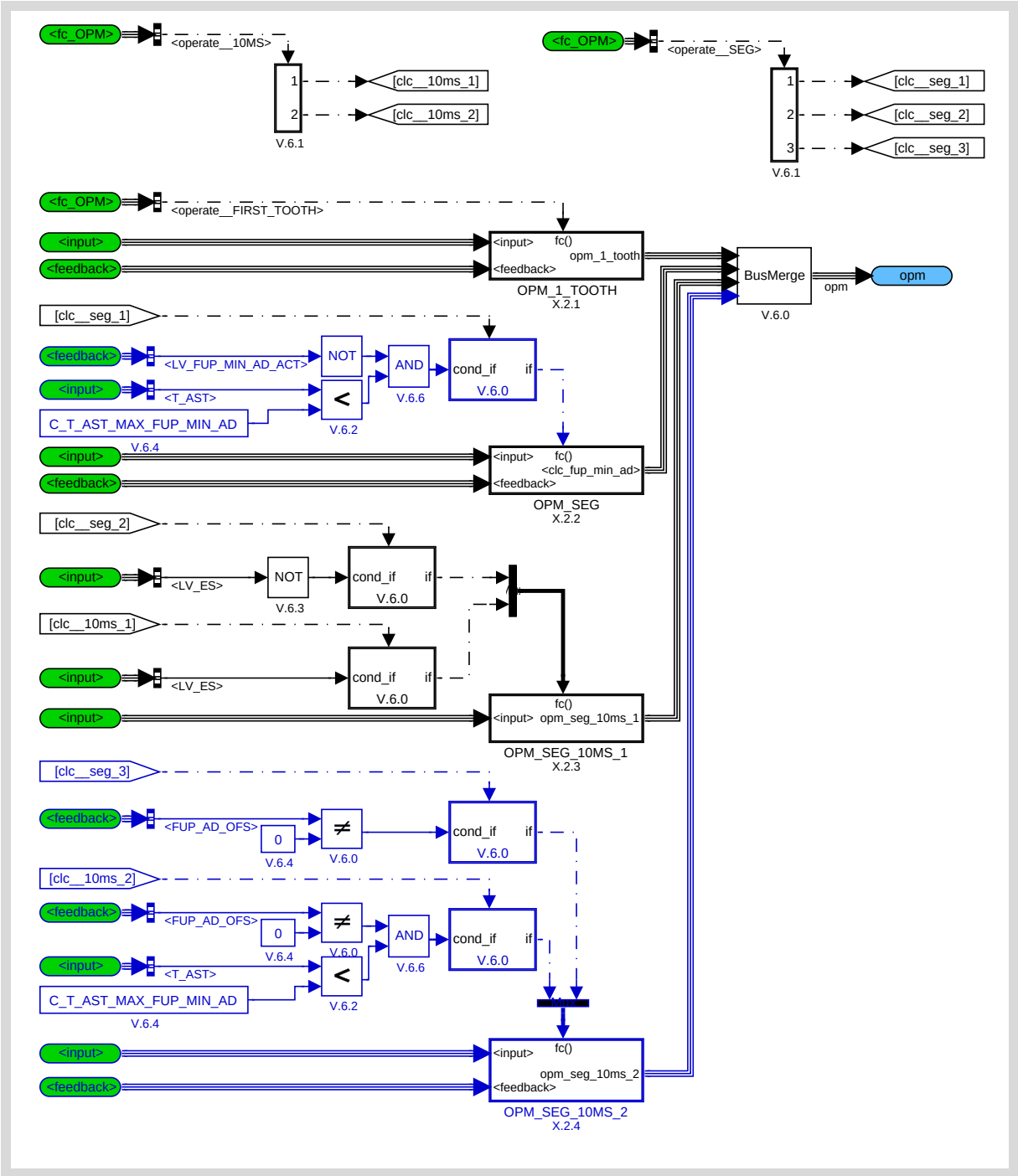

Figure 43.7.4:

Copyright ©Continental AG. Transmittal, reproduction, dissemination and/or editing of this document as well as utilisation of its contents and communication thereof to others without expressed authorisation are prohibited. Offenders will be held liable for payment of damages. All rights created by patent grant or registration of a utility model or design patent are reserved.

43.7.2.1 FIRST_TOOTH TASKS

43.7.2.1.1 Calculation of LV_FUP_AD_AUTH

Depended on measured fuel pressure level the adaptation can not be allowed, due to possible high pressure in the fuel rail. The coolant temperature can also have an influence to the adaptation result. The adaptation is only enabled on FARM premission.
The adaptation cannot be allowed when Startstop cycle is requested.

Note: This function is only calculated at the first valid tooth.

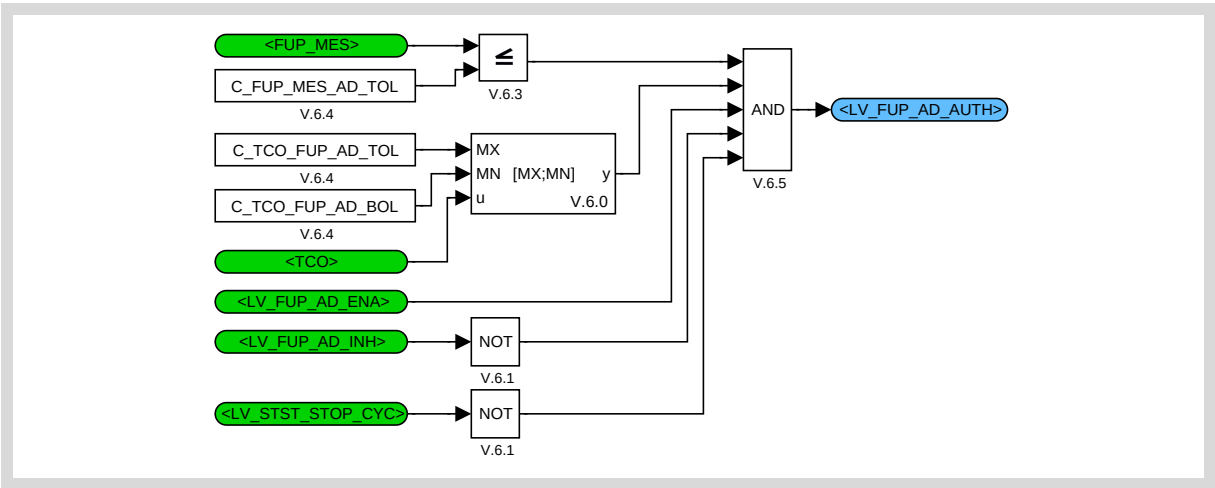

Figure 43.7.5:

43.7.2.1.2 Calculation of FUP_AD_OFS

The adaptation value is taken when the engine starts turning and the adaptation is allowed. The value, which will be adapted, is the fuel pressure value of the low pressure circuit without the influence of the high pressure pump. Two limits prevent a too high or too low adapted value.

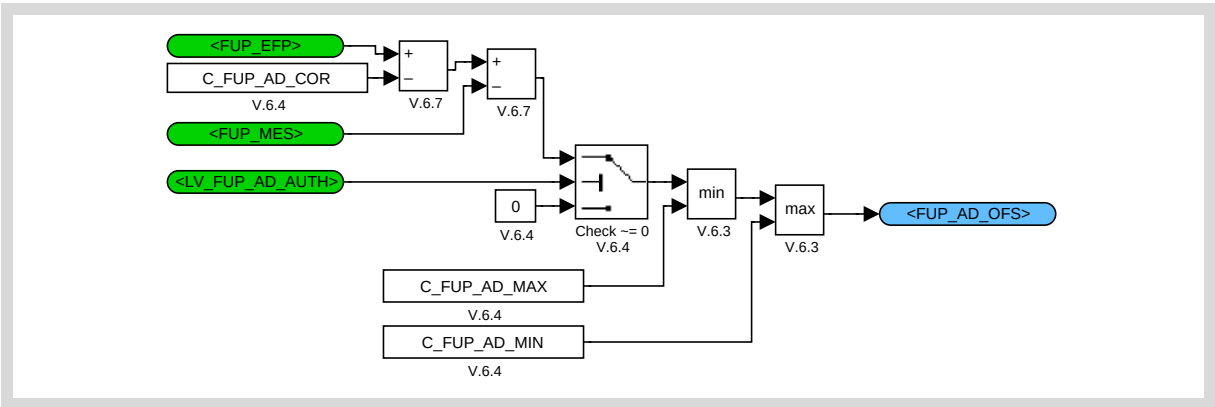

Figure 43.7.6:

Copyright ©Continental AG. Transmittal, reproduction, dissemination and/or editing of this document as well as utilisation of its contents and communication thereof to others without expressed authorisation are prohibited. Offenders will be held liable for payment of damages. All rights created by patent grant or registration of a utility model or design patent are reserved.

43.7.2.2 Segment synchronous task

43.7.2.2.1 Calculation of fuel pressure minimum adaptation

43.7.2.2.1.1 Application of adapted values

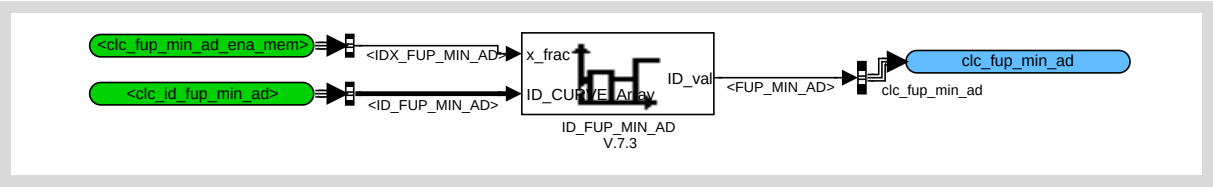

Figure 43.7.7:

43.7.2.2.1.2 Enabling of fuel pressure minimum adaptation

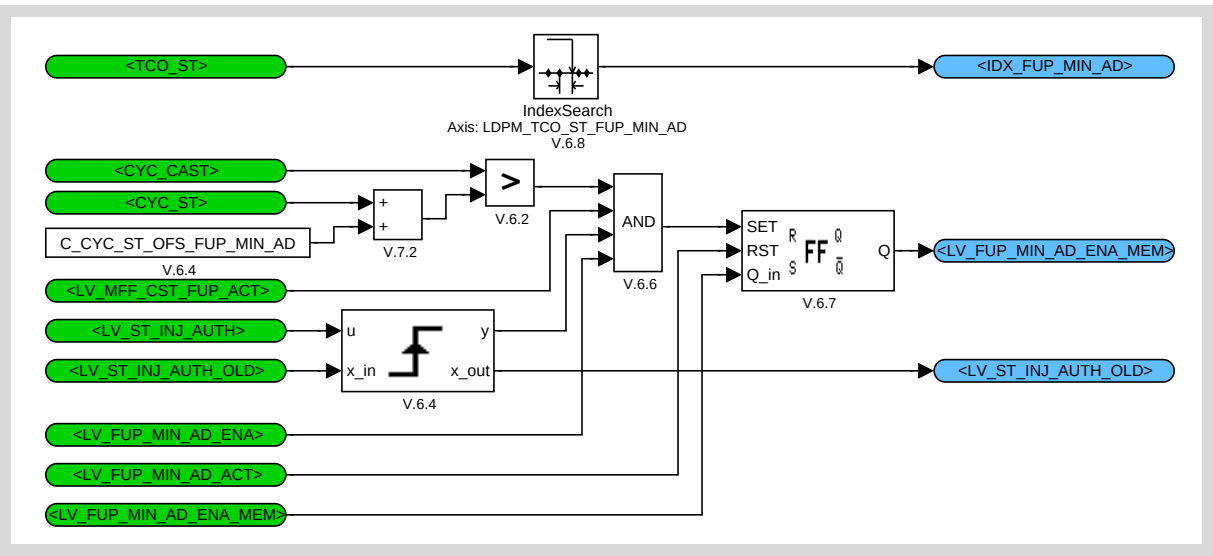

Figure 43.7.8:

Copyright ©Continental AG. Transmittal, reproduction, dissemination and/or editing of this document as well as utilisation of its contents and communication thereof to others without expressed authorisation are prohibited. Offenders will be held liable for payment of damages. All rights created by patent grant or registration of a utility model or design patent are reserved.

43.7.2.2.1.3 Enabled and disabled fuel pressure minimum adaptation

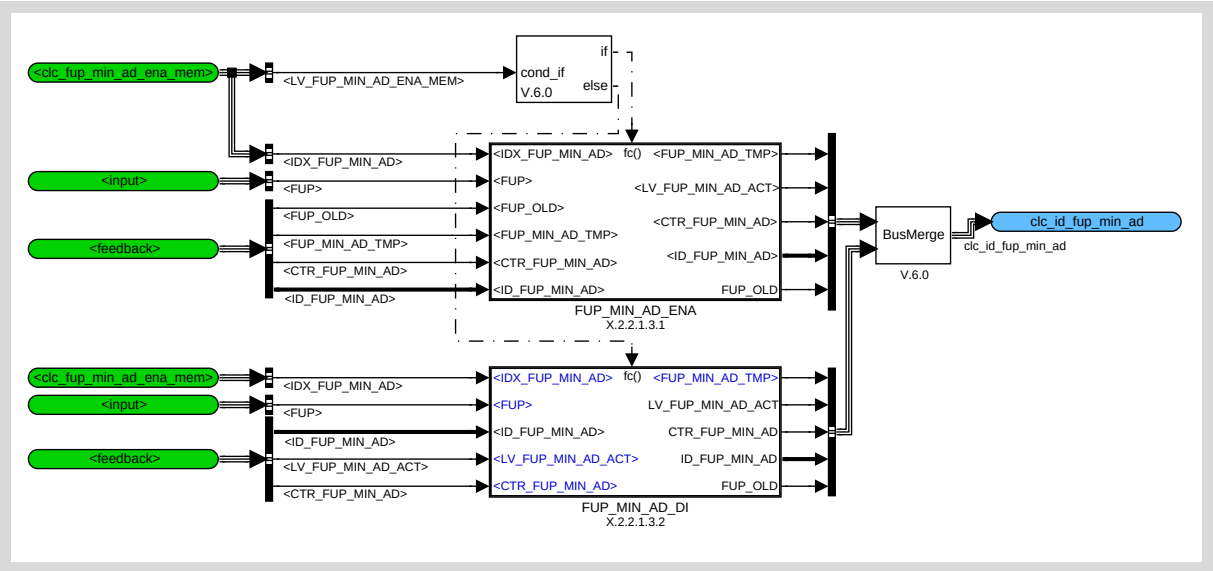

Figure 43.7.9:

43.7.2.2.1.3.1 Enabled fuel pressure minimum adaptation

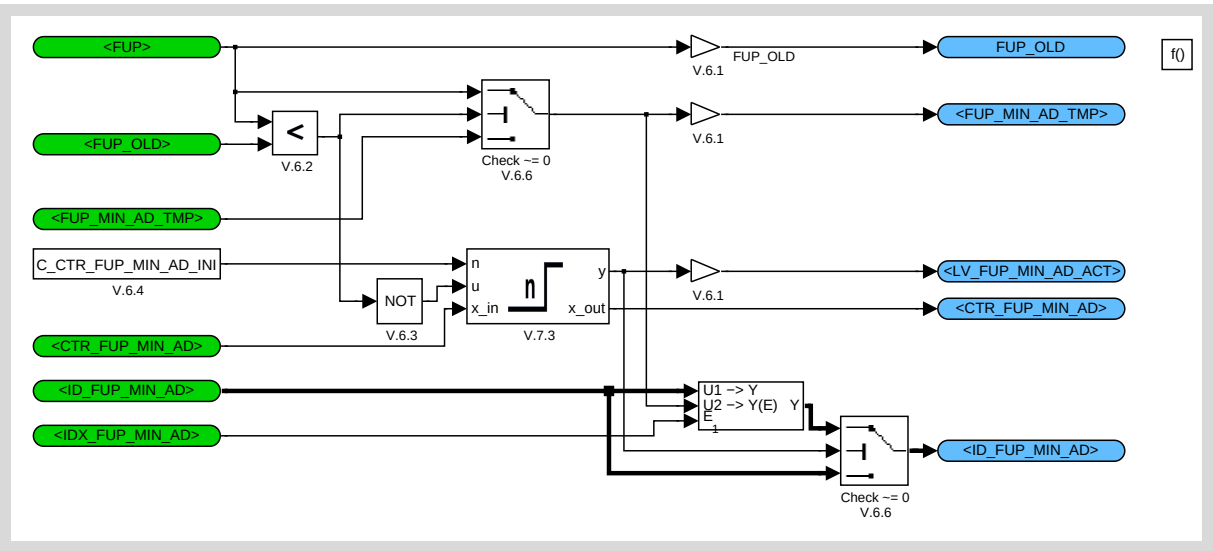

Figure 43.7.10:

Copyright ©Continental AG. Transmittal, reproduction, dissemination and/or editing of this document as well as utilisation of its contents and communication thereof to others without expressed authorisation are prohibited. Offenders will be held liable for payment of damages. All rights created by patent grant or registration of a utility model or design patent are reserved.

43.7.2.2.1.3.2 Disabled fuel pressuer minimum adaptation

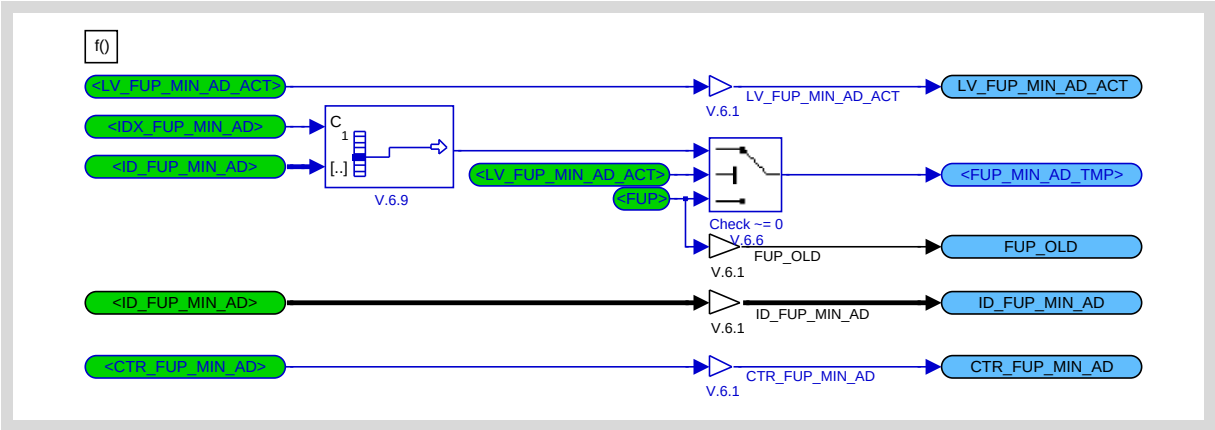

Figure 43.7.11:

43.7.2.3 Calculation sequence

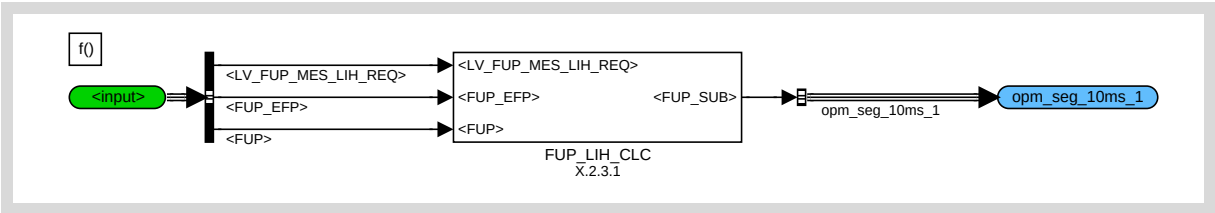

Figure 43.7.12:

43.7.2.3.1 Calculation of FUP_SUB

The substitute (limp home) value of the fuel pressure is, in case of an error, the value of the low fuel pressure sensor, due to limp home strategy for the high pressure pump.

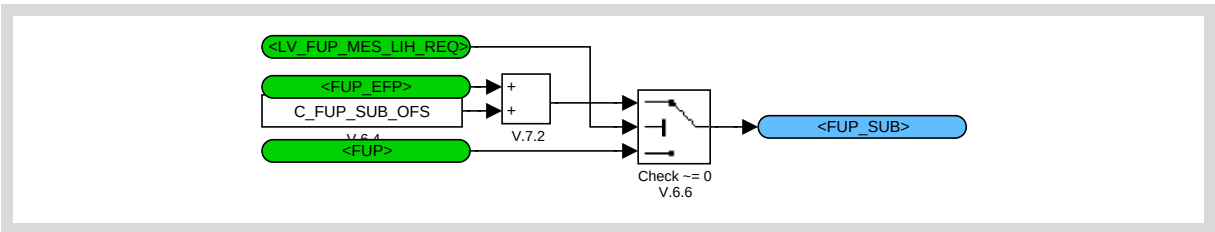

Figure 43.7.13:

Copyright ©Continental AG. Transmittal, reproduction, dissemination and/or editing of this document as well as utilisation of its contents and communication thereof to others without expressed authorisation are prohibited. Offenders will be held liable for payment of damages. All rights created by patent grant or registration of a utility model or design patent are reserved.

43.7.2.4 Calculation sequence

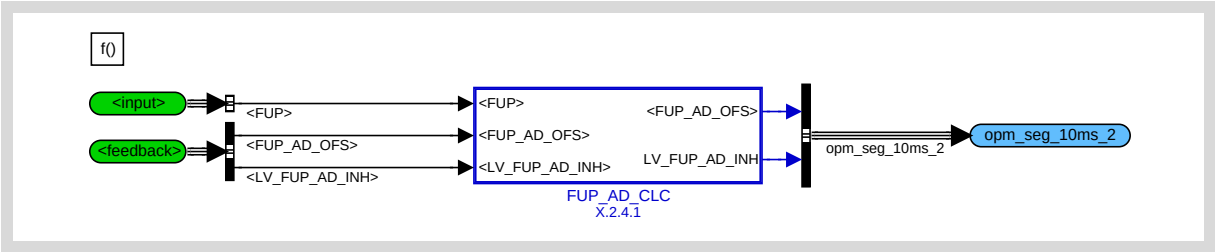

Figure 43.7.14:

43.7.2.4.1 Calculation of fuel pressure offset adaptation

After reaching a certain fuel pressure value, the memorised adaptation value will be removed with a gradient limitation towards zero, with a defined constant value.

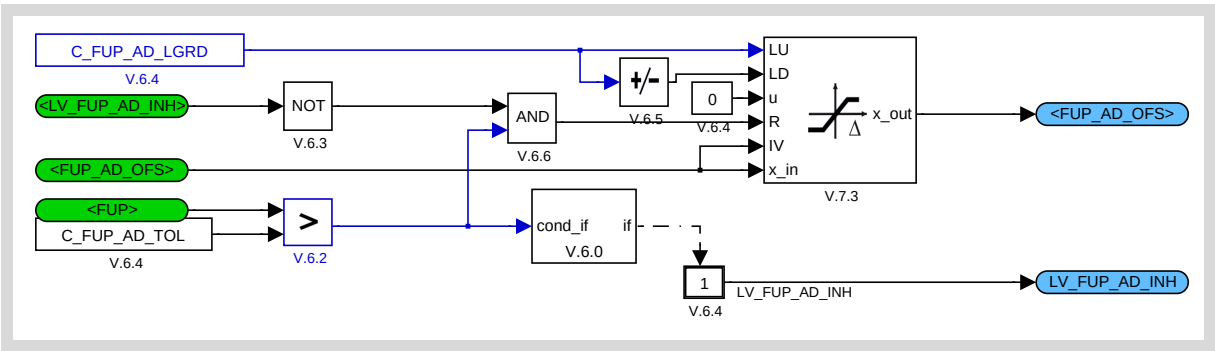

Figure 43.7.15:

Copyright ©Continental AG. Transmittal, reproduction, dissemination and/or editing of this document as well as utilisation of its contents and communication thereof to others without expressed authorisation are prohibited. Offenders will be held liable for payment of damages. All rights created by patent grant or registration of a utility model or design patent are reserved.

43.8 Fuel pressure of low pressure pump

▶ Data Definition

Name	Mode	Coded Limits	Display Limits	Resolution	Unit
CTR_VP_FUP_EFP_MES [2]	V	0... FFFFH	0... 65535	1	-
Sample counter for averaging of fuel low pressure sensor raw signal					
FUP_EFP	O/V	0... FFFFH	0... 173888	2.6533608	hPa
Fuel pressure EFP					
FUP_EFP_MES	O/V	0... FFFFH	0... 173888	2.6533608	hPa
Measured Fuel pressure value in the feedline					
FUP_EFP_MMV	V	0... FFFFH	0... 173888	2.6533608	hPa
Mean fuel pressure value in the feedline					
LV_FUP_EFP_MES_SEG	V	0... 1H	0 ...1	1	-
Logical variable selecting active pair of buffers for acquisition of low pressure sensor voltage samples					
VP_FUP_EFP_MES	O/V	0... 7FFFH	0... 4.999847412109	152.588e-6	V
Averaged signal voltage of fuel low pressure sensor					
VP_FUP_EFP_MES_SUM [2]	V	0... FFFFFFFFH	0... 655.35999985e3	152.588e-6	V
Accumulated signal voltage of fuel low pressure sensor					

▶ Input Data

LV_FUP_EFP_MES_LIH_REQ {p. 12184}			

▶ Calibration Data

Name	Mode	Coded Limits	Display Limits	Resolution	Unit
C_FUP_EFP_LIH	-	0... FFFFH	0... 173888	2.6533608	hPa
Limp home value for fuel pressure of low pressure circuit (opening pressure of safety valve)					
C_FUP_EFP_MES_CRLC	-	0... FFH	0... 0.99609375	0.00390625	-
Correlation constant for fuel pressure filter for the low pressure pump					
IP_FUP_EFP	-	0... FFFFH	0... 173888	2.6533608	hPa
LDP_V_FUP_EFP_IP_FUP_EFP	3	0... 7FFFH	0... 4.999847412109	152.588e-6	V
Fuel pressure sensor linearisation table					

▶ Import actions:

ACTION_INFR_GetVFupEfpSens(**OUT** <PRM_VP_FUP_EFP>)

▶ General Information

Within this module the raw signal voltage of low pressure sensor is acquired, averaged, converted and filtered.

Copyright ©Continental AG. Transmittal, reproduction, dissemination and/or editing of this document as well as utilisation of its contents and communication thereof to others without expressed authorisation are prohibited. Offenders will be held liable for payment of damages. All rights created by patent grant or registration of a utility model or design patent are reserved.

Processed pressure value is provided as main module output.
Raw sensor voltage is provided by Import Action 'ACTION_INFR_GetVFupEfpSens'. Two alternating pairs of buffers are used for synchronization of signal acquisition at 1ms recurrence, and signal processing at 10 ms recurrence (LV_ST_END = 0) / segment recurrence (LV_ST_END = 1), respectively. Thus read/write inconsistencies due to asynchronous task execution are prevented.

▶ **Signal flow diagram:**

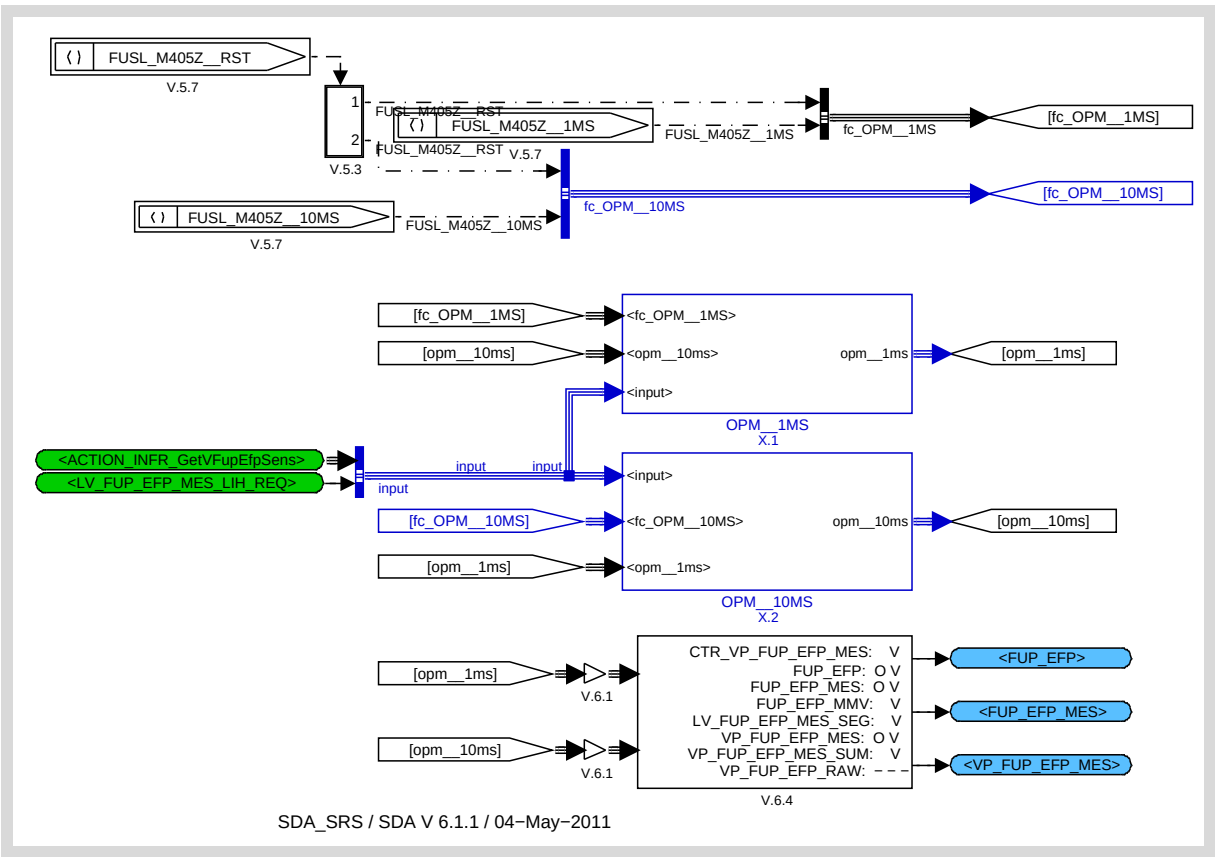

Figure 43.8.1:

43.8.1 Signal acquisition

▶ **General Information**

Sensor voltage is sampled at 1 ms recurrence and accumulated. In parallel number of acquired samples is counted in order to allow for signal averaging over variable segment times.

▶ **Application Conditions**

Initialisation:	RST
Activation:	1
Deactivation:	0
Recurrence:	1MS

▶ **Function Description**

Copyright ©Continental AG. Transmittal, reproduction, dissemination and/or editing of this document as well as utilisation of its contents and communication thereof to others without expressed authorisation are prohibited. Offenders will be held liable for payment of damages. All rights created by patent grant or registration of a utility model or design patent are reserved.

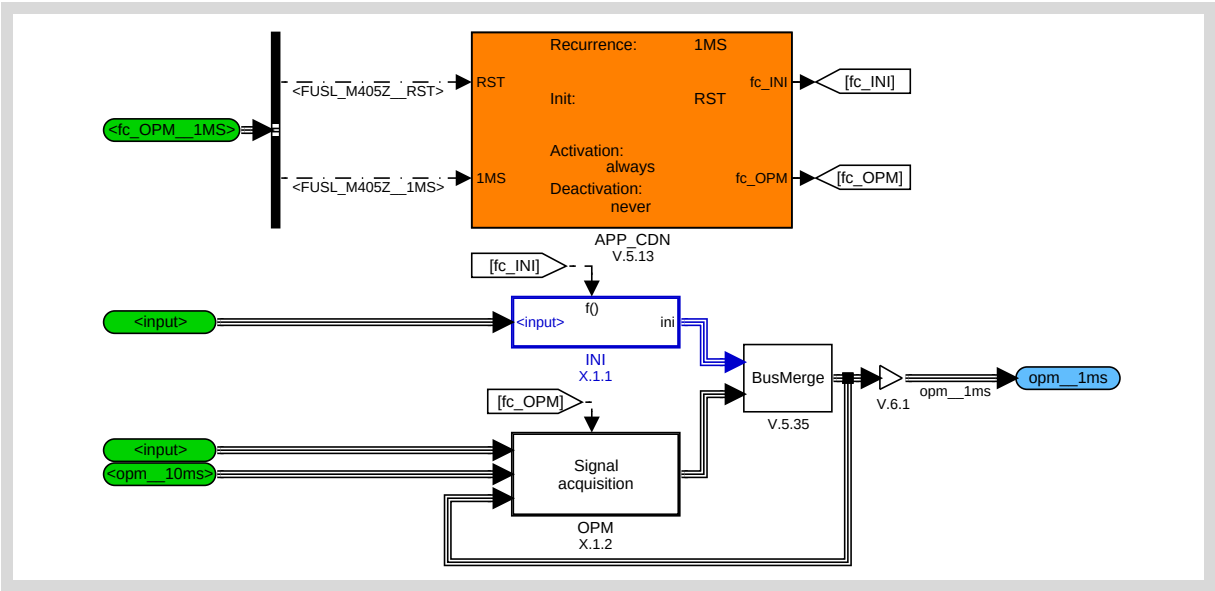

Figure 43.8.2:

43.8.1.1 Initialization

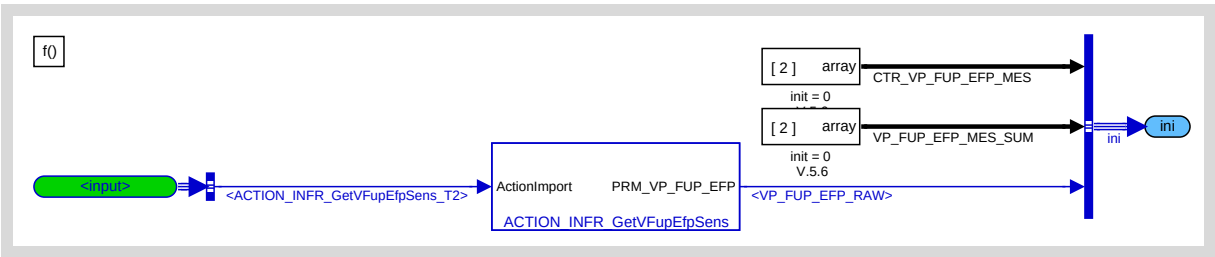

Figure 43.8.3:

43.8.1.2 Signal buffering

Raw voltage of sensor is accumulated for each 10 ms / segment recurrence at 1 ms sample rate. Number of considered samples is counted accordingly in active buffer selected by LV_FUP_EFP_MES_SEG.

Copyright ©Continental AG. Transmittal, reproduction, dissemination and/or editing of this document as well as utilisation of its contents and communication thereof to others without expressed authorisation are prohibited. Offenders will be held liable for payment of damages. All rights created by patent grant or registration of a utility model or design patent are reserved.

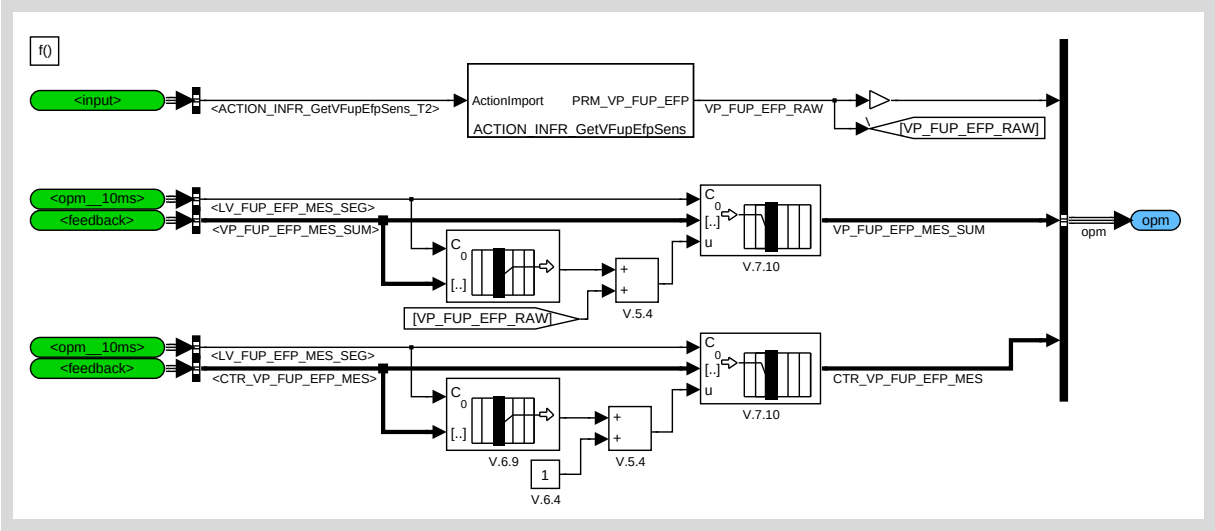

Figure 43.8.4:

43.8.2 No title given

▶ General Information

▶ Application Conditions

Initialisation:	RST
Activation:	1
Deactivation:	0
Recurrence:	10MS

▶ Function Description

Copyright ©Continental AG. Transmittal, reproduction, dissemination and/or editing of this document as well as utilisation of its contents and communication thereof to others without expressed authorisation are prohibited. Offenders will be held liable for payment of damages. All rights created by patent grant or registration of a utility model or design patent are reserved.

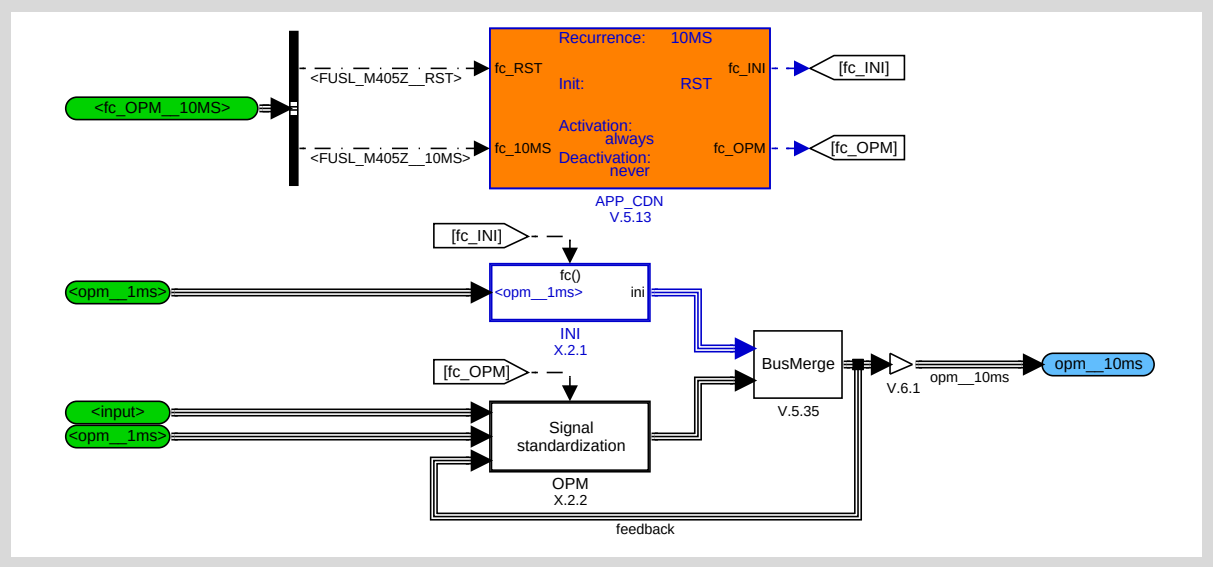

Figure 43.8.5:

43.8.2.1 No title given

43.8.2.2 No title given

43.8.2.2.1 No title given

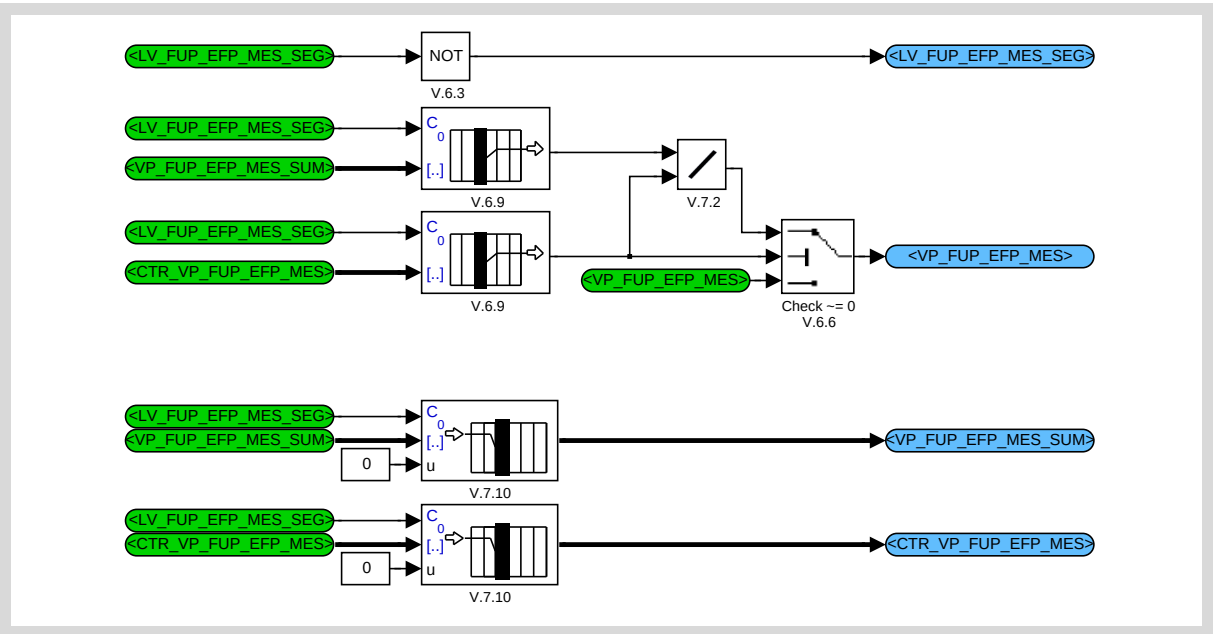

Figure 43.8.6:

Copyright ©Continental AG. Transmittal, reproduction, dissemination and/or editing of this document as well as utilisation of its contents and communication thereof to others without expressed authorisation are prohibited. Offenders will be held liable for payment of damages. All rights created by patent grant or registration of a utility model or design patent are reserved.

43.8.2.2.2 No title given

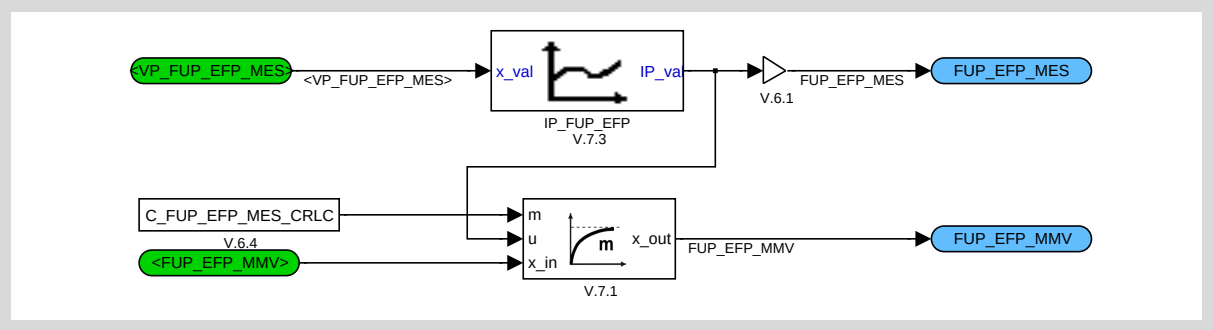

Figure 43.8.7:

43.8.2.2.3 No title given

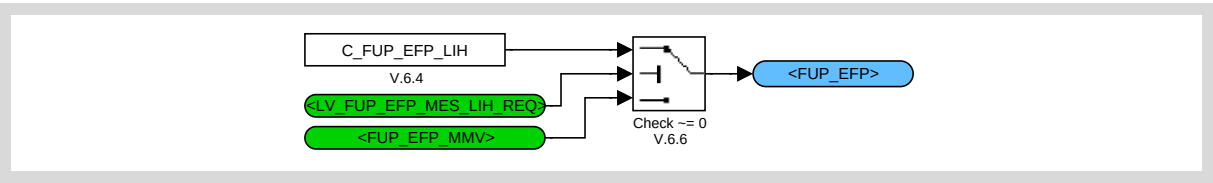

Figure 43.8.8:

Copyright ©Continental AG. Transmittal, reproduction, dissemination and/or editing of this document as well as utilisation of its contents and communication thereof to others without expressed authorisation are prohibited. Offenders will be held liable for payment of damages. All rights created by patent grant or registration of a utility model or design patent are reserved.

43.9 Fuel pressure setpoint of low pressure pump

Data Definition

Name	Mode	Coded Limits	Display Limits	Resolution	Unit
B_fapbksol	V	0... 1H	0 ...1	1	-
Bed. Filter für pbksoll in %BKS angefordert					
B_kfntbks	O/V	0... 1H	0 ...1	1	-
Bedingung Kennfeld Solldruck in Abhängigkeit der HDP-Temperatur und der Drehzahl wird genutzt					
B_ktaabks	O/V	0... 1H	0 ...1	1	-
Bedingung "ueber Tester wurde schnelle Adaption angefordert"					
kfflafinf_w	O/V	0... FFFFH	0... 15.624761581e3	0.23841858	g/min
gefilterte Kraftstoffmenge					
pbksoll_w	O/V	0... FFFFH	0... 6553.5	0.1	kPa
Sollwert für Kraftstoffniederdruck					
pbksollmx_w	V	0... FFFFH	0... 6553.5	0.1	kPa
Maximum limit for pbksoll_w					
pbksprof_w	V	0... FFFFH	0... 6553.5	0.1	kPa
Offset auf pbksoll_w falls zu große HDR-Abweichung erkannt wurde					
pbkszw_w	V	0... FFFFH	0... 6553.5	0.1	kPa
pbksoll Zwischenwert vor Niederdruck-Filterung					
psrohbks_w	V	0... FFFFH	0... 6553.5	0.1	kPa
Kraftstoffsolldruck roh					
psstbks_w	V	0... FFFFH	0... 6553.5	0.1	kPa
Solldruck im Start und in der Nachstartphase					

Input Data

B_ebks {p. 12094}	B_fa {p. 11943}	B_fabks {p. 11943}	B_hst {p. 11943}
B_kl15 {p. 11943}	B_pbksprof {p. 12095}	B_sshev {p. 12095}	kfflafin_w {p. 12097}
nmot_w {p. 11944}	pu_w {p. 11945}	tfuelmx {p. 11845}	tmot {p. 11945}
tmst {p. 11945}	tnse_w {p. 11945}	tnsez_w {p. 11945}	

Calibration Data

Name	Mode	Coded Limits	Display Limits	Resolution	Unit
CWBKS	V	0... FFH	0... 255	1	-
Codewort für BKS					
CWBKS3	V	0... FFH	0... 255	1	-
Codewort 3 für BKS					
CWBKS4	V	0... FFH	0... 255	1	-
Codewort 4 für BKS					
DPBKSOLFD	V	0... FFFFH	0... 6553.5	0.1	kPa
Schwelle für Sollwertabweichung des Niederdrucks zur Deaktivierung des Filters pbksoll_w_LT					

Copyright ©Continental AG. Transmittal, reproduction, dissemination and/or editing of this document as well as utilisation of its contents and communication thereof to others without expressed authorisation are prohibited. Offenders will be held liable for payment of damages. All rights created by patent grant or registration of a utility model or design patent are reserved.

Name	Mode	Coded Limits	Display Limits	Resolution	Unit
KFNTBKS	V	0... FFFFH	0... 6553.5	0.1	kPa
LDP_KFNTBKS_x	10	0... FFH	-48... 143.25	0.75	°C
LDP_KFNTBKS_y	8	0... FFFFH	0... 16383.75	0.25	1/min
Solldruck in Abhängigkeit der HDP- Temperatur und der Drehzahl					
KFPSNS	V	0... FFFFH	0... 3.999938964844	61.0352e-6	-
LDP_KFPSNS_x	8	0... FFH	-48... 143.25	0.75	°C
LDP_KFPSNS_y	8	0... FFFFH	0... 6553.5	0.1	s
Kennfeld für Korrekturfaktor zur Solldruckbestimmung im Start und in der Nachstartphase					
KLKFPSS	V	0... FFFFH	0... 6553.5	0.1	kPa
LDP_KLKFPSS_x	5	0... FFH	-48... 143.25	0.75	°C
Kennlinie Solldruck im Start, nur abh. von Motorstarttemperatur					
KLPSKRMX	V	0... FFFFH	0... 6553.5	0.1	kPa
LDP_KLPSKRMX_x	6	0... FFFFH	0... 15.624761581e3	0.23841858	g/min
Kennlinie zur Bestimmung des maximalen Solldruckwertes in Abh. der gefilterten Einspritzmenge					
PBKSDBGVMX	V	0... FFFFH	0... 6553.5	0.1	kPa
maximaler Druck des DBV					
PBKSDBMXOF	V	0... FFFFH	0... 6553.5	0.1	kPa
Offset auf Maximaldruck für Einstellung Sicherheitsabstand zur DBV-Druckgrenze					
PBKSPROF	V	0... FFFFH	0... 6553.5	0.1	kPa
Initwert für Druckoffset bei Hochdruckreglerdynamik					
PSBKSFA	V	0... FFFFH	0... 6553.5	0.1	kPa
Solldruckvorgabe für schnelle Adaption bei Kurztripanforderung					
PSKBKS	V	0... FFFFH	0... 6553.5	0.1	kPa
Kraftstoffsolldruck konstante Vorgabe					
PSKRMN	V	0... FFFFH	0... 6553.5	0.1	kPa
Solldruck Kraftstoff minimal					
PSKRMX	V	0... FFFFH	0... 6553.5	0.1	kPa
Solldruck Kraftstoff maximal					
PSNHSLL	V	0... FFFFH	0... 6553.5	0.1	kPa
Solldruck bei Heissstart oder LL-Phase					
ZBKSOLL	V	1... FFFFH	0.1... 6553.5	0.1	s
Filterzeitkonstante für pbksoll_w_LT					
ZKFFLAFF	V	1... FFFFH	0.1... 6553.5	0.1	s
Filterzeitkonst. für kfflafinf_w_LT					
ZPBKSOF	V	1... FFFFH	0.1... 6553.5	0.1	s
Integrationskonstante für Runterrampen des Fehler-Niederdruck-Wertes PBKSPROF sobald Hochdruckreglerdynamik zurückgenommen					

▶ General Information

▶ Application Conditions

Initialisation: `RST or IGKON`

Activation: `always`

Copyright©Continental AG. Transmittal, reproduction, dissemination and/or editing of this document as well as utilisation of its contents and communication thereof to others without expressed authorisation are prohibited. Offenders will be held liable for payment of damages. All rights created by patent grant or registration of a utility model or design patent are reserved.

Deactivation: `never`

Recurrence: `100MS`

Function Description

Path: FUSL_M906A

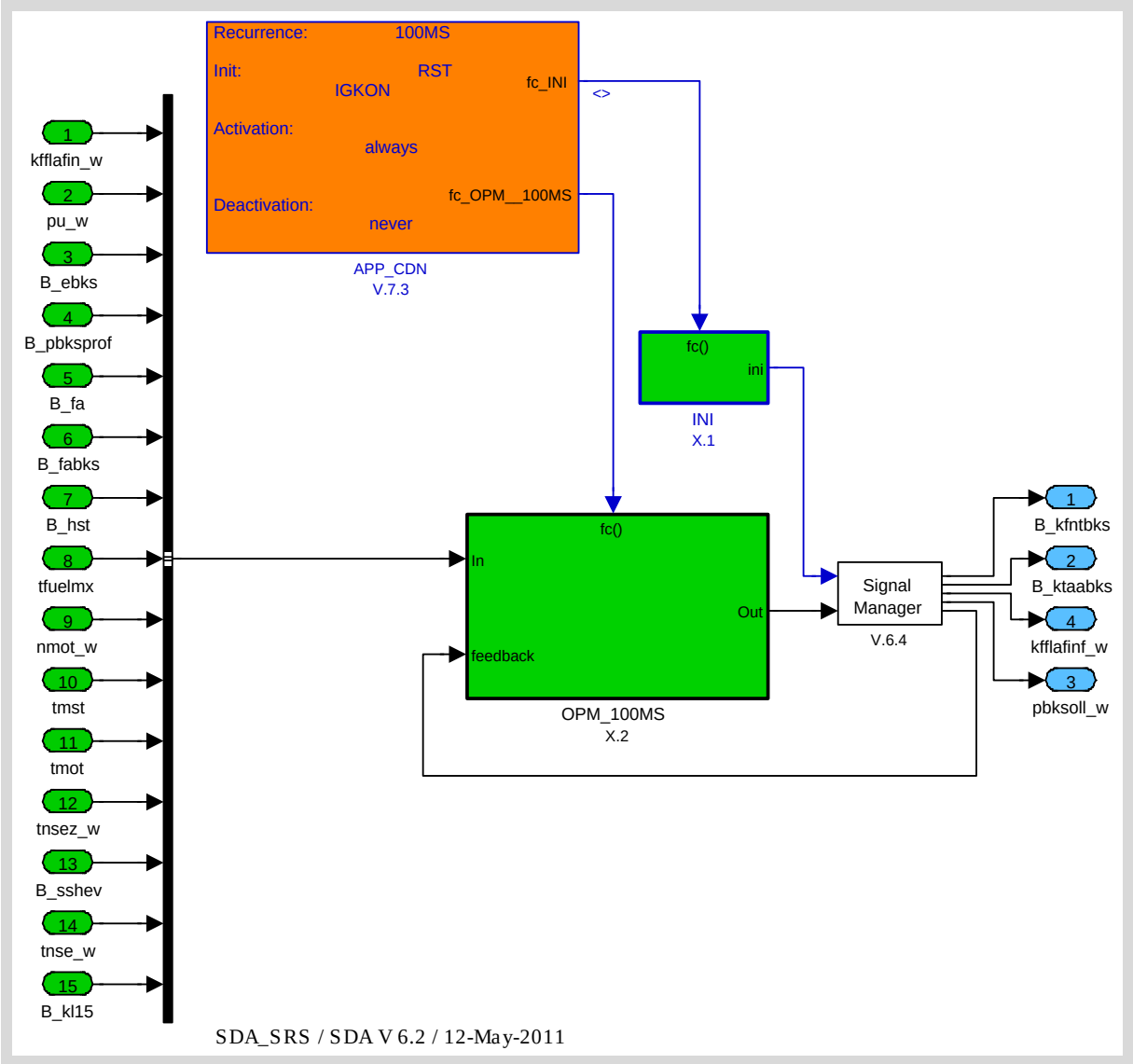

Figure 43.9.1:

Figure 1:

Copyright ©Continental AG. Transmittal, reproduction, dissemination and/or editing of this document as well as utilisation of its contents and communication thereof to others without expressed authorisation are prohibited. Offenders will be held liable for payment of damages. All rights created by patent grant or registration of a utility model or design patent are reserved.

43.9.1 Initialization

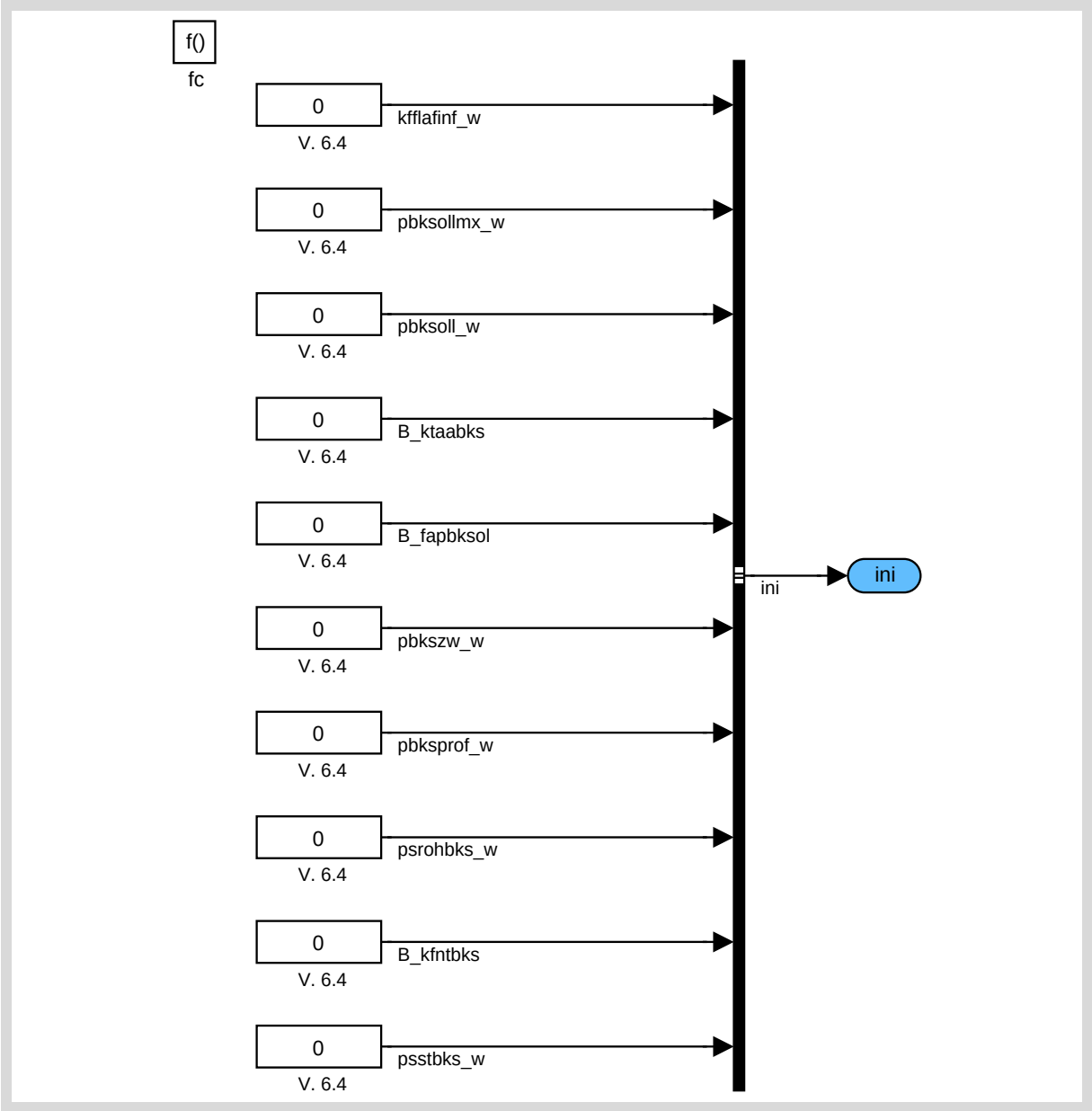

Figure 43.9.2:

Path: FUSL_M906A/INI

43.9.2 OPM_100MS

Copyright ©Continental AG. Transmittal, reproduction, dissemination and/or editing of this document as well as utilisation of its contents and communication thereof to others without expressed authorisation are prohibited. Offenders will be held liable for payment of damages. All rights created by patent grant or registration of a utility model or design patent are reserved.

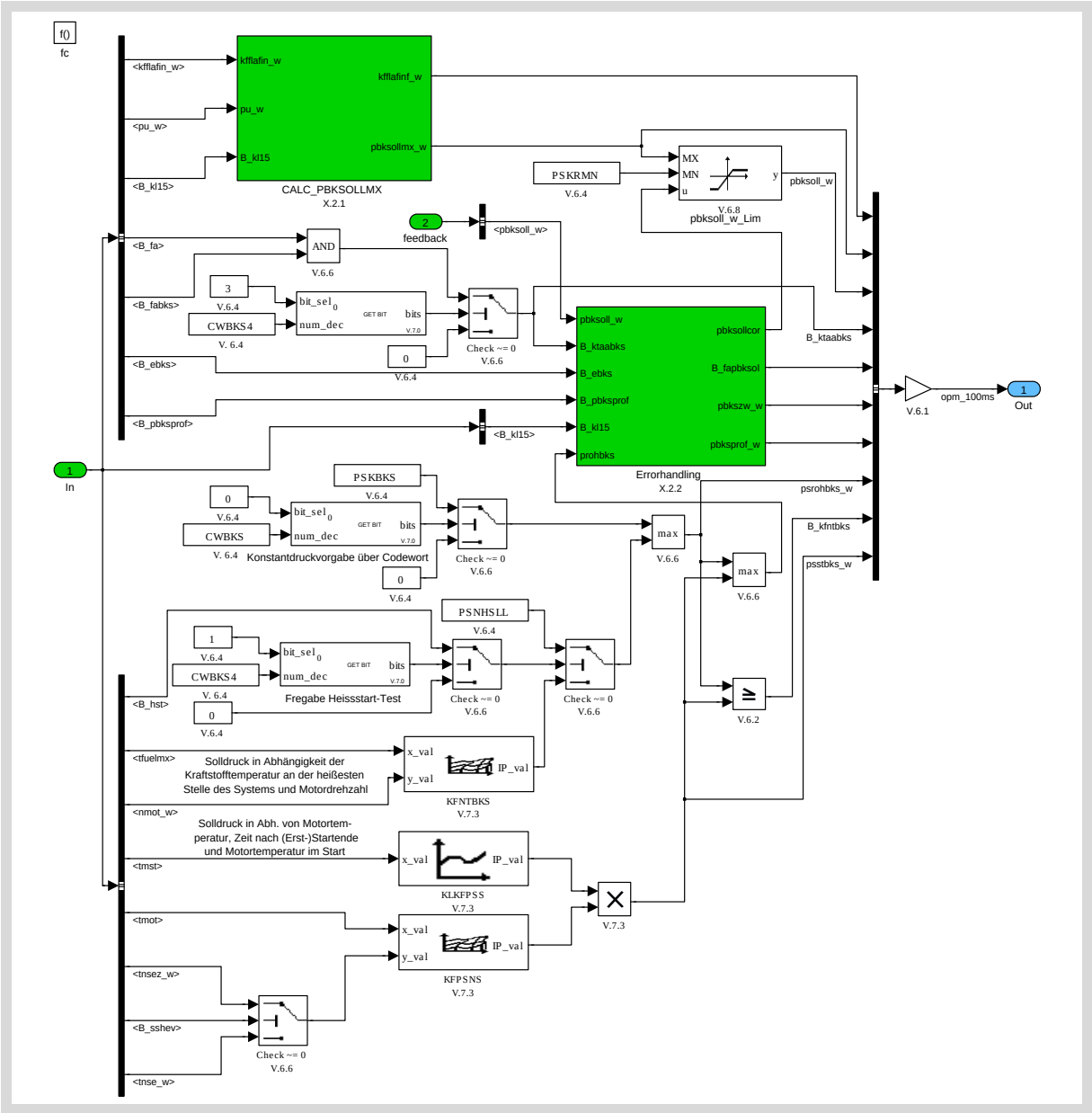

Figure 43.9.3:

Path: FUSL_M906A/OPM_100MS

Copyright ©Continental AG. Transmittal, reproduction, dissemination and/or editing of this document as well as utilisation of its contents and communication thereof to others without expressed authorisation are prohibited. Offenders will be held liable for payment of damages. All rights created by patent grant or registration of a utility model or design patent are reserved.

43.9.2.1 CALC_PBKSOLLMX

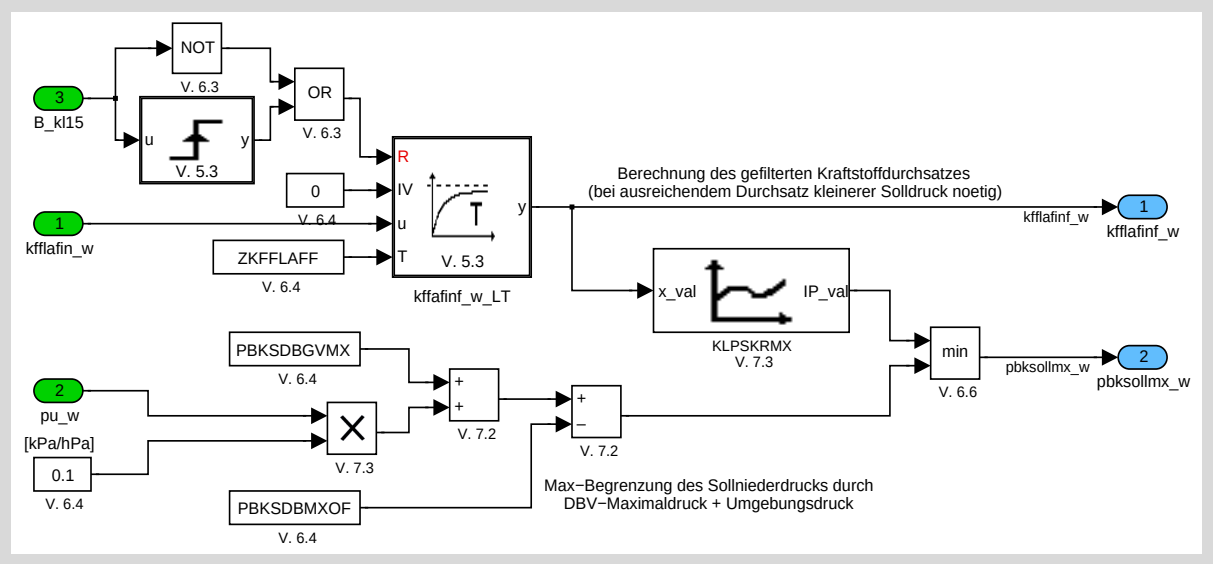

Figure 43.9.4:

Path: FUSL_M906A/OPM_100MS/CALC_PBKSOLLMX

Copyright ©Continental AG. Transmittal, reproduction, dissemination and/or editing of this document as well as utilisation of its contents and communication thereof to others without expressed authorisation are prohibited. Offenders will be held liable for payment of damages. All rights created by patent grant or registration of a utility model or design patent are reserved.

43.9.2.2 Errorhandling

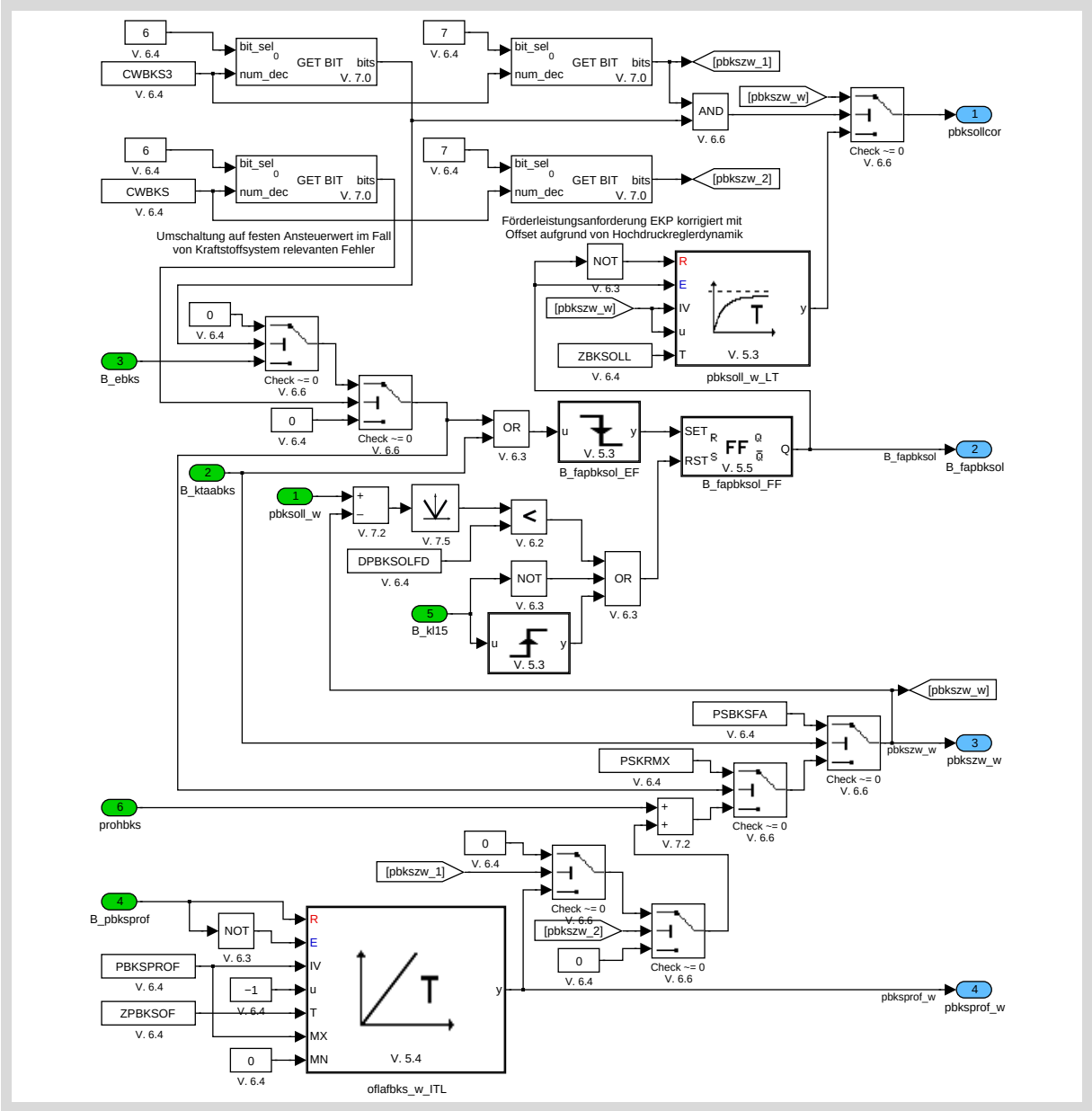

Figure 43.9.5:

Path: FUSL_M906A/OPM_100MS/Errorhandling

Copyright ©Continental AG. Transmittal, reproduction, dissemination and/or editing of this document as well as utilisation of its contents and communication thereof to others without expressed authorisation are prohibited. Offenders will be held liable for payment of damages. All rights created by patent grant or registration of a utility model or design patent are reserved.

43.10 Fuel pump low pressure control

▶ Data Definition

Name	Mode	Coded Limits	Display Limits	Resolution	Unit
B_aabks	O/V	0... 1H	0 ...1	1	-
Bedingung Adaption abgeschlossen (PI-Adaption)					
B_adbks	O/V	0... 1H	0 ...1	1	-
Bedingung Adaption freigegeben (PI-Adaption)					
B_adpfbks	V	0... 1H	0 ...1	1	-
Bed. Adaption hat seit letztem Powerfail mindestens einmal stattgefunden					
B_bksacwe	V	0... 1H	0 ...1	1	-
Bed. Adaption BKS über Codewort freigegeben					
B_bkserr	V	0... 1H	0 ...1	1	-
Bedingung Fehler liegt an für Fehlerspeicher loeschen					
B_dbewbks	V	0... 1H	0 ...1	1	-
Bed. Dampfblasen erkannt während Wobbeln BKS					
B_dmkrhst	V	0... 1H	0 ...1	1	-
Bed. dmkrhdev stationär					
B_dmkrwb	V	0... 1H	0 ...1	1	-
Bed. Durchflussmenge im zulässigen Wertebereich für Wobbelfreigabe					
B_ffwobres	V	0... 1H	0 ...1	1	-
Bed. FlipFlop für Auswertung Wobbeln resetieren					
B_irgfrbks	O/V	0... 1H	0 ...1	1	-
Bedingung I-Anteilberechnung in PI-Adaption freigegeben					
B_ladbksm	V	0... 1H	0 ...1	1	-
Bed. Freigabe adaption BKS Motortemperatur erreicht					
B_nfwobbks	V	0... 1H	0 ...1	1	-
Bed. negative Flanke Wobbeln BKS					
B_pbkswb	V	0... 1H	0 ...1	1	-
Bedingung Niederdruck im zulaessigen Bereich fuer Wobbeln					
B_regfrbks	V	0... 1H	0 ...1	1	-
Bedingung kein Fehler von NDS und EKP in Betrieb					
B_regwindup	V	0... 1H	0 ...1	1	-
Bedingung I-Anteil einfrieren weil Reglergrenzen erreicht					
B_spwfbks	V	0... 1H	0 ...1	1	-
Bed. keine Saugstrahlpumpenanforderung; Wobbelfreigabe erteilt					
B_wbkse	O/V	0... 1H	0 ...1	1	-
Bedingung Wobbeln freigegeben					
B_wbksez	V	0... 1H	0 ...1	1	-
Bed. Wobbeln BKS freigegeben weil die Zeitgrenze seit letztem Wobbelereignis überschritten ist					
B_wobokvd	V	0... 1H	0 ...1	1	-
Bed. Wobbeln bei letztem Zyklus vollständig durchgelaufen					
B_wobze	O/V	0... 1H	0 ...1	1	-
Bed. "in diesem Zyklus wurde mindestens einmal vollständig pbksadw gelernt"					
B_zadbks	O/V	0... 1H	0 ...1	1	-
Zyklusflag für PI-Adaption					
dmkrhdef_w	O/V	0... FFFFH	0... 15.624761581e3	0.23841858	g/min

Copyright ©Continental AG. Transmittal, reproduction, dissemination and/or editing of this document as well as utilisation of its contents and communication thereof to others without expressed authorisation are prohibited. Offenders will be held liable for payment of damages. All rights created by patent grant or registration of a utility model or design patent are reserved.

Name	Mode	Coded Limits	Display Limits	Resolution	Unit
gefilterterter Betrag von dmkrhdev BKS					
dpbksoll_w	V	0... FFFFH	0... 6553.5	0.1	kPa
delta flaf aus Wobbeln in BKS					
LV_CLR_FMY_BKS_ACT	V	0... 1H	0 ...1	1	-
Clear failure memory active for BKS					
pbksadg_w	O/V	8000... 7FFFH	-3276.8... 3.2767e3	0.1	kPa
Adaptionswert für BKS gewichtet mit pbksoll_w					
pbksadr_w	O/V/S	8000... 7FFFH	-3276.8... 3.2767e3	0.1	kPa
Adaptionswert der PI-Adaption im NICHT-FLÜCHTIGEN Speicher					
pbksadw_w	O/V	8000... 7FFFH	-3276.8... 3.2767e3	0.1	kPa
Adaptionswert EKP aus Wobbeln					
pbksadwa_w	O/V/S	8000... 7FFFH	-3276.8... 3.2767e3	0.1	kPa
Adaptionswert aus Wobbeln im NICHT-FLÜCHTIGEN Speicher					
pbksaw_w	O/V	8000... 7FFFH	-3276.8... 3.2767e3	0.1	kPa
Adaptionswert, selektiert nach verwendetem Verfahren (Regler: pbksadr_w, Wobbeln: pbksadwa_w)					
pbksda_w	V	8000FFFD... 7FFF0001H	-13.10680002e3 ...13.106800006e3	6.10352e-6	kPa
D-Anteil des PID-Reglers in PI-Adaption					
pbksdiff_w	O/V	8000... 7FFFH	-3276.8... 3.2767e3	0.1	kPa
Niederdruckdifferenz pbksoll_w - pbkist_w					
pbksdio_w	V	8000... 7FFFH	-3276.8... 3.2767e3	0.1	kPa
pbksdiff_w-Wert aus Vorraster für Berechnung D-Anteil bei PI-Regler-Adaption					
pbksdr_w	V	8000... 7FFFH	-3276.8... 3.2767e3	0.1	kPa
Reglerantwort bei PI-Regler-Adaption					
pbksia_w	O/V	8000... 7FFFH	-3276.8... 3.2767e3	0.1	kPa
I-Anteil des PI-Reglers (PI-Adaption)					
pbksiad_w	V	8000... 7FFFH	-3276.8... 3.2767e3	0.1	kPa
I-Anteil Veränderung					
pbksiao_w	V	8000... 7FFFH	-3276.8... 3.2767e3	0.1	kPa
I-Anteil Wert aus Vorraster gefiltert					
pbksollmod_w	O/V	0... FFFFH	0... 6553.5	0.1	kPa
modifizierter Sollwert für Niederdruck (abh. von Adaptionsverfahren: Regler: pbksoll_w+Reglerantwort, Wobbeln: pbksoll_w+Wobbelamplitude bei Wobbelvorgang)					
pbkspa_w	V	8000FFFD... 7FFF0001H	-13.10680002e3 ...13.106800006e3	6.10352e-6	kPa
P-Anteil des PID-Reglers in PI-Adaption					
twobpos_w	V	0... FFFFH	0... 1310.7	0.02	s
Zeitpunkt im Periodenspiel Wobbeln BKS					
vrhdrf_w	O/V	8000... 7FFFH	-327.68 ...327.67	0.01	mm3
vrhdr gefiltert					
zaabks_w	V	0... FFFFH	0... 6553.5	0.1	s
Zeit seit Anforderung PI-Adaption					

Copyright ©Continental AG. Transmittal, reproduction, dissemination and/or editing of this document as well as utilisation of its contents and communication thereof to others without expressed authorisation are prohibited. Offenders will be held liable for payment of damages. All rights created by patent grant or registration of a utility model or design patent are reserved.

Input Data

ADBKSINI {p. 12098}	B_bksspa {p. 12094}	B_clbks {p. 11943}	B_dhbks {p. 12094}
B_ebks {p. 12094}	B_efahr {p. 12094}	B_ekponbks {p. 12094}	B_erdbksy {p. 12095}
B_flafobks {p. 12095}	B_frdbks {p. 11943}	B_fstcanok {p. 11943}	B_getankt {p. 11844}
B_hrdynaw {p. 12095}	B_kfntbks {p. 11911}	B_kl15 {p. 11943}	B_ktaabks {p. 11911}
B_kuppl {p. 11943}	B_mpi {p. 11943}	B_nmot {p. 11943}	B_pbksprof {p. 12095}
B_sa {p. 11943}	B_stend {p. 11944}	B_switchbks {p. 12095}	B_tfstausw {p. 11844}
B_tfstok {p. 11944}	B_tmbkser {p. 11844}	CWBKS {p. 12098}	CWBKS2 {p. 12098}
CWBKS3 {p. 12098}	CWBKS4 {p. 12098}	CWBKS5 {p. 12098}	CWBKSMPI {p. 12098}
dmkrhdev_w {p. 11944}	E_ebks {p. 11944}	E_edbks {p. 11944}	E_erdbksy {p. 11944}
lepwmbks_w {p. 12097}	nmot_w {p. 11944}	pbkist_w {p. 11944}	pbksoll_w {p. 11911}
PBKSSP {p. 12100}	tmot {p. 11945}	tnse_w {p. 11945}	vfzg_w {p. 11945}
vgeshdp_w {p. 11945}	vrhdr_w {p. 11946}		

Calibration Data

Name	Mode	Coded Limits	Display Limits	Resolution	Unit
ADWMN	V	8000... 7FFFH	-3276.8... 3.2767e3	0.1	kPa
untere Grenze für Adaptionswert bedarfsgesteuertes Kraftstoffsystem					
ADWMX	V	8000... 7FFFH	-3276.8... 3.2767e3	0.1	kPa
obere Grenze für Adaptionswert bedarfsgesteuertes Kraftstoffsystem					
AMPLWOB	V	0... FFFFH	0... 6553.5	0.1	kPa
Amplitude der aufgeprägten Schwingung bedarfsgesteuertes Kraftstoffsystem					
DMKRWBMN	V	0... FFFFH	0... 15.624761581e3	0.23841858	g/min
Kraftstoffördermenge unterer Grenzwert für Lernfreigabe bedarfsgesteuertes Kraftstoffsystem					
DMKRWBMX	V	0... FFFFH	0... 15.624761581e3	0.23841858	g/min
Kraftstoffördermenge oberer Grenzwert für Lernfreigabe bedarfsgesteuertes Kraftstoffsystem					
DPADBKSAW	V	8000... 7FFFH	-3276.8... 3.2767e3	0.1	kPa
Delta Adaptionswert EKP wenn außerhalb Wobbeln Dampfblasen entstehen					
DPADBKSIO	V	8000... 7FFFH	-3276.8... 3.2767e3	0.1	kPa
Delta Adaptionswert wenn durchs wobbeln keine Dampfblasen entstanden sind					
DPBKSADW	V	8000... 7FFFH	-3276.8... 3.2767e3	0.1	kPa
Delta Adaptionswert EKP wenn durch Wobbeln Dampfblasen entstehen					
FBREG	V	0... FFFFH	0... 3.999938964844	61.0352e-6	-
Faktor zur Wichtung der Reglerantwort in PI-Adaption					
HDMKRWB	V	0... FFFFH	0... 15.624761581e3	0.23841858	g/min

Copyright ©Continental AG. Transmittal, reproduction, dissemination and/or editing of this document as well as utilisation of its contents and communication thereof to others without expressed authorisation are prohibited. Offenders will be held liable for payment of damages. All rights created by patent grant or registration of a utility model or design patent are reserved.

Name	Mode	Coded Limits	Display Limits	Resolution	Unit
Hysterese für Abfrage der Kraftstoffmenge für Freigabe Wobbeln					
KDBKSR	V	0... FFFFH	0... 3.999938964844	61.0352e-6	-
Bewertungsfaktor für D-Anteil des PID-Reglers (PI-Adaption)					
KIBKSKTA	V	0... FFFFH	0... 49.999923706055	762.939e-6	1/s
Integrationskonstante für K-Integrator pbksdiff_w_IKLim bei Kurztripanforderung					
KIBKSRF	V	0... FFFFH	0... 49.999923706055	762.939e-6	1/s
ntegrationskonstante für K-Integrator pbksdiff_w_IKLim bei fallender Druckflanke (pbkist_w <= pbksoll_w)					
KIBKSRS	V	0... FFFFH	0... 49.999923706055	762.939e-6	1/s
Integrationskonstante für K-Integrator pbksdiff_w_IKLim bei steigender Druckflanke (pbkist_w > pbksoll_w)					
KLDVRHDRF	V	0... FFFFH	-327.68 ...327.67	0.01	mm3
LDP_KLDVRHDRF_x	6	0... FFFFH	0... 15.624761581e3	0.23841858	g/min
Kennlinie Grenzwert Hochdruckreglerantwort für Dampfblasenerkennung bedarfsgesteuertes Kraftstoffsystem					
KLGDDMKR	V	0... FFFFH	0... 15.624761581e3	0.23841858	g/min
LDP_KLGDDMKR_x	8	0... FFFFH	0... 16383.75	0.25	1/min
KL Grenzwert Dynamik in dmkrhdev					
KLKPBKSR	V	0... FFFFH	0... 3.999938964844	61.0352e-6	-
LDP_KLKPBKSR_x	6	0... FFFFH	-3276.8 ...3276.7	0.1	kPa
Kennlinie Wichtung P-Anteil abh. von pbksdiff_w (PI-Adaption)					
LEPWMWUMN	V	0... FFFFH	0... 99.99847412109	0.00152588	%
Min-Schwelle für PWM-Wert f. Antiwindup-Check					
LEPWMWUMX	V	0... FFFFH	0... 99.99847412109	0.00152588	%
Max-Schwelle für PWM-Wert f. Antiwindup-Check					
PBKSADMN	V	0... FFFFH	0... 6553.5	0.1	kPa
untere Schwelle für Solldruckwert für Adaptionsfreigabe (PI-Adaption)					
PBKSADMX	V	0... FFFFH	0... 6553.5	0.1	kPa
obere Schwelle für Solldruckwert für Adaption (PI-Adaption)					
PBKSAIMN	V	8000... 7FFFH	-3276.8... 3.2767e3	0.1	kPa
Min-Wert des Integrators pbksia_w_ITLim					
PBKSAIMX	V	8000... 7FFFH	-3276.8... 3.2767e3	0.1	kPa
Max-Wert des Integrators pbksia_w_ITLim					
PBKSDFWUOFS	V	8000... 7FFFH	-3276.8... 3.2767e3	0.1	kPa
Offset für +/- -Test von pbksdiff f. Antiwindup-Check					
PBKSIADE	V	0... FFFFH	0... 6553.5	0.1	kPa
obere Schwelle für Betrag des I-Anteils zur Erkennung "Adaption kann vorzeitig beendet werden" (PI-Adaption)					
PBKSIAVS	V	0... FFFFH	0... 6553.5	0.1	kPa
obere Schwelle für Betrag von pbksiad_w zur Freigabe der PI-Adaption					
PBKSMN	V	8000... 7FFFH	-3276.8... 3.2767e3	0.1	kPa
minimaler I-Anteil des PID-Reglers (PI-Adaption)					
PBKSMX	V	8000... 7FFFH	-3276.8... 3.2767e3	0.1	kPa
maximaler I-Anteil des PID-Reglers (PI-Adaption)					

Copyright ©Continental AG. Transmittal, reproduction, dissemination and/or editing of this document as well as utilisation of its contents and communication thereof to others without expressed authorisation are prohibited. Offenders will be held liable for payment of damages. All rights created by patent grant or registration of a utility model or design patent are reserved.

Name	Mode	Coded Limits	Display Limits	Resolution	Unit
PBKSVSKT	V	0... FFFFH	0... 6553.5	0.1	kPa
obere Schwelle für Betrag von pbksiad_w bei Kurztripanforderung (zur Freigabe der PI-Adaption)					
PBKSWBMN	V	0... FFFFH	0... 6553.5	0.1	kPa
unterer Grenzwert Solldruck zur Wobbelfreigabe					
PBKSWBMX	V	0... FFFFH	0... 6553.5	0.1	kPa
oberer Grenzwert Solldruck zur Wobbelfreigabe					
TDFWBKS	V	0... FFH	0... 5.1	0.02	s
Entprellzeit für Test auf konstante Einspritzmenge (für Freigabe Wobbeln)					
TMOTGBKS	V	0... FFH	-48... 143.25	0.75	°C
Temperaturgrenze tmot für Freigabe Adaption BKS					
TPERWOB	V	0... FFFFH	0... 1310.7	0.02	s
Periodendauer Wobbeln BKS					
TWATFSMX	V	0... FFFFH	0... 6553.5	0.1	s
maximale Wartezeit für die Auswertung Tankfüllstand					
TWBKSDZ	V	0... FFFFH	0... 1310.7	0.02	s
Zeitgrenze für Verbot Wobbeln BKS zwischen zwei Wobbelereignissen					
VFZGWBKSE	V	0... FFFFH	0... 511.9921875	0.0078125	km/h
Fahrzeuggeschwindigkeit Grenzwert für Freigabe Wobbeln BKS					
VHDPVRFIL	V	0... FFFFH	0... 655.35	0.01	mm3
Schwellwert Kompression HDP für Freigabe Filterung von vrhdr in der gesteuerten BKS					
ZADBKS	V	1... FFFFH	0.1... 6553.5	0.1	s
Zeitkonstante für Integrator pbksia_w_ITLim					
ZADKTBKS	V	1... FFFFH	0.1... 6553.5	0.1	s
Zeitkonstante für Integrator pbksia_w_ITLim bei Kurztripanforderung					
ZBSADWBKSE	V	0... FFH	0... 5.1	0.02	s
Zeitverzögerung nach Schubabschaltung für Freigabe Wobbeln BKS					
ZDMKRHDEV	V	1... FFFFH	0.02... 1310.7	0.02	s
Filterzeitkonstante für dmkrhdev_w_LT zur Bestimmung konstanter Einspritzphasen					
ZGAABKS	V	0... FFFFH	0... 6553.5	0.1	s
obere Grenze für Zeit seit Adaptionsbeginn zur Bestimmung "Adaption abgelaufen" (PI-Adaption)					
ZKAADBKS	V	0... FFFFH	0... 6553.5	0.1	s
Entprellzeit für Kurztripanforderung zum Abbrechen der Adaption (PI-Adaption)					
ZKTADBKS	V	0... FFFFH	0... 6553.5	0.1	s
Zeitdauer Kurztripadaption (PI-Adaption)					
ZTDEBKS	V	1... FFFFH	0.1... 6553.5	0.1	s
Filterzeitkonstante für pbksiao_w_LT zur Erkennung quasi-stationärer Betriebsbedingungen					
ZVRHDRBKS	V	1... FFFFH	0.02... 1310.7	0.02	s
Tiefpaßfilterzeitkonstante für Filterung vrhdr in der %BKS					

▶ General Information

▶ Application Conditions

Initialisation: `RST, NVMRES, NVMINI, NVMSTO, CLRFMY, IGKON`

Activation: `always`

Copyright©Continental AG. Transmittal, reproduction, dissemination and/or editing of this document as well as utilisation of its contents and communication thereof to others without expressed authorisation are prohibited. Offenders will be held liable for payment of damages. All rights created by patent grant or registration of a utility model or design patent are reserved.

Deactivation: `never`

Recurrence: `20MS, 100MS`

▶ Function Description

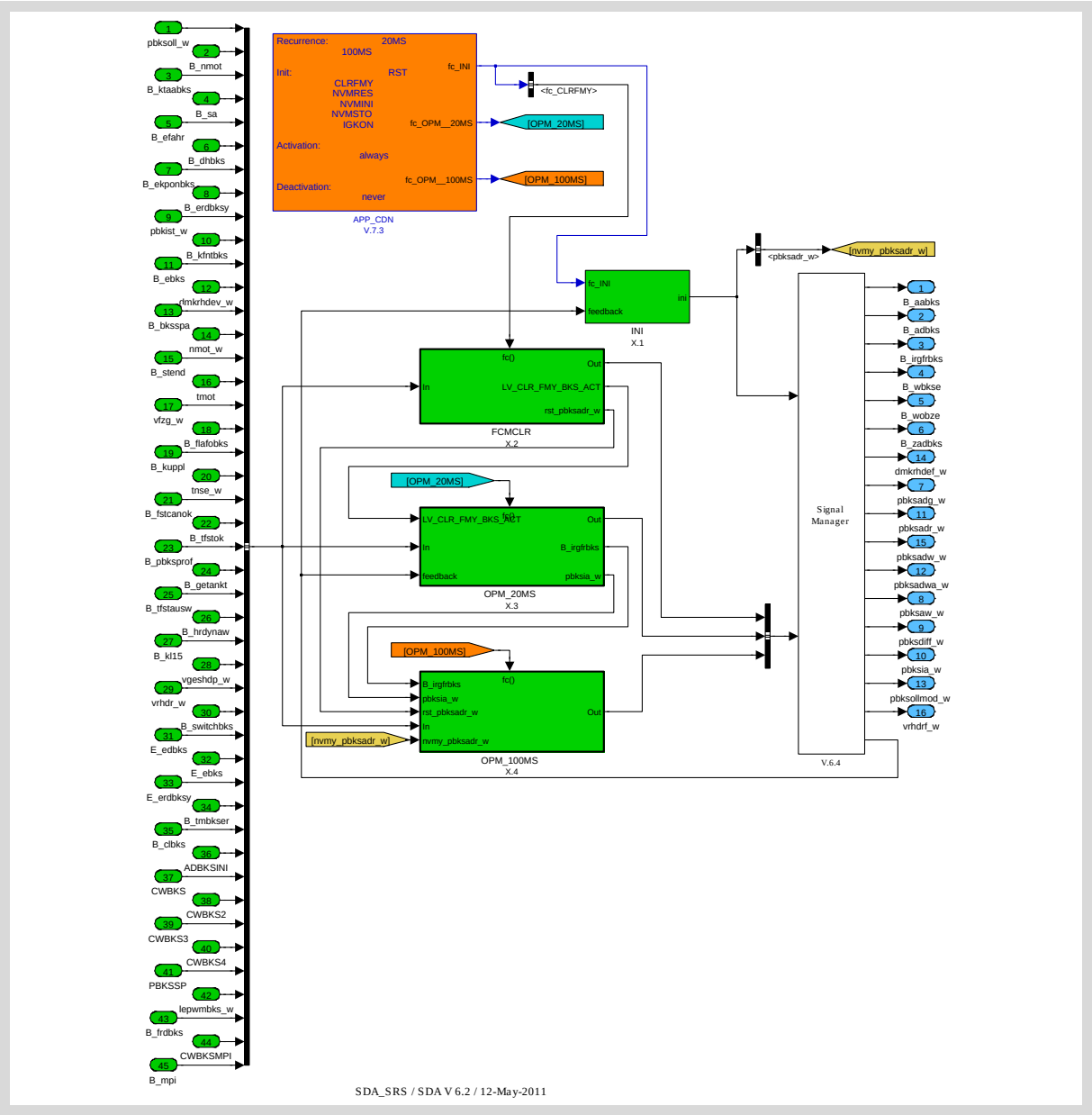

Figure 43.10.1:

Path: FUSL_M9014

Copyright ©Continental AG. Transmittal, reproduction, dissemination and/or editing of this document as well as utilisation of its contents and communication thereof to others without expressed authorisation are prohibited. Offenders will be held liable for payment of damages. All rights created by patent grant or registration of a utility model or design patent are reserved.

43.10.1 Initialization

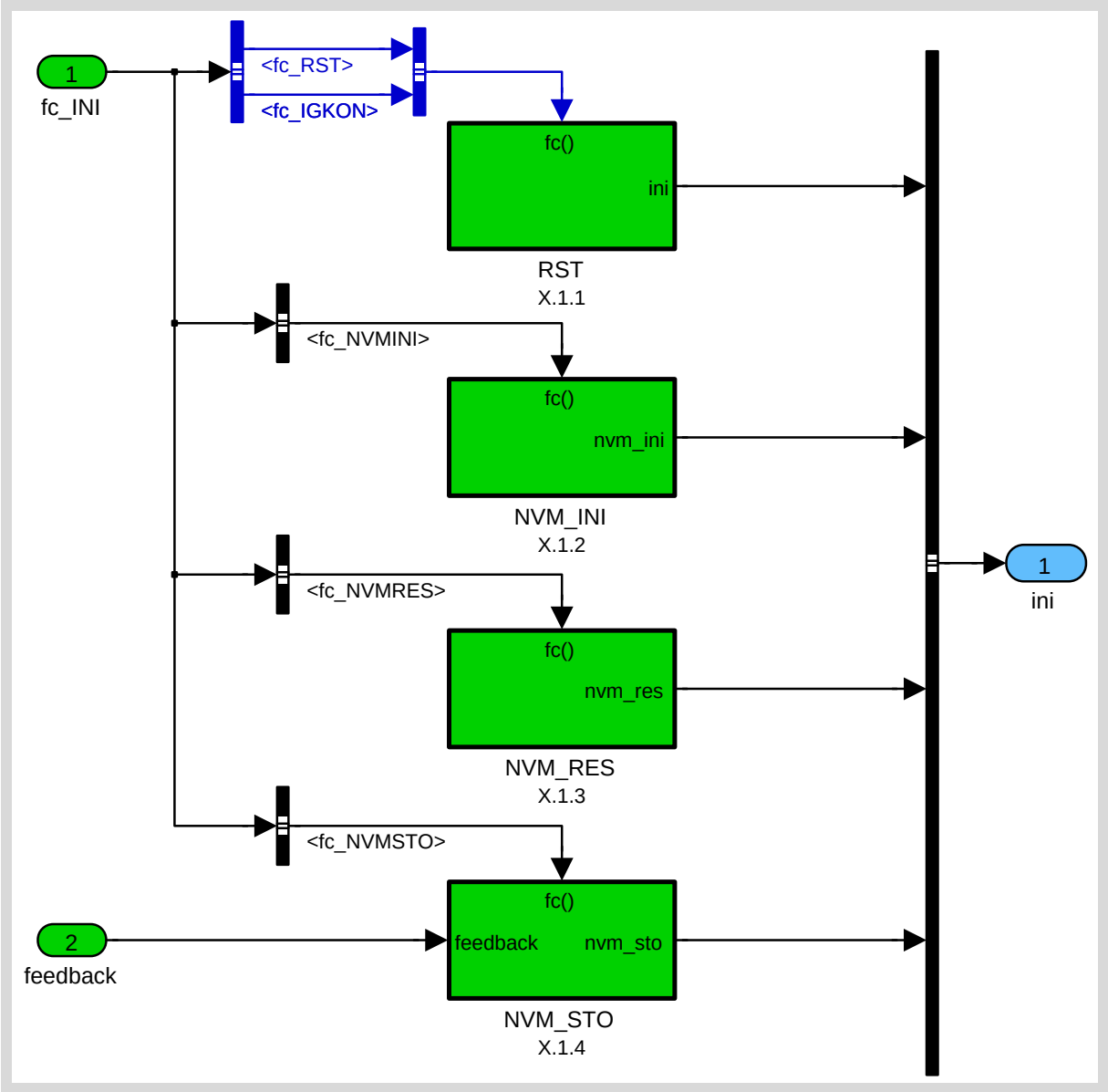

Figure 43.10.2:

Path: FUSL_M9014/INI

43.10.1.1 Reset

Copyright ©Continental AG. Transmittal, reproduction, dissemination and/or editing of this document as well as utilisation of its contents and communication thereof to others without expressed authorisation are prohibited. Offenders will be held liable for payment of damages. All rights created by patent grant or registration of a utility model or design patent are reserved.

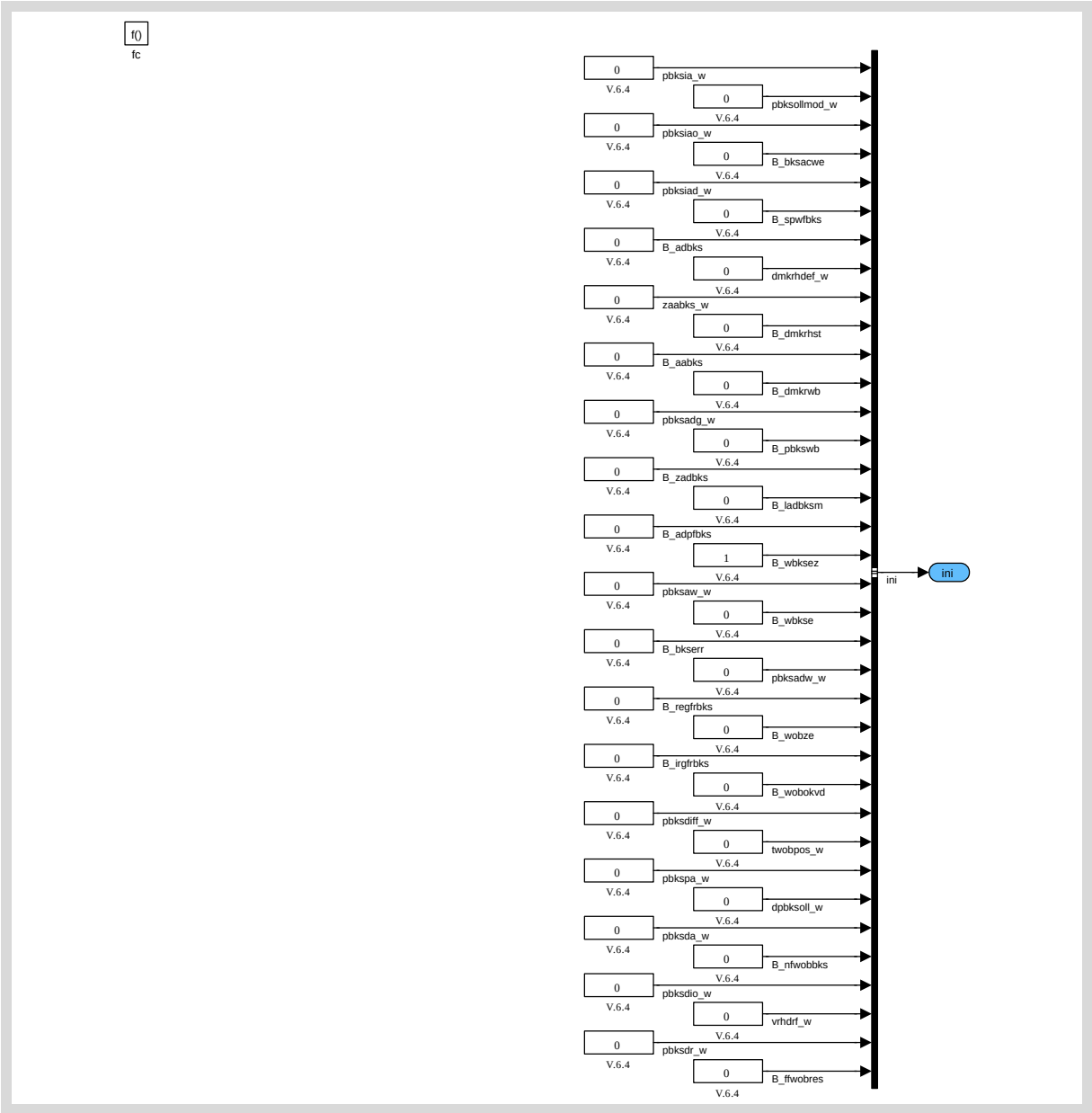

Figure 43.10.3:

Path: FUSL_M9014/INI/RST

Copyright ©Continental AG. Transmittal, reproduction, dissemination and/or editing of this document as well as utilisation of its contents and communication thereof to others without expressed authorisation are prohibited. Offenders will be held liable for payment of damages. All rights created by patent grant or registration of a utility model or design patent are reserved.

43.10.1.2 NVM_INI

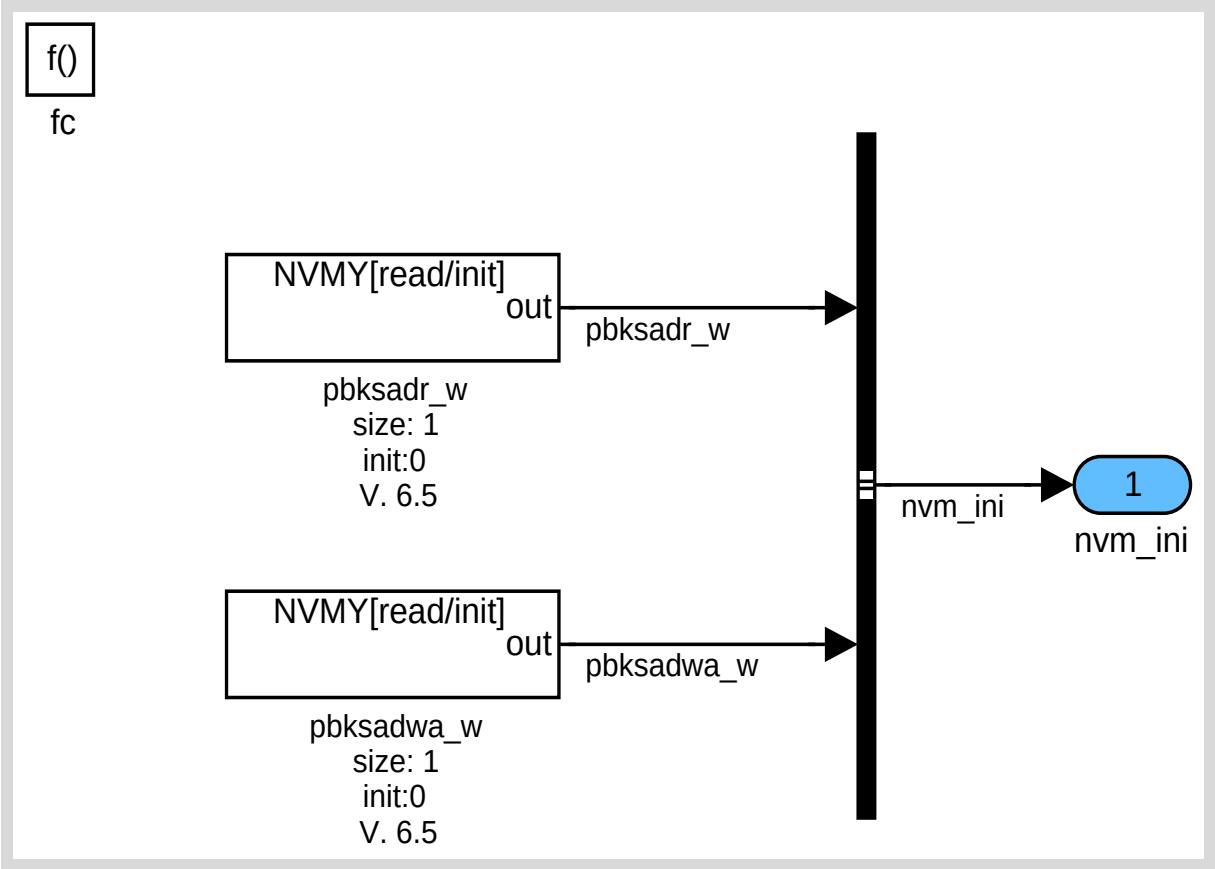

Figure 43.10.4:

Path: FUSL_M9014/INI/NVM_INI

Copyright ©Continental AG. Transmittal, reproduction, dissemination and/or editing of this document as well as utilisation of its contents and communication thereof to others without expressed authorisation are prohibited. Offenders will be held liable for payment of damages. All rights created by patent grant or registration of a utility model or design patent are reserved.

43.10.1.3 NVM_RES

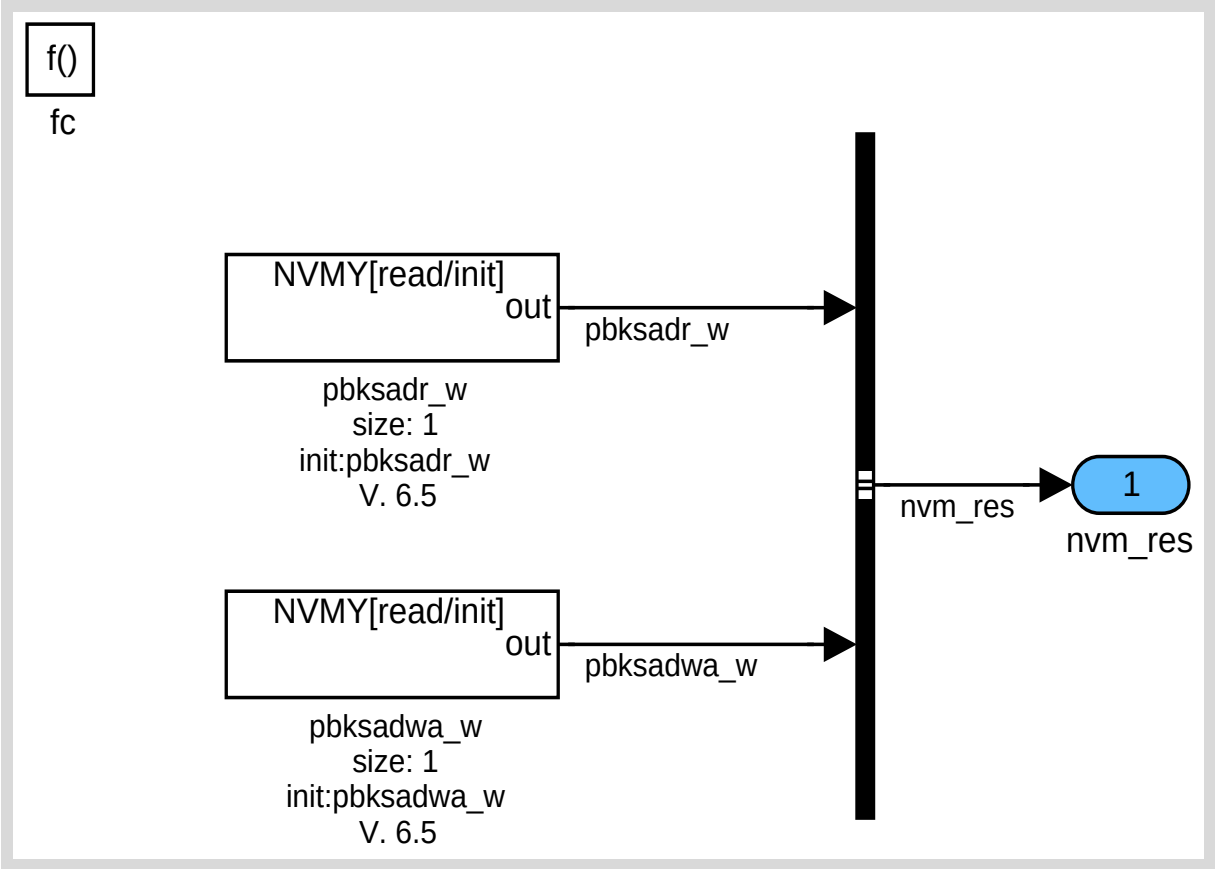

Figure 43.10.5:

Path: FUSL_M9014/INI/NVM_RES

Copyright ©Continental AG. Transmittal, reproduction, dissemination and/or editing of this document as well as utilisation of its contents and communication thereof to others without expressed authorisation are prohibited. Offenders will be held liable for payment of damages. All rights created by patent grant or registration of a utility model or design patent are reserved.

43.10.1.4 NVM_STO

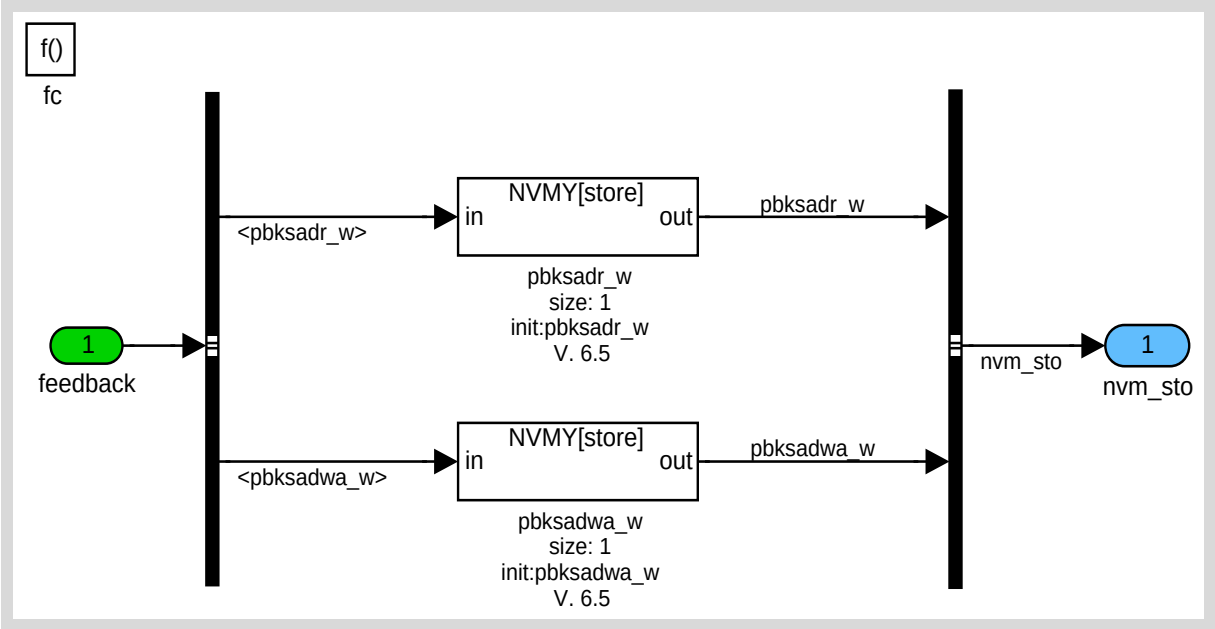

Figure 43.10.6:

Path: FUSL_M9014/INI/NVM_STO

Copyright ©Continental AG. Transmittal, reproduction, dissemination and/or editing of this document as well as utilisation of its contents and communication thereof to others without expressed authorisation are prohibited. Offenders will be held liable for payment of damages. All rights created by patent grant or registration of a utility model or design patent are reserved.

43.10.2 FCMCLR

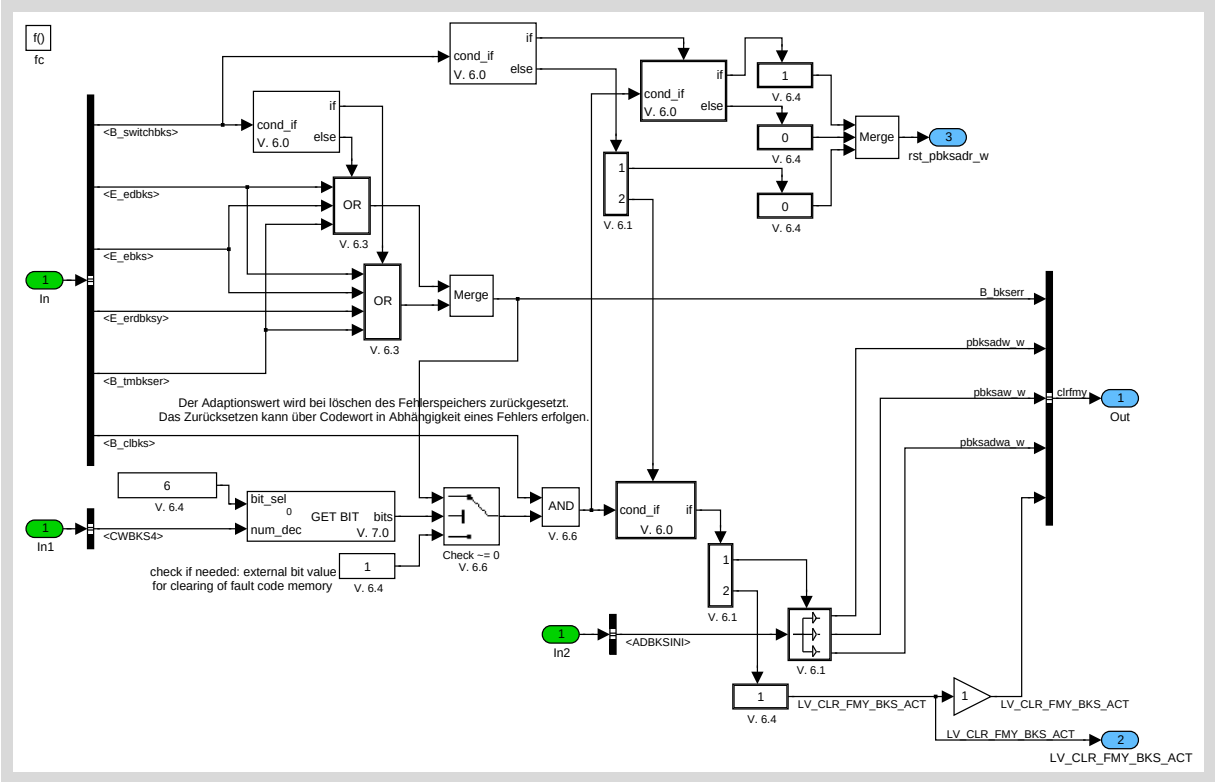

Figure 43.10.7:

Path: FUSL_M9014/FCMCLR

Subsystem FCMCLR must be calculated before error management erases all errors.

43.10.3 OPM_20MS

Copyright ©Continental AG. Transmittal, reproduction, dissemination and/or editing of this document as well as utilisation of its contents and communication thereof to others without expressed authorisation are prohibited. Offenders will be held liable for payment of damages. All rights created by patent grant or registration of a utility model or design patent are reserved.

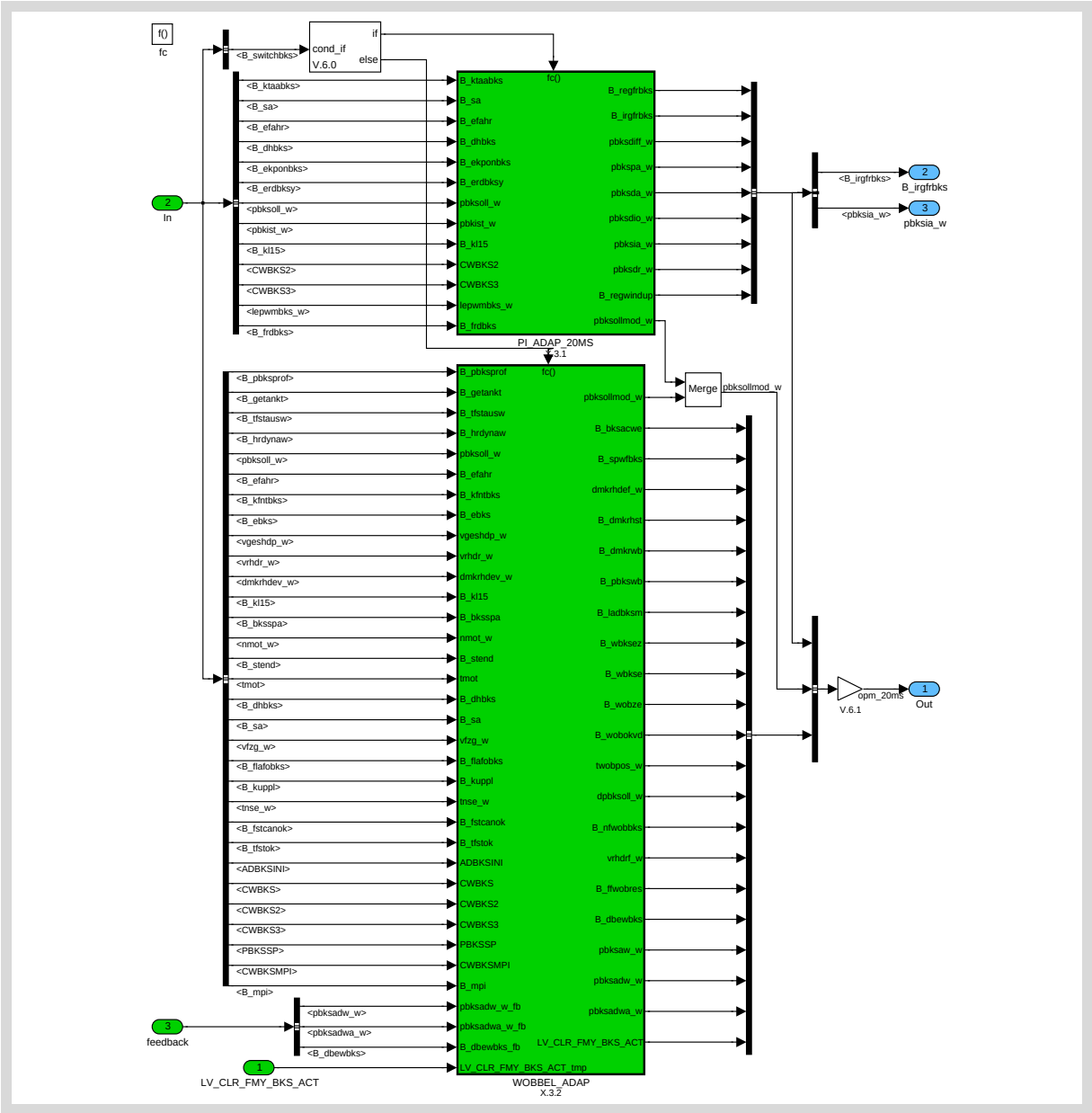

Figure 43.10.8:

Path: FUSL_M9014/OPM_20MS

43.10.3.1 OPM_20MS/PI_ADAP_20MS

Copyright ©Continental AG. Transmittal, reproduction, dissemination and/or editing of this document as well as utilisation of its contents and communication thereof to others without expressed authorisation are prohibited. Offenders will be held liable for payment of damages. All rights created by patent grant or registration of a utility model or design patent are reserved.

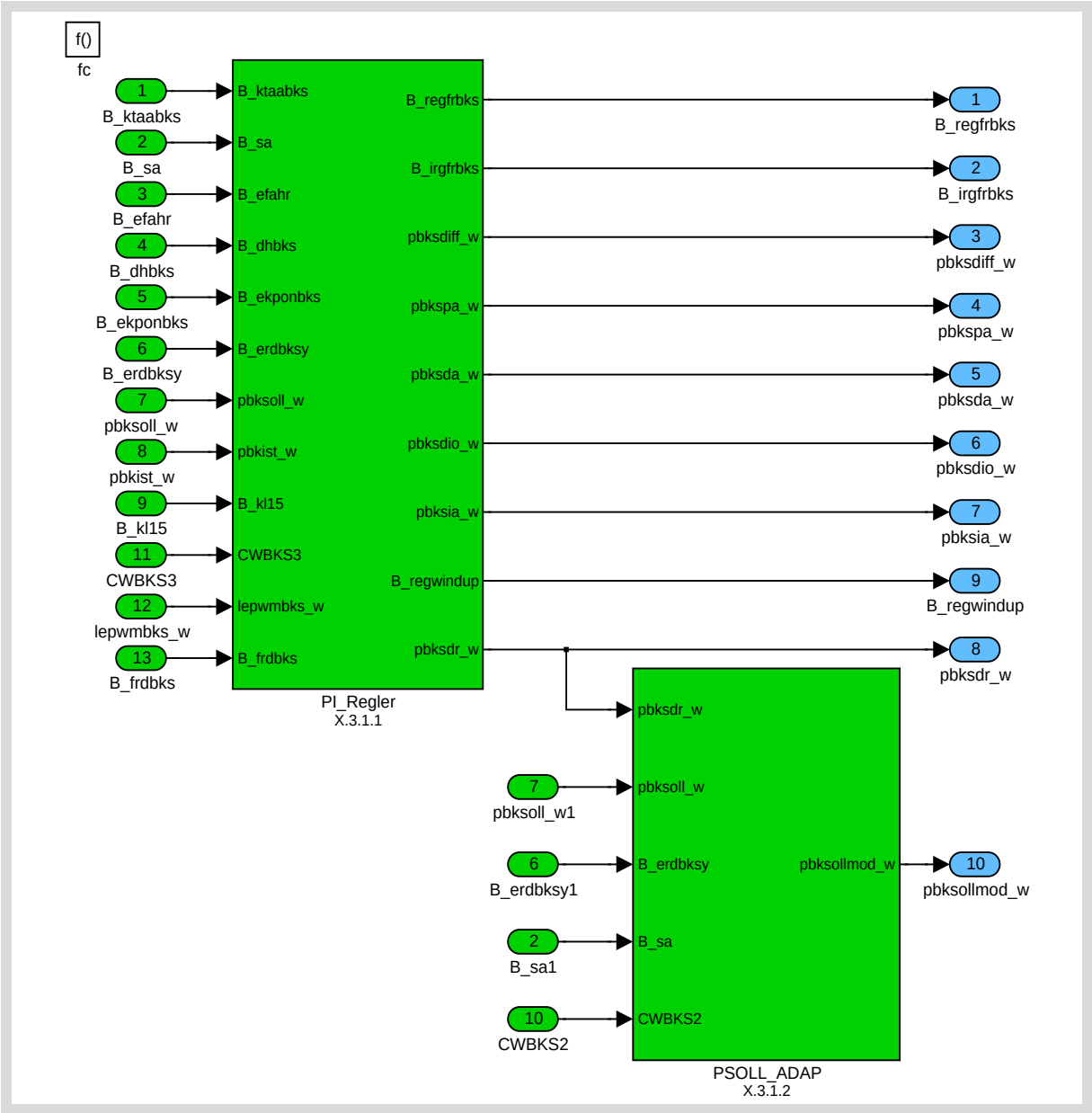

Figure 43.10.9:

Path: FUSL_M9014/OPM_20MS/PI_ADAP_20MS

1.3.1.1 OPM_20MS/PI_ADAP_20MS/PI_Regler

Copyright ©Continental AG. Transmittal, reproduction, dissemination and/or editing of this document as well as utilisation of its contents and communication thereof to others without expressed authorisation are prohibited. Offenders will be held liable for payment of damages. All rights created by patent grant or registration of a utility model or design patent are reserved.

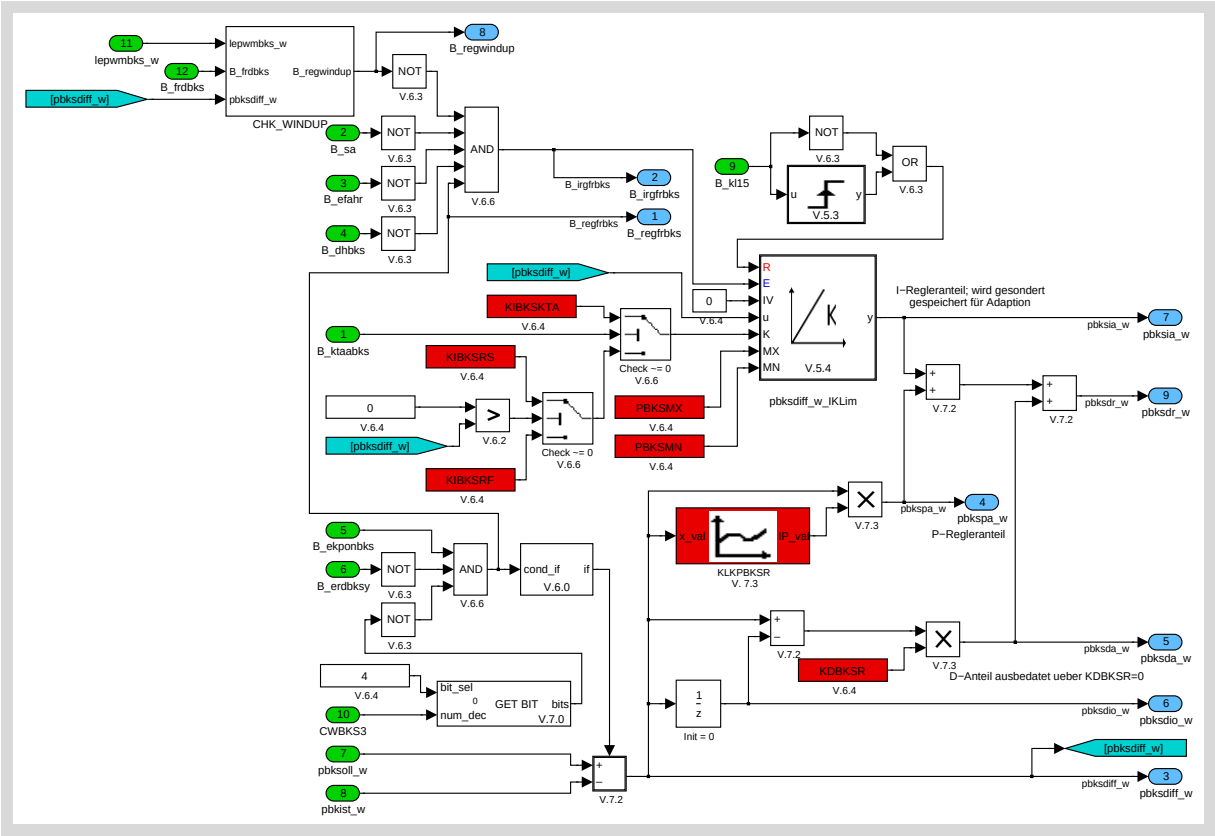

Figure 43.10.10:

Path: FUSL_M9014/OPM_20MS/PI_ADAP_20MS/PI_Regler

1.3.1.1.1 OPM_20MS/PI_ADAP_20MS /PI_Regler/CHK_WINDUP

Copyright ©Continental AG. Transmittal, reproduction, dissemination and/or editing of this document as well as utilisation of its contents and communication thereof to others without expressed authorisation are prohibited. Offenders will be held liable for payment of damages. All rights created by patent grant or registration of a utility model or design patent are reserved.

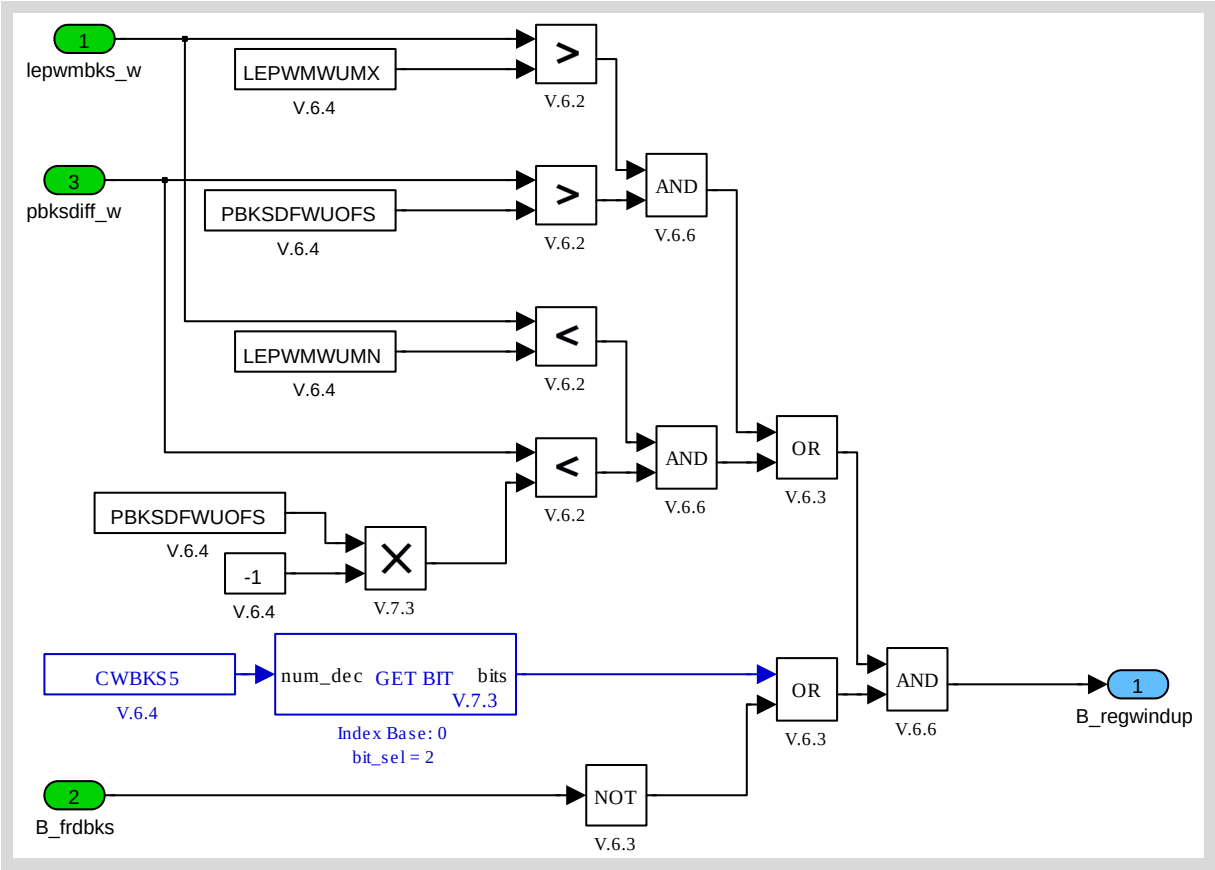

Figure 43.10.11:

1.3.1.2 OPM_20MS/PI_ADAP_20MS/PSOLL_ADAP

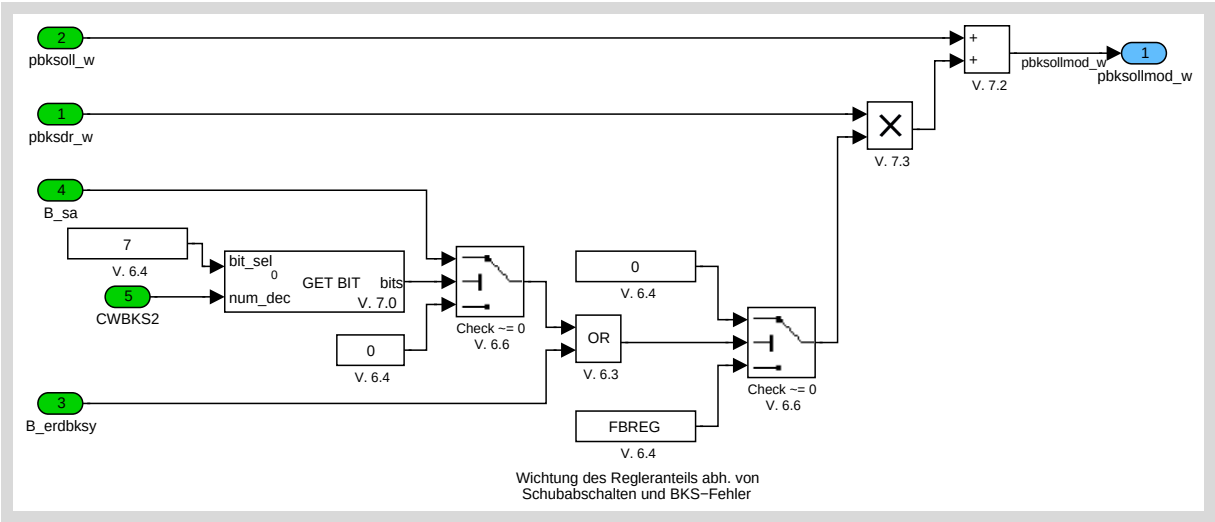

Figure 43.10.12:

Path: FUSL_M9014/OPM_20MS/PI_ADAP_20MS/PSOLL_ADAP

Copyright ©Continental AG. Transmittal, reproduction, dissemination and/or editing of this document as well as utilisation of its contents and communication thereof to others without expressed authorisation are prohibited. Offenders will be held liable for payment of damages. All rights created by patent grant or registration of a utility model or design patent are reserved.

43.10.3.2 OPM_20MS/WOBBEL_ADAP

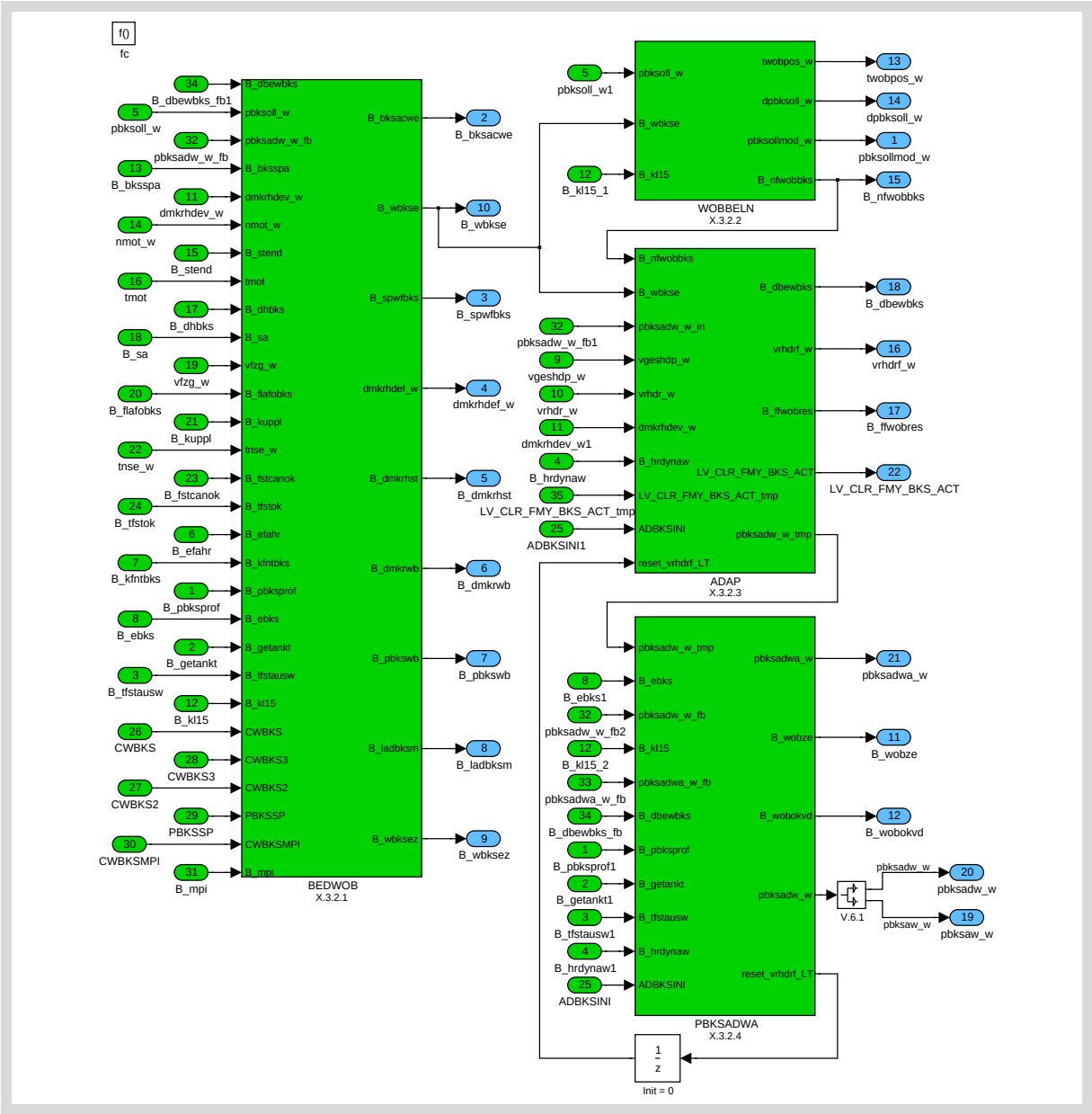

Figure 43.10.13:

Path: FUSL_M9014/OPM_20MS/WOBBEL_ADAP

1.3.2.1 OPM_20MS/WOBBEL_ADAP/BEDWOB

Copyright ©Continental AG. Transmittal, reproduction, dissemination and/or editing of this document as well as utilisation of its contents and communication thereof to others without expressed authorisation are prohibited. Offenders will be held liable for payment of damages. All rights created by patent grant or registration of a utility model or design patent are reserved.

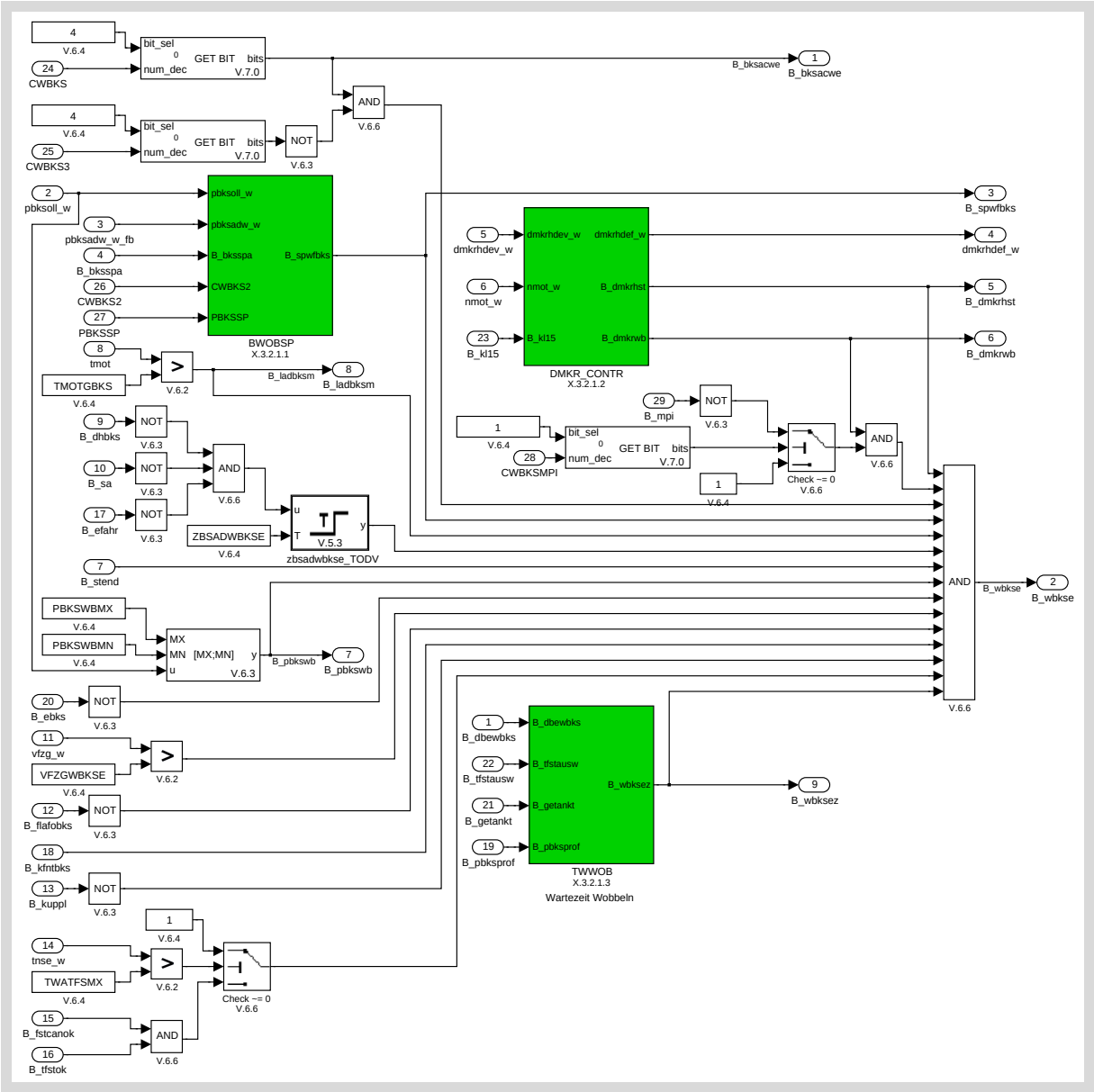

Figure 43.10.14:

Path: FUSL_M9014/OPM_20MS/WOBBEL_ADAP/BEDWOB

1.3.2.1.1 OPM_20MS/WOBBEL_ADAP/BEDWOB/BWOBSP

Copyright ©Continental AG. Transmittal, reproduction, dissemination and/or editing of this document as well as utilisation of its contents and communication thereof to others without expressed authorisation are prohibited. Offenders will be held liable for payment of damages. All rights created by patent grant or registration of a utility model or design patent are reserved.

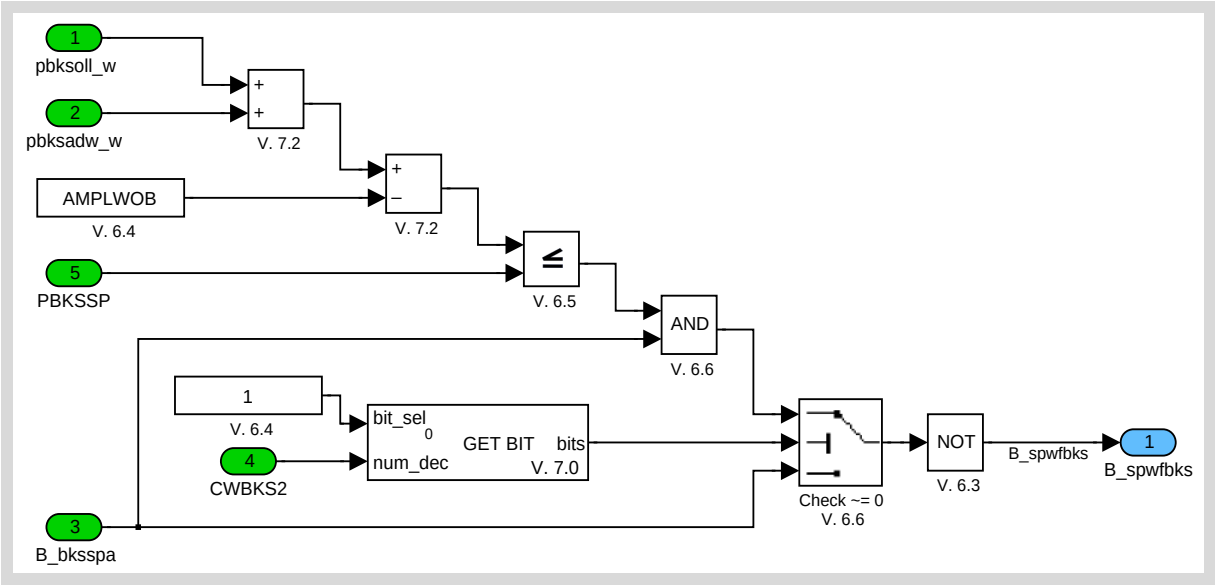

Figure 43.10.15:

Path: FUSL_M9014/OPM_20MS/WOBBEL_ADAP/BEDWOB/BWOBSP

1.3.2.1.2 OPM_20MS/WOBBEL_ADAP/BEDWOB/DMKR_CONTR

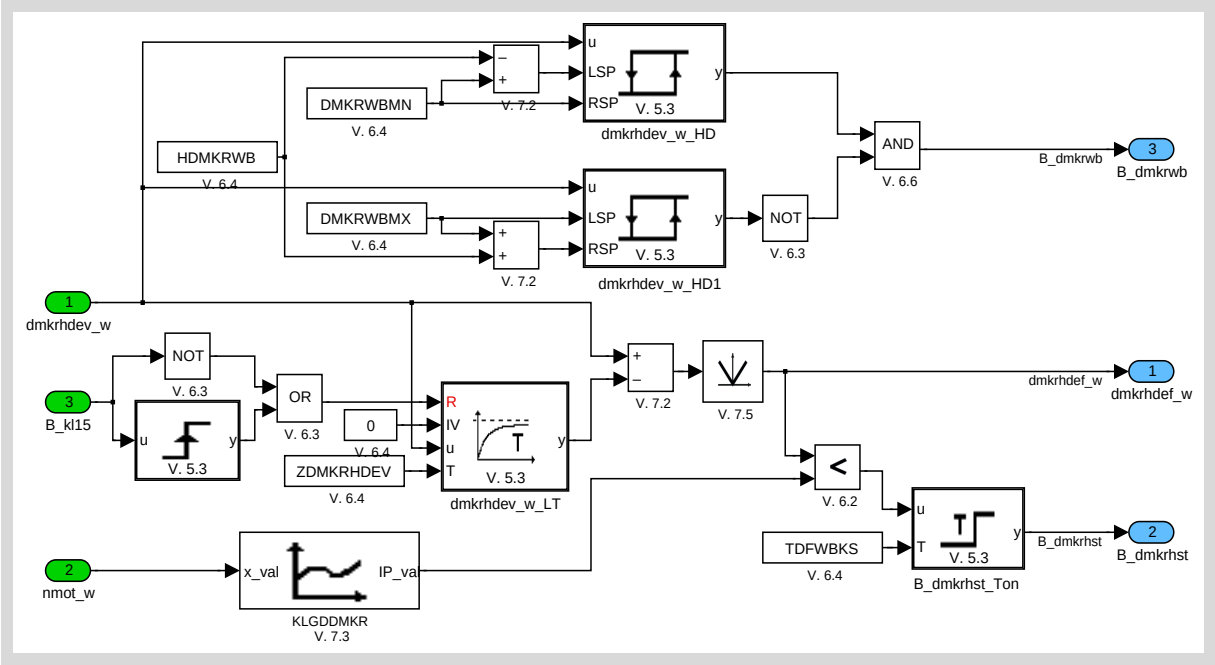

Figure 43.10.16:

Path: FUSL_M9014/OPM_20MS/WOBBEL_ADAP/BEDWOB/DMKR_CONTR

1.3.2.1.3 OPM_20MS/WOBBEL_ADAP/BEDWOB/TWWOB

Copyright ©Continental AG. Transmittal, reproduction, dissemination and/or editing of this document as well as utilisation of its contents and communication thereof to others without expressed authorisation are prohibited. Offenders will be held liable for payment of damages. All rights created by patent grant or registration of a utility model or design patent are reserved.

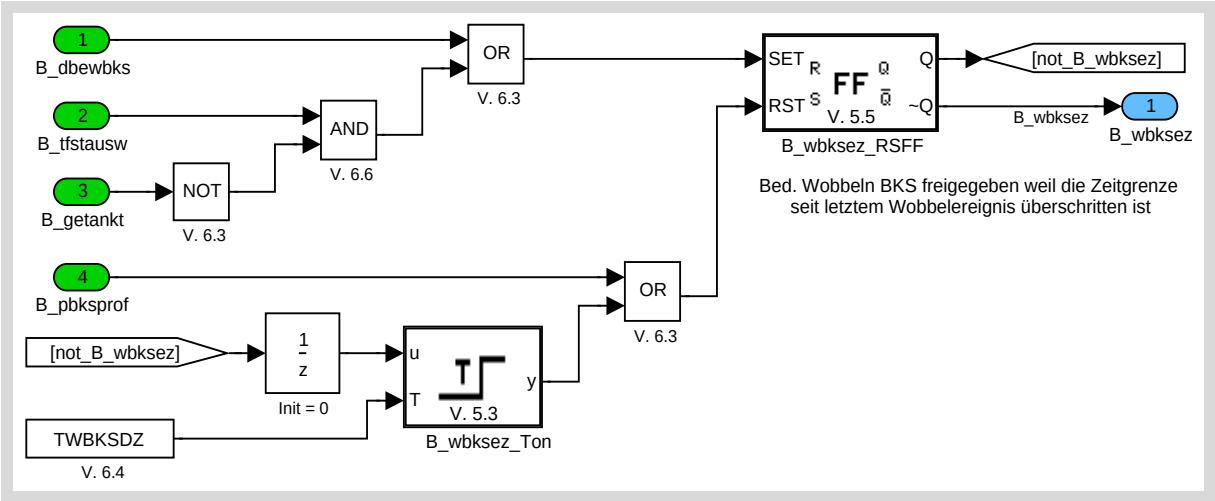

Figure 43.10.17:

Path: FUSL_M9014/OPM_2OMS/WOBBEL_ADAP/BEDWOB/TWWOB

1.3.2.2 OPM_2OMS/WOBBEL_ADAP/WOBBELN

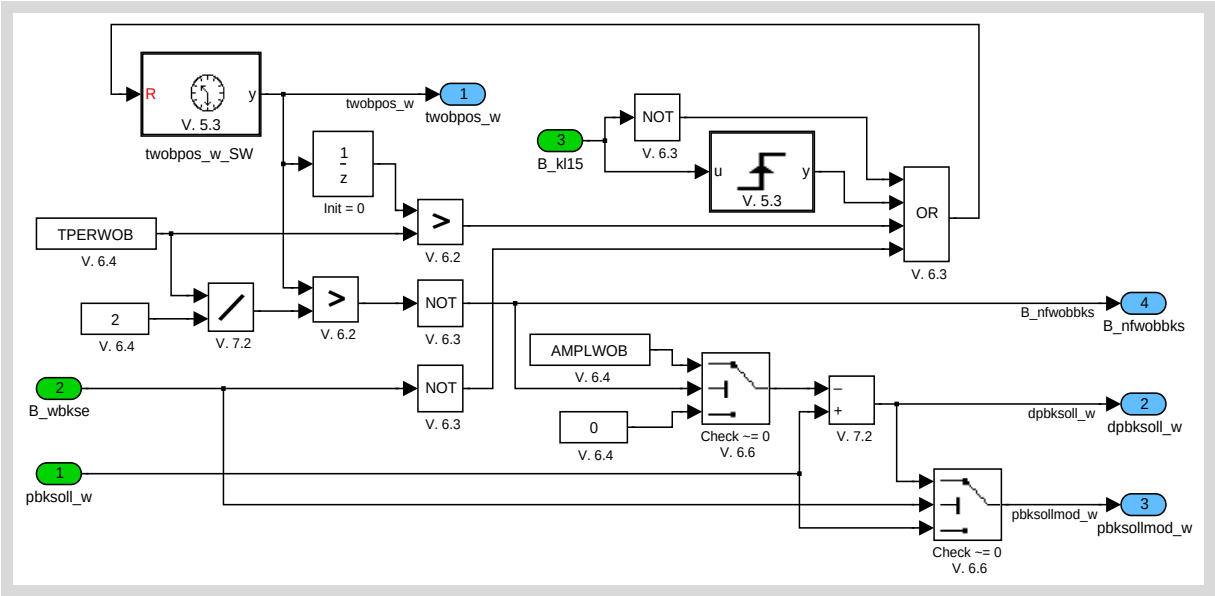

Figure 43.10.18:

Path: FUSL_M9014/OPM_2OMS/WOBBEL_ADAP/WOBBELN

1.3.2.3 OPM_2OMS/WOBBEL_ADAP/ADAP

Copyright ©Continental AG. Transmittal, reproduction, dissemination and/or editing of this document as well as utilisation of its contents and communication thereof to others without expressed authorisation are prohibited. Offenders will be held liable for payment of damages. All rights created by patent grant or registration of a utility model or design patent are reserved.

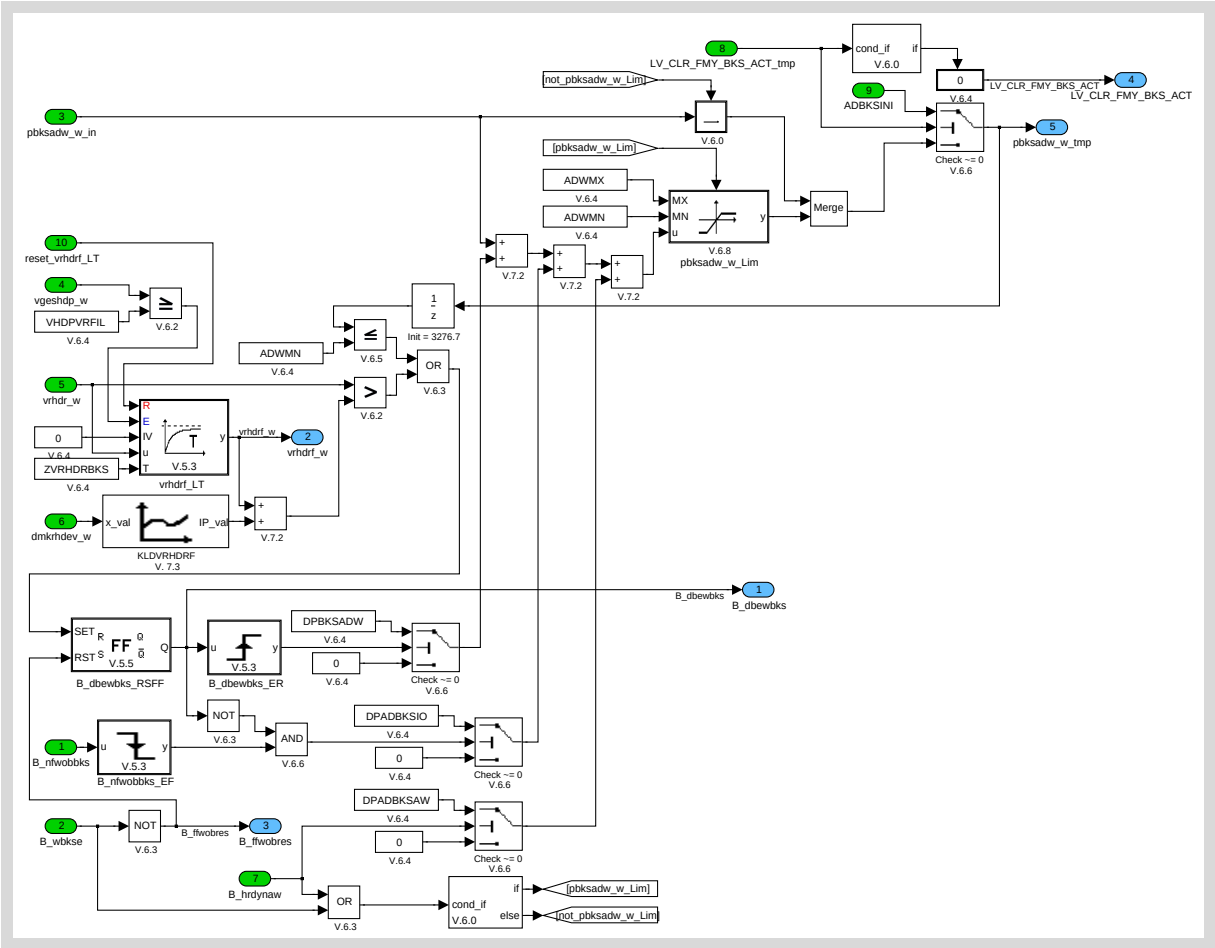

Figure 43.10.19:

Path: FUSL_M9014/OPM_20MS/WOBBEL_ADAP/ADAP

1.3.2.4 OPM_20MS/WOBBEL_ADAP/PBKSADWA

Copyright ©Continental AG. Transmittal, reproduction, dissemination and/or editing of this document as well as utilisation of its contents and communication thereof to others without expressed authorisation are prohibited. Offenders will be held liable for payment of damages. All rights created by patent grant or registration of a utility model or design patent are reserved.

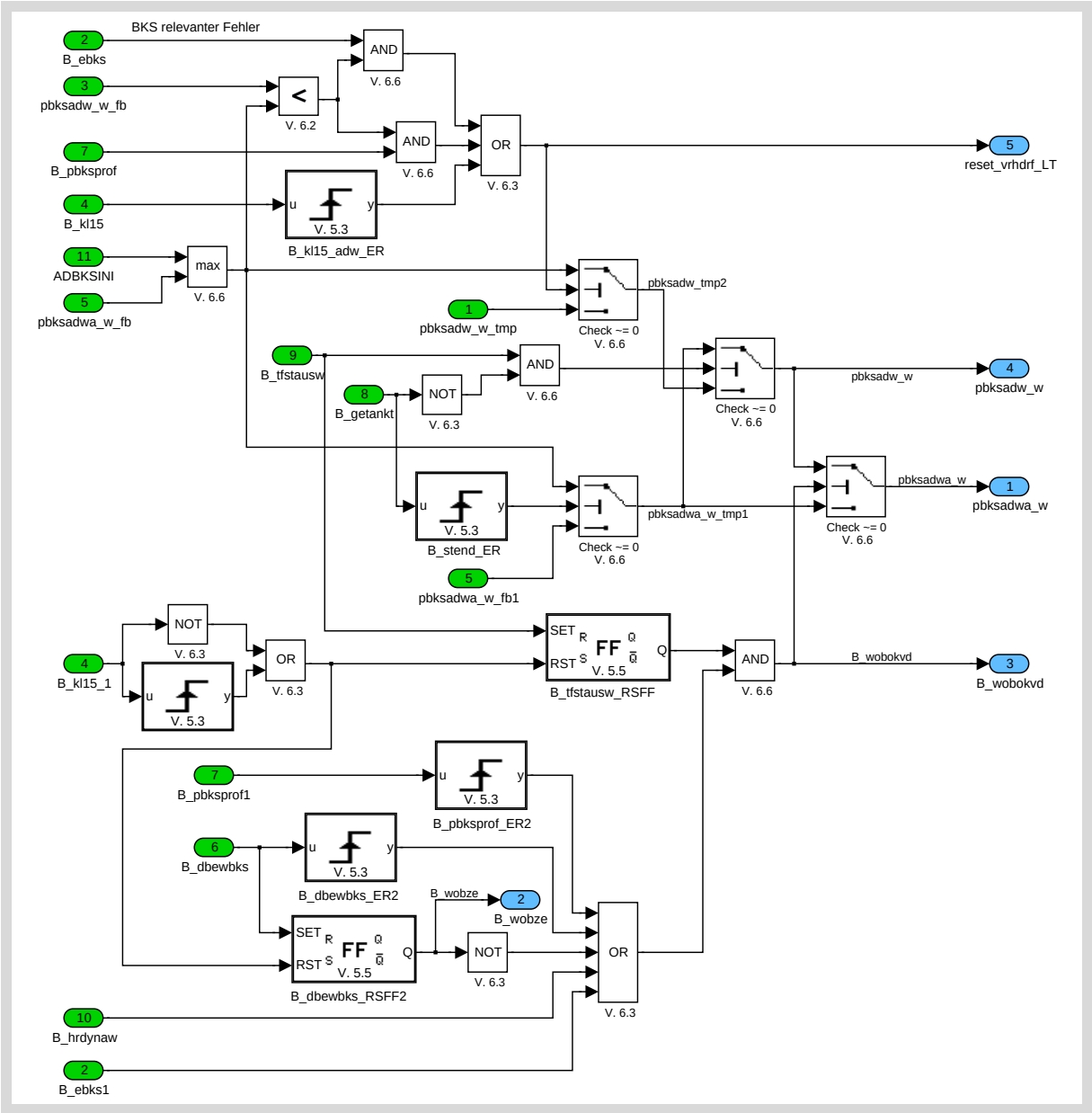

Figure 43.10.20:

Path: FUSL_M9014/OPM_20MS/WOBBEL_ADAP/PBKSADWA

Copyright ©Continental AG. Transmittal, reproduction, dissemination and/or editing of this document as well as utilisation of its contents and communication thereof to others without expressed authorisation are prohibited. Offenders will be held liable for payment of damages. All rights created by patent grant or registration of a utility model or design patent are reserved.

43.10.4 OPM_100MS

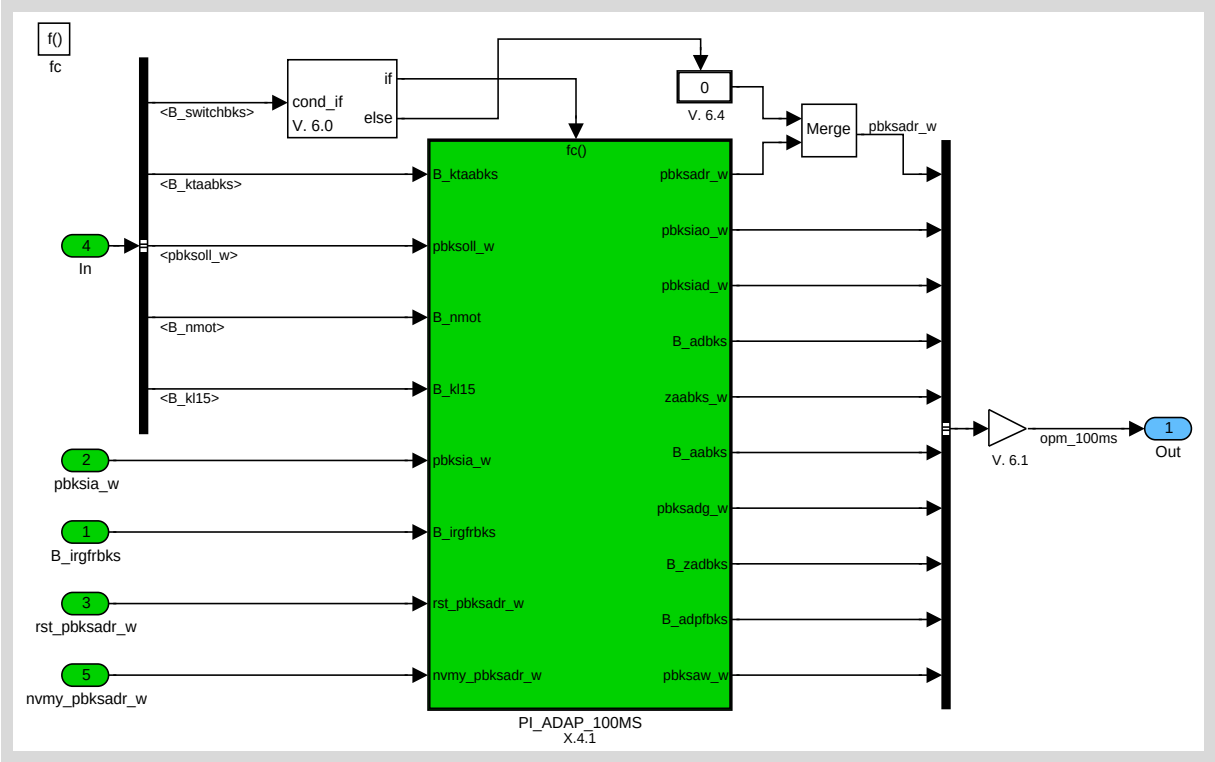

Figure 43.10.21:

Path: FUSL_M9014/OPM_100MS

Copyright ©Continental AG. Transmittal, reproduction, dissemination and/or editing of this document as well as utilisation of its contents and communication thereof to others without expressed authorisation are prohibited. Offenders will be held liable for payment of damages. All rights created by patent grant or registration of a utility model or design patent are reserved.

43.10.4.1 OPM_100MS/PI_ADAP_100MS

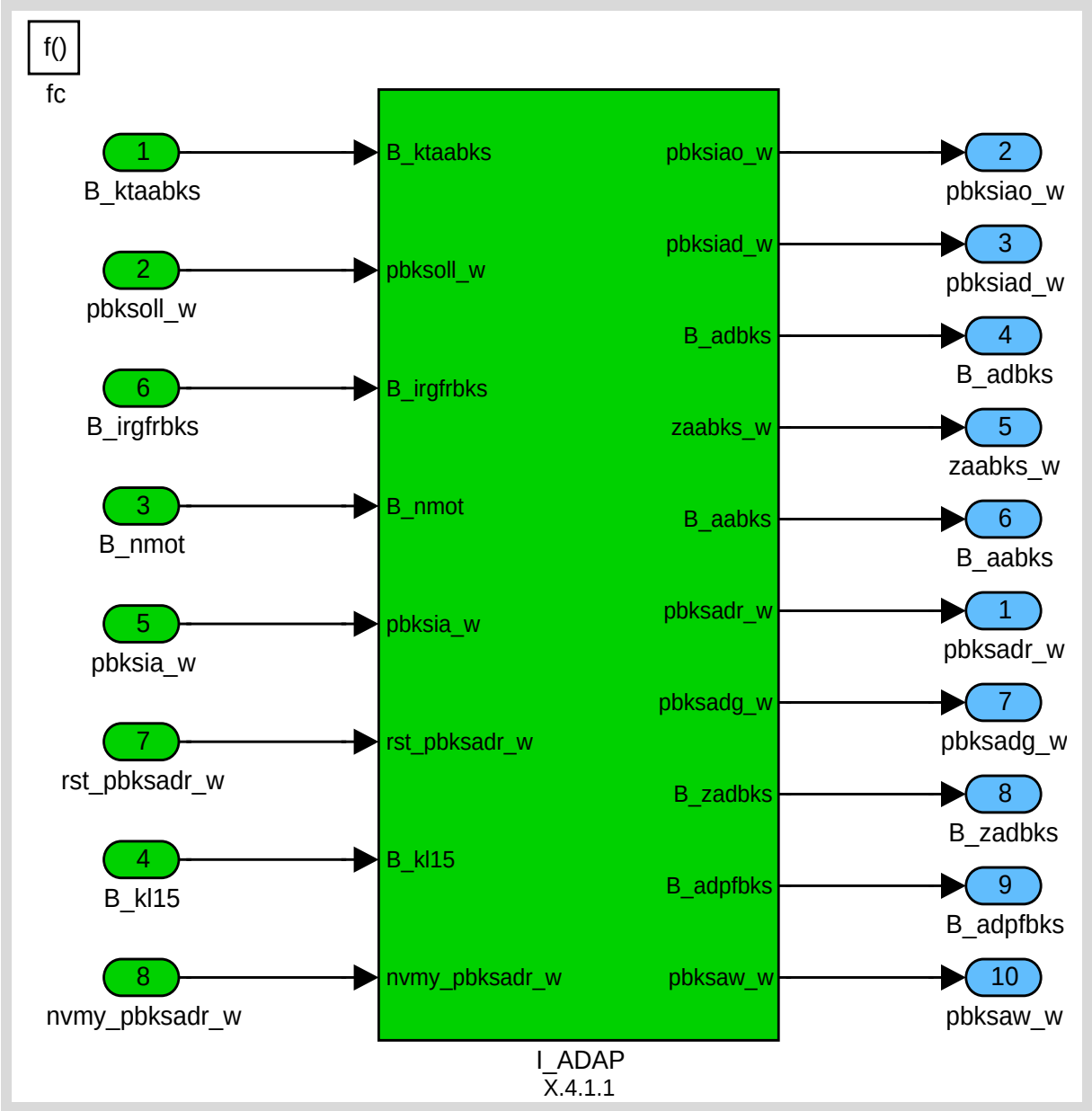

Figure 43.10.22:

Path: FUSL_M9014/OPM_100MS/PI_ADAP_100MS

1.4.1.1 OPM_100MS/PI_ADAP_100MS/I_ADAP

Copyright ©Continental AG. Transmittal, reproduction, dissemination and/or editing of this document as well as utilisation of its contents and communication thereof to others without expressed authorisation are prohibited. Offenders will be held liable for payment of damages. All rights created by patent grant or registration of a utility model or design patent are reserved.

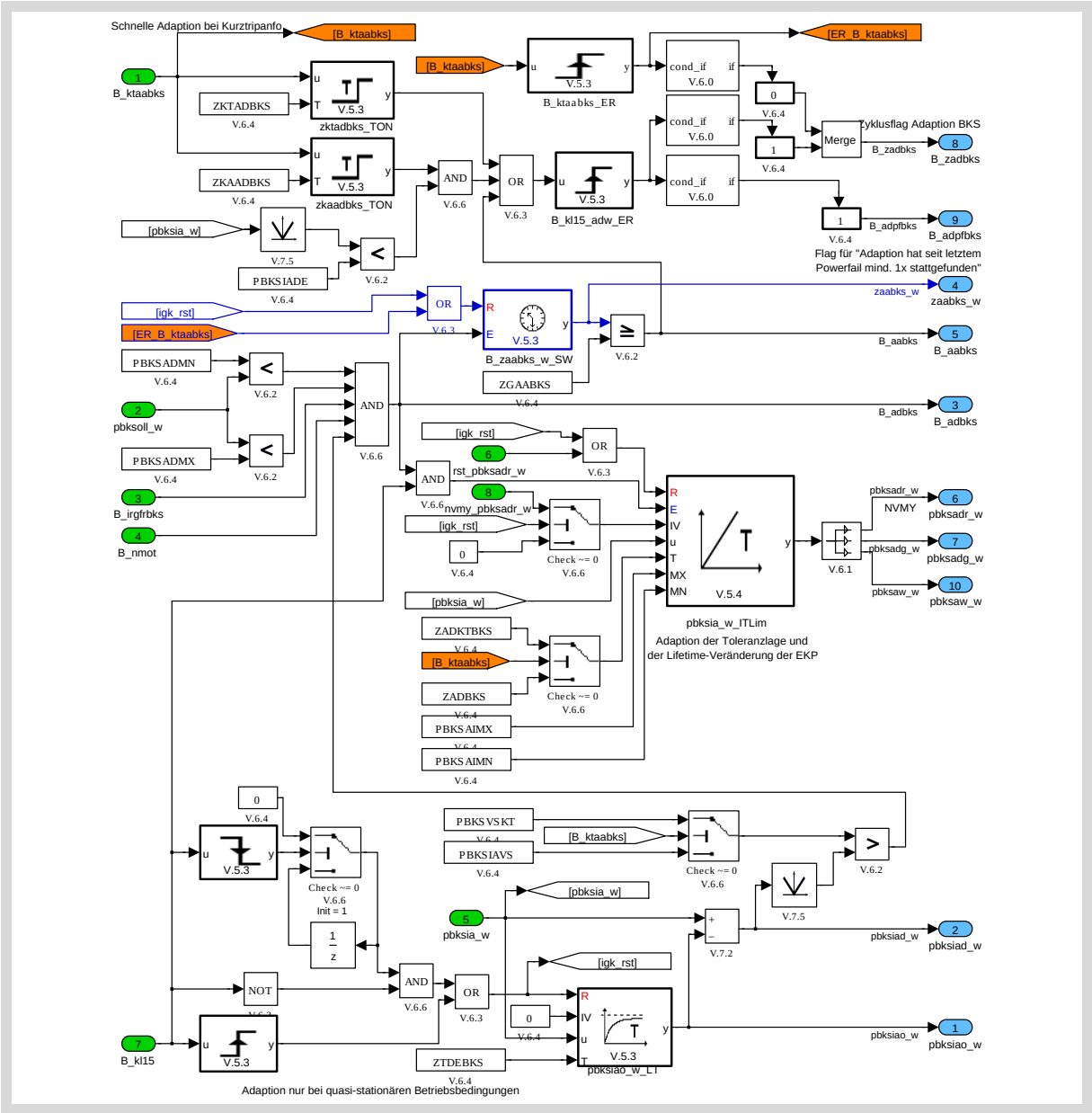

Figure 43.10.23:

Path: FUSL_M9014/OPM_100MS/PI_ADAP_100MS/I_ADAP

Copyright ©Continental AG. Transmittal, reproduction, dissemination and/or editing of this document as well as utilisation of its contents and communication thereof to others without expressed authorisation are prohibited. Offenders will be held liable for payment of damages. All rights created by patent grant or registration of a utility model or design patent are reserved.

43.11 Fuel pump low pressure control (Appl. Inc.)

▶ Data Definition

Name	Mode	Coded Limits	Display Limits	Resolution	Unit
arqtbks_w	O/V	0... FFFFH	0... 99.99847412109	0.00152588	%
PWM-Wert bei Stellgliedtest					
AuxHtg_bFIPmpReq	O/V	0... 1H	0 ...1	1	-
Standheizungsanforderung an EKP über CAN					
B_airbag	O/V	0... 1H	0 ...1	1	-
Bedingung Crash aktiv					
B_clbks	O/V	0... 1H	0 ...1	1	-
External bit value for clearing of fault code memory					
B_ekp	O/V	0... 1H	0 ...1	1	-
Bedingung EKP einschalten					
B_fa	O/V	0... 1H	0 ...1	1	-
Bedingung Funktionsanforderung					
B_fabks	O/V	0... 1H	0 ...1	1	-
Bedingung Funktionsanforderung BKS					
B_frdbks	O/V	0... 1H	0 ...1	1	-
BKS Reglerdiagnose aktiv					
B_fstcanok	O/V	0... 1H	0 ...1	1	-
CAN: Bedingung Tankfuellstands-Message okay					
B_gsch	O/V	0... 1H	0 ...1	1	-
Status Gangwechsel aktiv (CAN) [war:Gbx_bGearShftActv]					
B_hdnd	O/V	0... 1H	0 ...1	1	-
Bedingung Umschaltung auf Niederdruckniveau im LL					
B_hoodopnok	O/V	0... 1H	0 ...1	1	-
Signal fur Motorhaubenschalter okay					
B_hst	O/V	0... 1H	0 ...1	1	-
Bedingung Heißstart					
B_kl15	O/V	0... 1H	0 ...1	1	-
Bedingung Klemme 15 eingeschaltet					
B_kuppl	O/V	0... 1H	0 ...1	1	-
Bedingung Kupplungspedal betätigt					
B_masterhw	O/V	0... 1H	0 ...1	1	-
Bedingung Master-SG gemäss Codier-Pin					
B_mpi	O/V	0... 1H	0 ...1	1	-
Reiner MPI-Betrieb aktiv					
B_msvkma	O/V	0... 1H	0 ...1	1	-
Bedingung Kleinstmengenansteuerung MSV aktiv					
B_nmot	O/V	0... 1H	0 ...1	1	-
engine speed equal or above 32 rpm					
B_rqtbks	O/V	0... 1H	0 ...1	1	-
Bedingung Ansteuerung EKP über Tester					
B_sa	O/V	0... 1H	0 ...1	1	-
1: pull fuel cut off					

Copyright ©Continental AG. Transmittal, reproduction, dissemination and/or editing of this document as well as utilisation of its contents and communication thereof to others without expressed authorisation are prohibited. Offenders will be held liable for payment of damages. All rights created by patent grant or registration of a utility model or design patent are reserved.

Name	Mode	Coded Limits	Display Limits	Resolution	Unit
B_sabte	O/V	0... 1H	0 ...1	1	-
Bedingung Schubabschaltebereitschaft für Tankentlüftungsventil schliessen					
B_stend	O/V	0... 1H	0 ...1	1	-
Bedingung Startende erreicht					
B_stendz	O/V	0... 1H	0 ...1	1	-
Bedingung erstes Startende im Zyklus erreicht					
B_tabstv	O/V	0... 1H	0 ...1	1	-
Gültigkeit der Abstellzeit (B_tabstv=LV_T_ES_VLD)					
B_tal	O/V	0... 1H	0 ...1	1	-
Bedingung Tank leer bzw. Reserve					
B_tfstok	O/V	0... 1H	0 ...1	1	-
CAN: Fuellstandssignal Geber 1 okay					
B_tmmn	O/V	0... 1H	0 ...1	1	-
Bedingung: Blockheater erkannt					
B_tospg	O/V	0... 1H	0 ...1	1	-
Gültigkeit des Signals tosp					
B_tumnpl	O/V	0... 1H	0 ...1	1	-
Bedingung Umgebungstemperatur nicht plausibel					
B_wuc	O/V	0... 1H	0 ...1	1	-
Bedingung warm up cycle erkannt					
dmkrhdev_w	O/V	0... FFFFH	0... 15.624761581e3	0.23841858	g/min
Berechneter Kraftstoffmassenstrom durch HDEV					
dmkrmpi_w	O/V	0... FFFFH	0... 15.624761581e3	0.23841858	g/min
MPI-Kraftstoffmassenstrom					
Dspl_bDrvDoorOpn	O/V	0... 1H	0 ...1	1	-
Bedingung Türkontakt offen über CAN					
Dspl_bHoodOpnNoDeb	O/V	0... 1H	0 ...1	1	-
Motorhaube geoeffnet					
E_ebks	O/V	0... 1H	0 ...1	1	-
BKS-relevante Fehler					
E_edbks	O/V	0... 1H	0 ...1	1	-
Wakeup-relevante Fehler					
E_erdbksy	O/V	0... 1H	0 ...1	1	-
Fehler Niederdrucksensor					
E_tmbkser	O/V	0... 1H	0 ...1	1	-
Eingangschnittstelle für Temperatursensorfehler					
lepwmfan	O/V	0... FFH	0... 99.609375	0.390625	%
PWM-Wert für Lüfteransteuerung					
nmot_w	O/V	0... FFFFH	0... 16383.75	0.25	1/min
Motordrehzahl					
pbkist_w	O/V	0... FFFFH	0... 6553.5	0.1	kPa
Ist-Niederdruck gefiltert					
pksbksr_w	O/V	0... FFFFH	0... 6553.5	0.1	kPa
Niederdruck Rohwert					
prdiff_cw	O/V	8000... 7FFFH	-16.384 ...16.3835	0.0005	MPa
Differenz Hochdruckregler im 2. SG					

Copyright ©Continental AG. Transmittal, reproduction, dissemination and/or editing of this document as well as utilisation of its contents and communication thereof to others without expressed authorisation are prohibited. Offenders will be held liable for payment of damages. All rights created by patent grant or registration of a utility model or design patent are reserved.

Name	Mode	Coded Limits	Display Limits	Resolution	Unit
prdiff_w	O/V	8000... 7FFFH	-16.384 ...16.3835	0.0005	MPa
Differenz Hochdruckregler					
prist_w	O/V	0... FFFFH	0... 32.7675	0.0005	MPa
Gefilterter Raildruck-Istwert (abs.)					
prsoll_cw	O/V	0... FFFFH	0... 32.7675	0.0005	MPa
Sollwert Hochdruckregelung im Slave-SG					
prsoll_w	O/V	0... FFFFH	0... 32.7675	0.0005	MPa
Sollwert Hochdruckregelung					
prsollnd_w	O/V	0... FFFFH	0... 32.7675	0.0005	MPa
Solldruck nach Umschaltung auf Niederdruckniveau					
pu_w	O/V	0... FFFFH	0... 2559.9609375	0.0390625	hPa
Umgebungsdruck					
STATE_EFP_EXT_ACT_REQ	V	0... FFH	0... 255	1	-
Testing routine status for EFP (0x00 short trip not started, 0x10 short trip finished, 0xC0h short trip running)					
tabst_w	O/V	0... FFFFH	0... 65535	1	s
Abstellzeit					
tanhkm_w	O/V	0... FFFFH	-273.156911135 ...1.2526987121e3	0.02328306	°C
Abgastemperatur hinter Hauptkat aus Modell					
tans	O/V	0... FFH	-48... 143.25	0.75	°C
Temperatur Ansaugluft (Sensorwert)					
tfst	O/V	0... FFH	0... 255	1	l
Tankfüllstand					
tka	O/V	0... FFH	-48... 143.25	0.75	°C
Temperatur Motorkühlerausgang (Kühlmittel)					
tmot	O/V	0... FFH	-48... 143.25	0.75	°C
Motor-Temperatur					
tmst	O/V	0... FFH	-48... 143.25	0.75	°C
Motorstarttemperatur					
tnse_w	O/V	0... FFFFH	0... 6553.5	0.1	s
Zeitzähler ab Startende (16bit)					
tnsez_w	O/V	0... FFFFH	0... 6553.5	0.1	s
Zeitzähler ab erstem Startende pro Zyklus (16 bit)					
top_w	O/V	0... FFFFFFFFH	0... 119.30464708e3	27.7778e-6	h
Motorbetriebszeit					
tosp	O/V	0... FFH	-48... 143.25	0.75	°C
Öltemperatur im Ölsumpf - gemessen oder Modellwert					
tumg	O/V	0... FFH	-48... 143.25	0.75	°C
Umgebungstemperatur					
ubsq	O/V	0... FFH	0... 25.5	0.1	V
Bordnetzspannung (umgerechnet in Standardquantisierung)					
vdaavst_w	O/V	8000... 7FFFH	-327.68 ...327.67	0.01	mm3
Volumen Kraftstoff für Druckauf- und -abbau					
vfzg_w	O/V	0... FFFFH	0... 511.9921875	0.0078125	km/h
Fahrzeuggeschwindigkeit					
vgeshdp_w	O/V	0... FFFFH	0... 655.35	0.01	mm3

Copyright ©Continental AG. Transmittal, reproduction, dissemination and/or editing of this document as well as utilisation of its contents and communication thereof to others without expressed authorisation are prohibited. Offenders will be held liable for payment of damages. All rights created by patent grant or registration of a utility model or design patent are reserved.

Name	Mode	Coded Limits	Display Limits	Resolution	Unit
Gesamtvolumen Kraftstoff für Kompression in der HDP					
vrhdr_w	O/V	8000... 7FFFH	-327.68 ...327.67	0.01	mm3
Volumen Regleranteil HDR					

Input Data

AMP {p. 13840}	B_ktaabks {p. 11911}	B_zadbks {p. 11918}	ECFPWM_1 {p. 8845}
ECFPWM_2 {p. 8845}	EFPPWM_EXT_ADJ {p. 12123}	FTL_CAN {p. 19448}	FUEL_MASS_REQ_CTL {p. 11965}
FUEL_MASS_REQ_P_CTL {p. 11965}	FUP {p. 11886}	FUP_DIF {p. 11965}	FUP_EFP {p. 11905}
FUP_EFP_MES {p. 11905}	FUP_SP {p. 11952}	IDX_CMB_MOD_INJ_MOD {p. 1813}	LV_CAN_HOOD_SWI {p. 19086}
LV_CDN_DIAG_FUP_EFP_CTL {p. 12227}	LV_CLU_SWI {p. 25932}	LV_CRASH {p. 23896}	LV_DRIV_DOOR_OPEN {p. 18983}
LV_EFPPWM_EXT_ADJ {p. 12123}	LV_ENG_OFF_N_CON {p. 3061}	LV_ERR_WKUL_ICH {p. 23183}	LV_ES {p. 7530}
LV_FRS {p. 12296}	LV_FRS_ERR_CAN {p. 14320}	LV_FUP_LIH_L_PRS_CTL_REQ {p. 12184}	LV_GS_ACT {p. 25947}
LV_IGK {p. 24082}	LV_MFP_REQ_LOW {p. 11983}	LV_PIN_ICH {p. 19357}	LV_PUC {p. 7530}
LV_ST_END {p. 7530}	LV_ST_END_CYC {p. 7497}	LV_T_ES_VLD {p. 8333}	LV_VAR_HYB {p. 23190}
LV_VAR_ICH {p. 24740}	LV_VAR_STST {p. 24741}	LV_WUP_CYC {p. 9729}	MFF_SP_EFP_CTL {p. 11463}
MFF_SP_FUP_CTL {p. 11463}	N {p. 8079}	NC_IDX_SUM_MPI {p. 1666}	NC_SENS_NR_TIA {p. 1144}
NLC_EFP_PROD_FEAT_ON {p. 12102}	T_AST {p. 8436}	T_AST_DC {p. 8436}	T_ES_H {p. 8334}
TAM {p. 1143}	TCO {p. 8846}	TCO_2 {p. 8846}	TCO_ST {p. 8846}
TEG_DYN_DOWN_CAT [NC_CBK_EX_NR] {p. 11328}	TFU_HPP {p. 11817}	TIA_MES [NC_SENS_NR_TIA] {p. 1143}	TOIL {p. 7287}
TRT {p. 5868}	VB {p. 24055}	VS_HIGH_RES {p. 26402}	

Calibration Data

Name	Mode	Coded Limits	Display Limits	Resolution	Unit
C_FAC_ECFPWM_TFU_EFP	V	0... FFFFH	0... 0.999984741211	15.2588e-6	-
Cross-fading factor used to define the impact of electronic cooling fan 1 and 2 on fuel temperature in low pressure system					
C_SEL_TIA_MES_TFU_EFP	V	0... 4H	0 ...4	1	-
Selection of intake air raw measured value used for fuel temperature in low pressure system (0 - average value of all TIA sensors, 1-TIA1, 2-TIA2, etc.)					
C_T_AST_EFP_HST	V	0... FFFFH	0... 6553.5	0.1	s

Copyright ©Continental AG. Transmittal, reproduction, dissemination and/or editing of this document as well as utilisation of its contents and communication thereof to others without expressed authorisation are prohibited. Offenders will be held liable for payment of damages. All rights created by patent grant or registration of a utility model or design patent are reserved.

Name	Mode	Coded Limits	Display Limits	Resolution	Unit
Maximum time after start before end of hotstart phase					
C_TCO_ST_EFP_HST	V	0... FEH	-48... 142.5	0.75	°C
Minimum coolant temperature for hotstart detection					
C_TIA_MES_TFU_EFP_DFT	V	0... FEH	-48... 142.5	0.75	°C
Default value of intake air raw measured value used for fuel temperature in low pressure system in case no intake air sensor is configured					
IP_RHO_FUEL	V	153B... FFFFH	74.63950560769 ...900	0.01373312	mg/ cm**3
LDP_TFU_HPP_IP_RHO_FUEL	4	0... FEH	-48... 142.5	0.75	°C
Map defining the fuel density as a function of fuel temperature					

Configuration Data

Name	Mode	Coded Limits	Display Limits	Resolution	Unit
BKS_SY	O/V	0... 2H	0 ...2	1	-
0=gesteuertes System (Adaption ohne Sensor über Wobbeln) 1=geregeltes System (Adaption über ND-Sensor und PID-Regler) 2=Auswahl der Adaption über CWBKS4.Bit0 (false=Wobbeladap					
NC_FID_EFP_ERR_FTL	V	0... FFFFH	0... 65535	1	-
Fuel tank level information received by CAN is reliable					
NC_FID_EFP_ERR_HPP	V	0... FFFFH	0... 65535	1	-
FARM function identifier of EFP for high pressure system related errors					
NC_FID_EFP_ERR_IMOB	V	0... FFFFH	0... 65535	1	-
FARM function identifier of EFP for immobilizer related errors					
NC_FID_EFP_ERR_SENS	V	0... FFFFH	0... 65535	1	-
FARM function identifier of EFP for low pressure sensors related errors					
NC_FID_EFP_ERR_TAM	V	0... FFFFH	0... 65535	1	-
FARM function identifier of EFP for TAM related errors					
NC_FID_EFP_ERR_WKU	V	0... FFFFH	0... 65535	1	-
FARM function identifier of EFP for wake up related errors					
NC_FID_EFP_HOOD_SWI_VLD	-	0... FFH	0... 255	1	-
Hood signal is valid					
NC_FID_TFU_CUS	V	0... FFFFH	0... 65535	1	-
FARM function identifier for TFU determination in customer provided model					
SY_HEV	O/V	0... 1H	0 ...1	1	-
Systemkonstante für Hybrid-Programmstand					
SY_SGANZ	O/V	0... 2H	0 ...2	1	-
Systemkonstante Anzahl MSG					
SY_STASTO	O/V	0... 1H	0 ...1	1	-
Systemkonstante für Start/Stopp					

Action Definitions

Copyright ©Continental AG. Transmittal, reproduction, dissemination and/or editing of this document as well as utilisation of its contents and communication thereof to others without expressed authorisation are prohibited. Offenders will be held liable for payment of damages. All rights created by patent grant or registration of a utility model or design patent are reserved.

ACTION_FUSL_FupEfpAdExtReq(IN <PRM_LV_FUP_EFP_AD_EXT_REQ>)					**Mode: O**
Service tool request to start testing routine					
Parameter	**Type**	**Hex.Limits**	**Phys.Limits**	**Resol.**	**Unit**
PRM_LV_FUP_EFP_AD_EXT_REQ	in	0... 1H	0 ...1	1	-
External request to activate electric fuel pump					

ACTION_FUSL_GetFupEfpAdState(OUT <PRM_SRV_31_ROUTINE_STATE>)					**Mode: O**
Status of electrical fuel pump testing routine					
Parameter	**Type**	**Hex.Limits**	**Phys.Limits**	**Resol.**	**Unit**
PRM_SRV_31_ROUTINE_STATE	out	0... FFH	0... 255	1	-
Testing routine status for EFP (0x00 short trip not started, 0x10 short trip finished, 0xC0h short trip running)					

▶ Import actions:

ACTION_FARM_GetPermission(IN <PRM_FID>, **OUT** <PRM_LV_PRMS>)

▶ General Information

43.11.1 10ms task

▶ General Information

▶ Application Conditions

Initialisation:

```
on RST or IGKON:
BKS_SY    = 2
SY_HEV    = LV_VAR_HYB
SY_SGANZ  = 1
SY_STASTO = LV_VAR_STST
Additionally calculate the complete formula section.
```

Activation: always

Deactivation: never

Recurrence: 10ms

▶ Function Description

```
B_mpi = (IDX_CMB_MOD_INJ_MOD == NC_IDX_SUM_MPI)

lepwmfan  = (1 - C_FAC_ECFPWM_TFU_EFP) * ECFPWM_1 + ...
            C_FAC_ECFPWM_TFU_EFP * ECFPWM_2
```

Copyright ©Continental AG. Transmittal, reproduction, dissemination and/or editing of this document as well as utilisation of its contents and communication thereof to others without expressed authorisation are prohibited. Offenders will be held liable for payment of damages. All rights created by patent grant or registration of a utility model or design patent are reserved.

43.11.2 20ms task

▶ General Information

▶ Application Conditions

Initialisation:	on RST or IGKON: Calculate the complete formula section.
Activation:	always
Deactivation:	never
Recurrence:	20MS

▶ Function Description

```
arqtbks_w          = EFPPWM_EXT_ADJ
AuxHtg_bFlPmpReq = LV_PIN_ICH AND LV_VAR_ICH AND !LV_ERR_WKUL_ICH
B_airbag           = {LV_CRASH OR LV_ENG_OFF_N_CON OR
not[ACTION_FARM_GetPermission(NC_FID_EFP_ERR_IMOB)]}

B_ekp              = !LV_ES
B_frdbks           = LV_CDN_DIAG_FUP_EFP_CTL
B_fstcanok         = ACTION_FARM_GetPermission(NC_FID_EFP_ERR_FTL)
B_gsch             = LV_GS_ACT
B_hdnd             = 0
B_kl15             = LV_IGK
B_kuppl            = LV_CLU_SWI
B_masterhw         = 1
B_msvkma           = LV_MFP_REQ_LOW
B_nmot             = !LV_ES
B_rqtbks           = LV_EFPPWM_EXT_ADJ
B_sa               = LV_PUC
B_sabte            = LV_PUC
B_stend            = LV_ST_END
B_stendz           = LV_ST_END_CYC
B_tal              = LV_FRS
B_tfstok           = !LV_FRS_ERR_CAN
dmkrhdev_w         = (1/500) * N * MFF_SP_FUP_CTL
dmkrmpi_w          = (1/500) * N * (MFF_SP_EFP_CTL - MFF_SP_FUP_CTL)
E_erdbksy          = not(ACTION_FARM_GetPermission(NC_FID_EFP_ERR_SENS))
nmot_w             = N
pbkist_w           = FUP_EFP
pksbksr_w          = FUP_EFP_MES
prdiff_cw          = 0
prdiff_w           = FUP_DIF
prist_w            = FUP
prsoll_cw          = 0
prsoll_w           = FUP_SP
prsollnd_w         = 0
pu_w               = AMP
tfst               = FTL_CAN
tmot               = TCO
tmst               = TCO_ST
tnse_w             = T_AST
ubsq               = VB
vdaavst_w          = 1000 * FUEL_MASS_REQ_P_CTL / IP_RHO_FUEL(TFU_HPP)
vfzg_w             = VS_HIGH_RES
vgeshdp_w = 1000 * (MFF_SP_FUP_CTL + FUEL_MASS_REQ_CTL) / IP_RHO_FUEL(TFU_HPP)
vrhdr_w   = 1000 * FUEL_MASS_REQ_CTL / IP_RHO_FUEL(TFU_HPP)

#If  NLC_EFP_PROD_FEAT_ON  then
 top_w = TRT /* total engine running time
 B_hoodopnok = Action_FARM_GetPermission(NC_FID_EFP_HOOD_SWI_VLD)
 */ hood signal is valid and plausible
 Dspl_bHoodOpnNoDeb = LV_CAN_HOOD_SWI /* hood is opened
■ EndIf
```

Copyright ©Continental AG. Transmittal, reproduction, dissemination and/or editing of this document as well as utilisation of its contents and communication thereof to others without expressed authorisation are prohibited. Offenders will be held liable for payment of damages. All rights created by patent grant or registration of a utility model or design patent are reserved.

43.11.3 100ms task

▶ General Information

▶ Application Conditions

Initialisation:	on RST or IGKON: Calculate the complete formula section.
Activation:	always
Deactivation:	never
Recurrence:	100MS

▶ Function Description

```
B_clbks           = 1
B_hst             = (TCO_ST>C_TCO_ST_EFP_HST) AND (T_AST<C_T_AST_EFP_HST)
B_tmmn            = 0
B_tospg           = 1
B_tumnpl          = ACTION_FARM_GetPermission(NC_FID_EFP_ERR_TAM)
B_wuc             = LV_WUP_CYC
Dspl_bDrvDoorOpn  = LV_DRIV_DOOR_OPEN
E_ebks            = (not(ACTION_FARM_GetPermission(NC_FID_EFP_ERR_HPP)) ...
                 OR LV_FUP_LIH_L_PRS_CTL_REQ)

E_edbks           = not(ACTION_FARM_GetPermission(NC_FID_EFP_ERR_WKU))
E_tmbkser         = not(ACTION_FARM_GetPermission(NC_FID_TFU_CUS))
tabst_w           = T_ES_H
tanhkm_w          = TEG_DYN_DOWN_CAT[0]

if(a)  NC_SENS_NR_TIA > 0
//NC_SENS_NR_TIA=0 for configurations with no TIA sensor available

then(a)
   if(b)  C_SEL_TIA_MES_TFU_EFP=0
      then(b)
         tans = 0°C
         for i = 1 to NC_SENS_NR_TIA
            tans = tans + (TIA_MES[i]/NC_SENS_NR_TIA)
         next i
      else(b)
         tans = TIA_MES[min(NC_SENS_NR_TIA, C_SEL_TIA_MES_TFU_EFP)
   endif(b)
else(a)
   tans = C_TIA_MES_TFU_EFP_DFT
endif(a)

tka               = TCO_2
tnsez_w           = T_AST_DC
tosp              = TOIL
tumg              = TAM
B_tabstv = LV_T_ES_VLD

if  B_zadbks_{n-1}=0 AND B_zadbks_n=1 // rising edge
then
// reset service tool short trip requests
  B_fa = 0
  B_fabks =0
end if
```

Copyright©Continental AG. Transmittal, reproduction, dissemination and/or editing of this document as well as utilisation of its contents and communication thereof to others without expressed authorisation are prohibited. Offenders will be held liable for payment of damages. All rights created by patent grant or registration of a utility model or design patent are reserved.

43.11.4 Service Tool

▶ General Information

The following actions will support the communication with the Service Tool in order to start the so called short trip testing routine. Testing routine is allowed to run several times in the same driving cycle without ECU power off.

▶ Application Conditions

Initialisation:	–
Activation:	`always`
Deactivation:	`never`
Recurrence:	`on Action call`

▶ Function Description

```
ACTION_FUSL_FupEfpAdExtReq(IN <PRM_LV_FUP_EFP_AD_EXT_REQ>)

        B_fa    = 1 // t ester request active
        B_fabks = 1 //  short trip request from tester

End ACTION

ACTION_FUSL_GetFupEfpAdState(OUT <PRM_SRV_31_ROUTINE_STATE>)
if(a) B_zadbks == 1
 then(a)
  // short trip finished
  PRM_SRV_31_ROUTINE_STATE = 10h
 else(a)
  if(b) B_ktaabks == 1
  then(b)
   // short trip running
   PRM_SRV_31_ROUTINE_STATE = C0h
  else(b)
   // short trip not started
   PRM_SRV_31_ROUTINE_STATE = 00h
  end if(b)
end if(a)
STATE_EFP_EXT_REQ = PRM_SRV_31_ROUTINE_STATE;
End ACTION
```

Copyright ©Continental AG. Transmittal, reproduction, dissemination and/or editing of this document as well as utilisation of its contents and communication thereof to others without expressed authorisation are prohibited. Offenders will be held liable for payment of damages. All rights created by patent grant or registration of a utility model or design patent are reserved.

43.12 Fuel pressure setpoint calculation

Data Definition

Name	Mode	Coded Limits	Display Limits	Resolution	Unit
FUP_SP	O/V	0... FFFFH	0... 347776	5.3067216	hPa
Fuel pressure setpoint					
FUP_SP_GRD	O/V	8000... 7FFFH	-173890 ...173884	5.30669108	hPa
Gradient of the fuel pressure setpoint					
FUP_SP_GRD_SEG	O/V	8000... 7FFFH	-173890 ...173884	5.30669108	hPa
Fuel pressure setpoint gradient between two segments					
FUP_SP_LIM	V	0... FFFFH	0... 347776	5.3067216	hPa
Fuel pressure setpoint after static limitation					
FUP_SP_LIM_DEC	V	0... FFFFH	0... 347776	5.3067216	hPa
Decrement value for fuel pressure setpoint gradient limitation					
FUP_SP_LIM_INC	V	0... FFFFH	0... 347776	5.3067216	hPa
Increment value for fuel pressure setpoint gradient limitation					
FUP_SP_MAX	V	0... FFFFH	0... 347776	5.3067216	hPa
Maximum admissible fuel pressure setpoint					
FUP_SP_TMP	V	0... FFFFH	0... 347776	5.3067216	hPa
Fuel pressure setpoint (before limitation)					
IDX_FUP_SP_SEL_CMB_MOD	V	1... FFH	1... 255	1	-
Index for selection of appropriate instance from set of basic fuel pressure setpoint interpolation tables					
LV_FUP_SP_GRD_ACT	V	0... 1H	0 ...1	1	-
Logical indicator for gradient limitation out of start active					
LV_FUP_SP_L_PRS_ST_REQ	V	0... 1H	0 ...1	1	-
Request for fuel pressure setpoint during low pressure start					
LV_FUP_SP_MPI_INJ_REQ	V	0... 1H	0 ...1	1	-
Request for fuel pressure setpoint during MPI phase					

Input Data

FUP {p. 11886}	FUP_SP_CRCV {p. 1877}	FUP_SP_EXT {p. 11962}	IDX_CMB_MOD_CUR {p. 1721}
IDX_CMB_MOD_INJ_MOD {p. 1813}	IDX_CMB_MOD_ST {p. 1813}	LF_STATE_IV_PREV [NC_NR_BYTE_INJ] {p. 12984}	LF_TI_MIN [NC_NR_INJ_CMB] {p. 13218}
LV_ES {p. 7530}	LV_FUP_LIH_H_PRS_CTL_REQ {p. 12184}	LV_FUP_LIH_L_PRS_CTL_REQ {p. 12184}	LV_FUP_SP_EXT_REQ {p. 11962}
LV_FUP_SP_REQ_CRCV {p. 1877}	LV_IGK {p. 24082}	LV_PU {p. 7530}	LV_PUC {p. 7530}
LV_ST_END {p. 7530}	LV_STST_STOP_REQ {p. 8458}	LV_VCV_CLOSE_SL_AD_WAIT {p. 11983}	MAF {p. 3012}
MFF_SP_FUP_SP {p. 11463}	N_32 {p. 8079}	NC_IDX_SUM_L_PRS_ST_MPL {p. 1666}	NC_IDX_SUM_L_PRS_ST_SNG {p. 1666}
NC_IDX_SUM_MPI {p. 1666}	NC_NR_BYTE_INJ {p. 12908}	NC_NR_CMB_MOD {p. 1667}	NC_NR_INJ_CMB {p. 12909}
NC_NR_IP_FUP_SP_BAS {p. 11813}	NC_NR_MAF_FUP_SP {p. 11813}	NC_NR_N_FUP_SP {p. 11813}	STATE_VVL_MNG {p. 26510}

Copyright ©Continental AG. Transmittal, reproduction, dissemination and/or editing of this document as well as utilisation of its contents and communication thereof to others without expressed authorisation are prohibited. Offenders will be held liable for payment of damages. All rights created by patent grant or registration of a utility model or design patent are reserved.

TCO {p. 8846}	TCO_ST {p. 8846}	TFU {p. 11817}	

Calibration Data

Name	Mode	Coded Limits	Display Limits	Resolution	Unit
C_CRLC_FUP_SP_GRD	V	0... FFH	0... 0.99609375	0.00390625	-
Correletion factor to determine the fuel pressure setpoint gradient					
C_CRLC_FUP_SP_GRD_SEG	V	0... FFH	0... 0.99609375	0.00390625	-
Correletion factor to determine the fuel pressure setpoint gradient calculated in one segment					
C_CTR_FUP_SP_VVL_LGRD	V	0... FFH	0... 255	1	-
Counter for fuel pressure setpoint gradient limitation after switching of VVL					
C_FUP_SP_L_PRS_ST	V	0... FFFFH	0... 347776	5.3067216	hPa
Fuel pressure setpoint for low pressure start					
C_FUP_SP_LIH_H_PRS_CTL	V	0... FFFFH	0... 347776	5.3067216	hPa
Fuel pressure setpoint to be applied in case of high pressure limphome request					
C_FUP_SP_LIH_L_PRS_CTL	V	0... FFFFH	0... 347776	5.3067216	hPa
Fuel pressure setpoint to be applied in case of low pressure limphome request					
C_FUP_SP_MAN	V	0... FFFFH	0... 347776	5.3067216	hPa
Manual fuel pressure setpoint					
C_FUP_SP_MIN	V	0... FFFFH	0... 347776	5.3067216	hPa
Fuel setpoint minimum					
C_FUP_SP_PU_LIM_DEC	V	0... FFFFH	0... 347776	5.3067216	hPa
Gradient limitation for fuel pressure setpoint decrement during PU/PUC					
C_FUP_SP_PU_LIM_INC	V	0... FFFFH	0... 347776	5.3067216	hPa
Gradient limitation for fuel pressure setpoint increment during PU/PUC					
C_FUP_SP_PUC	V	0... FFFFH	0... 347776	5.3067216	hPa
Fuel pressure setpoint in PUC					
C_FUP_SP_ST_LGRD_DEC	V	0... FFFFH	0... 347776	5.3067216	hPa
Gradient limitation for fuel pressure setpoint decrement out of start					
C_FUP_SP_ST_LGRD_INC	V	0... FFFFH	0... 347776	5.3067216	hPa
Gradient limitation for fuel pressure setpoint increment till st end					
C_FUP_SP_STST	V	0... FFFFH	0... 347776	5.3067216	hPa
Fuel pressure setpoint for fast pressure build-up during engine stop-start cycle					
C_FUP_SP_STST_LGRD	V	0... FFFFH	0... 347776	5.3067216	hPa
Gradient limitation for fuel pressure setpoint during engine stop-start cycle					
C_FUP_SP_VCV_SL_LGRD	V	0... FFFFH	0... 347776	5.3067216	hPa
Gradient limitation for fuel pressure setpoint increment and decrement during VCV soft landing adaptation					
C_FUP_SP_VVL_LGRD	V	0... FFFFH	0... 347776	5.3067216	hPa
Gradient limitation for fuel pressure setpoint increment and decrement after switching of VVL					
ID_FUP_SP_SEL_CMB_MOD	V	1... FFH	1... 255	1	-
LDPM_IDX_CMB_MOD_1_CBMD	NC_NR_CMB_MOD	0... FFH	0... 255	1	-
LDP_TCO_CMB_MOD_1_CMBD	2	0... FEH	-48... 142.5	0.75	°C
Index table for selection of appropriate instance from set of basic fuel pressure setpoint interpolation tables, based on currently requested combustion mode					

Copyright ©Continental AG. Transmittal, reproduction, dissemination and/or editing of this document as well as utilisation of its contents and communication thereof to others without expressed authorisation are prohibited. Offenders will be held liable for payment of damages. All rights created by patent grant or registration of a utility model or design patent are reserved.

Name	Mode	Coded Limits	Display Limits	Resolution	Unit
IP_FAC_FUP_SP_LIM	V	0... FFH	0... 7.96875	0.03125	-
LDP_N_32_IP_FAC_FUP_SP_LIM	6	0... FFH	0... 8160	32	rpm
Factor to correct the thresholds for the setpoint change limitation dependent on the engine speed					
IP_FUP_SP_BAS_SEL [NC_NR_IP_FUP_SP_BAS]	V	0... FFFFH	0... 347776	5.3067216	hPa
LDPM_N_32_2_FUSL	NC_NR_N_FUP_SP	0... FFH	0... 8160	32	rpm
LDPM_MAF_2_FUSL	NC_NR_MAF_FUP_SP	0... FFFFH	0... 1389	0.02119478	mg/stk
Set of interpolation tables for determination of basic fuel pressure setpoint					
IP_FUP_SP_LIM_DEC	V	0... FFFFH	0... 347776	5.3067216	hPa
LDP_MFF_SP_IP_FUP_SP_LIM_DEC	4	0... FFFFH	0... 1389	0.02119478	mg/stk
Gradient limitation for fuel pressure setpoint decrement during normal operation depending on mass fuel flow setpoint					
IP_FUP_SP_LIM_INC	V	0... FFFFH	0... 347776	5.3067216	hPa
LDP_MFF_SP_IP_FUP_SP_LIM_INC	4	0... FFFFH	0... 1389	0.02119478	mg/stk
Gradient limitation for fuel pressure setpoint increment during normal operation depnding on mass fuel flow setpoint					
IP_FUP_SP_MAX	V	0... FFFFH	0... 347776	5.3067216	hPa
LDP_TFU_IP_FUP_SP_MAX	8	0... FEH	-48... 142.5	0.75	°C
Fuel pressure setpoint limitation based on TCO					
IP_FUP_SP_PU	V	0... FFFFH	0... 347776	5.3067216	hPa
LDPM_N_32_2_FUSL	NC_NR_N_FUP_SP	0... FFH	0... 8160	32	rpm
LDPM_MAF_FUP_CTL_1_FUSL	NC_NR_MAF_FUP_SP	0... FFFFH	0... 1389	0.02119478	mg/stk
Fuel pressure setpoint for PU and PUC engine operation					
IP_FUP_SP_ST_NO_INJ	V	0... FFFFH	0... 347776	5.3067216	hPa
LDPM_TCO_ST_1_FUSL	6	0... FEH	-48... 142.5	0.75	°C
Fuel pressure setpoint during engine start prior to start of injection					
LC_FUP_ACT_FUP_SP_PUC	V	0... 1H	0 ...1	1	-
Switch for activating FUP assignment during PUC / MPI phase to fuel pressure setpoint					
LC_FUP_SP_LIM_TI_MIN	V	0... 1H	0 ...1	1	-
Activation switch for dynamic maximum limitation of fuel pressure setpoint once TI_MIN has been reached					
LC_FUP_SP_MAN_ACT	V	0... 1H	0 ...1	1	-
Switch for manual fuel pressure setpoint					
LC_FUP_SP_PU_ACT	V	0... 1H	0 ...1	1	-
Activation switch for application of specific fuel pressure setpoint during engine PU operation					
LC_FUP_SP_SEL_MFL	V	0... 1H	0 ...1	1	-
Defines, if mass air flow (= 0) or mass fuel flow (= 1) is selected to calculate the fuel pressure setpoint					
LC_FUP_SP_ST_NO_INJ	V	0... 1H	0 ...1	1	-
Switch for activation of separate fuel pressure setpoint during engine start prior to start of injection					

Copyright ©Continental AG. Transmittal, reproduction, dissemination and/or editing of this document as well as utilisation of its contents and communication thereof to others without expressed authorisation are prohibited. Offenders will be held liable for payment of damages. All rights created by patent grant or registration of a utility model or design patent are reserved.

▶ General Information

This module describes the setpoint calculation for the high pressure direct injection fuel supply system.

Basic fuel pressure setpoint is determined depending on engine operating state.
Static and dynamic limitations are applied.
Specific setpoints for limphome operation are considered.

▶ Application Conditions

Initialisation:	`RST`
Activation:	`always`
Deactivation:	`never`
Recurrence:	`10MS, SEG`

▶ Function Description

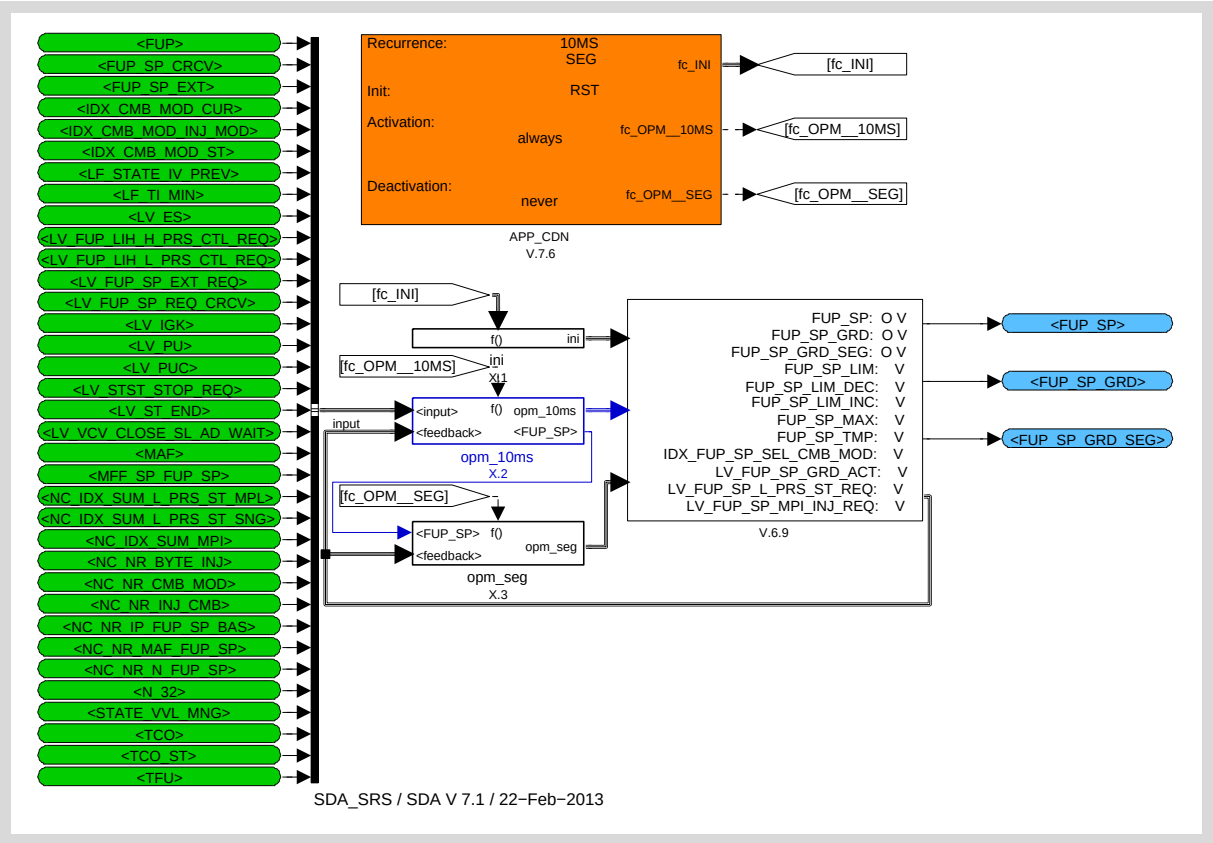

Figure 43.12.1:

Copyright ©Continental AG. Transmittal, reproduction, dissemination and/or editing of this document as well as utilisation of its contents and communication thereof to others without expressed authorisation are prohibited. Offenders will be held liable for payment of damages. All rights created by patent grant or registration of a utility model or design patent are reserved.

43.12.1 Initialization function

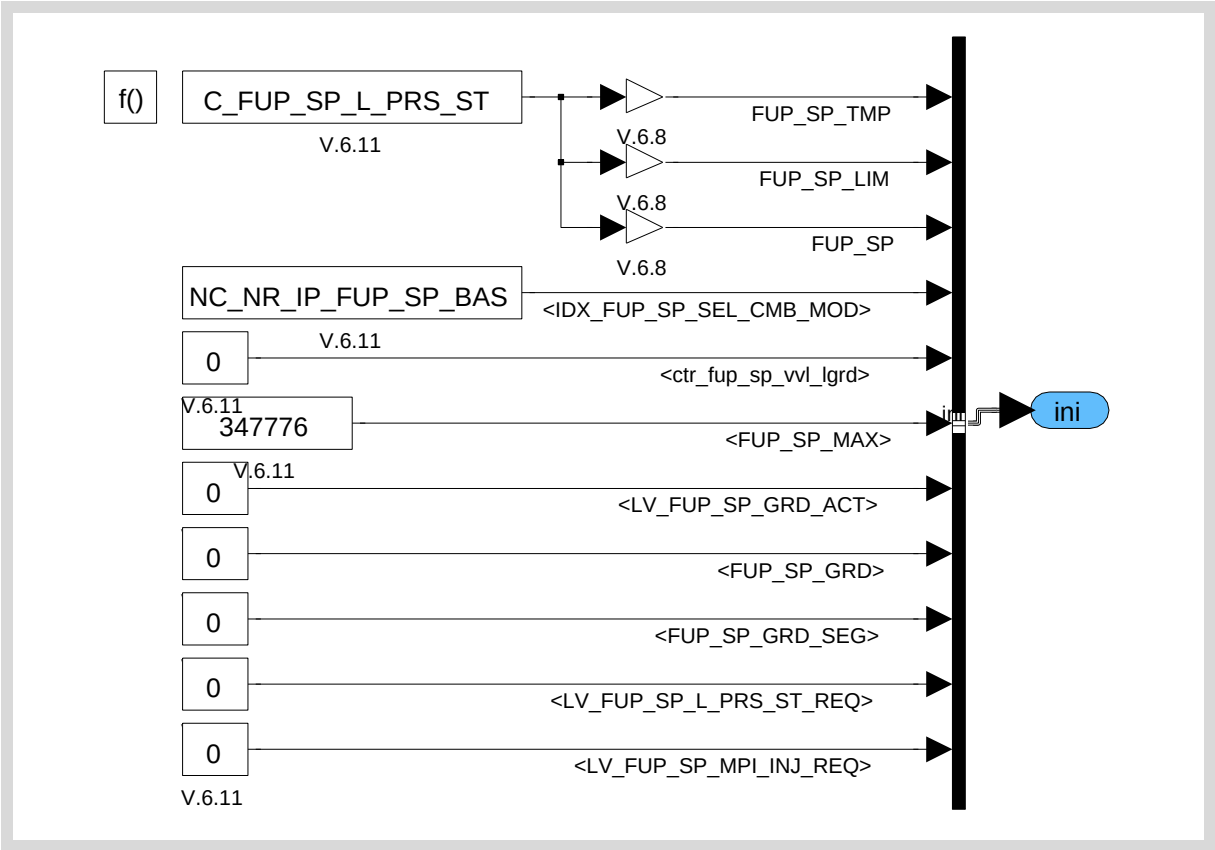

Figure 43.12.2:

43.12.2 Function for calculation of fuel pressure setpoint

43.12.2.1 Evaluation of requests for exclusive MPI and low pressure start operation

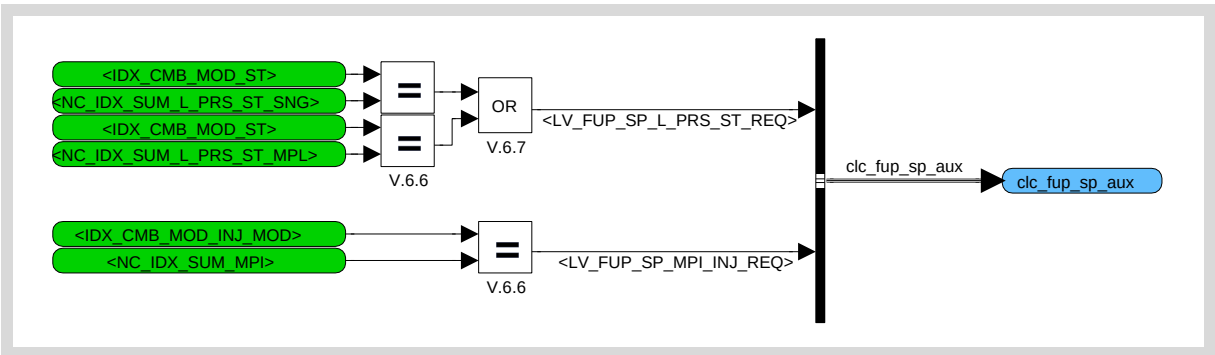

Figure 43.12.3:

Copyright ©Continental AG. Transmittal, reproduction, dissemination and/or editing of this document as well as utilisation of its contents and communication thereof to others without expressed authorisation are prohibited. Offenders will be held liable for payment of damages. All rights created by patent grant or registration of a utility model or design patent are reserved.

43.12.2.2 Calculation of basic fuel pressure setpoint

Basic setpoint is determined based on engine operating states and / or combustion states.

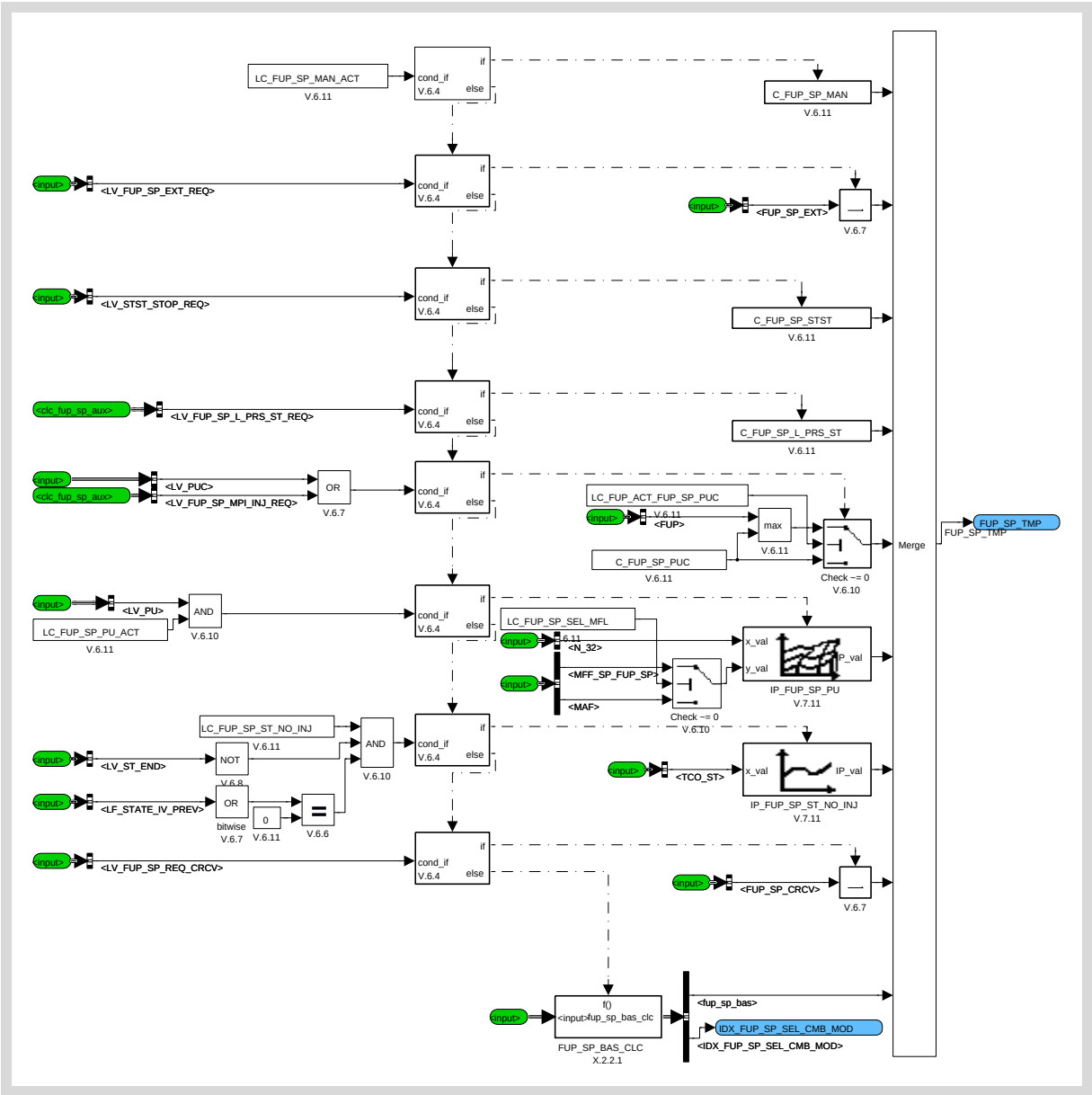

Figure 43.12.4:

Copyright ©Continental AG. Transmittal, reproduction, dissemination and/or editing of this document as well as utilisation of its contents and communication thereof to others without expressed authorisation are prohibited. Offenders will be held liable for payment of damages. All rights created by patent grant or registration of a utility model or design patent are reserved.

43.12.2.2.1 Selection of basic fuel pressure setpoint based on current combustion mode

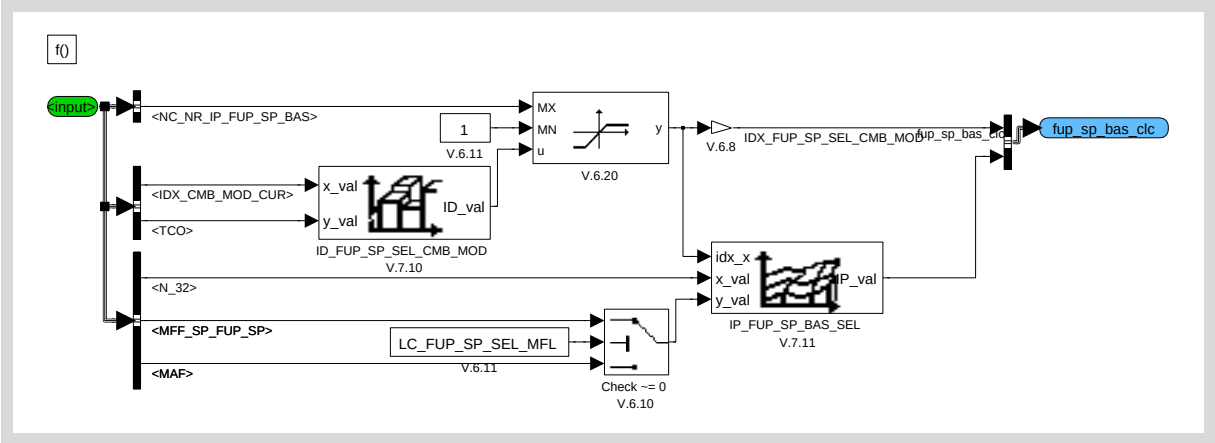

Figure 43.12.5:

43.12.2.3 Fuel pressure setpoint limitation functions

This chapter is split in gradient limitation, and absolute limitation of the basic fuel pressure setpoint, respectively.
The fuel supply system limp-home request is considered at the end of the calculation chain.

Copyright ©Continental AG. Transmittal, reproduction, dissemination and/or editing of this document as well as utilisation of its contents and communication thereof to others without expressed authorisation are prohibited. Offenders will be held liable for payment of damages. All rights created by patent grant or registration of a utility model or design patent are reserved.

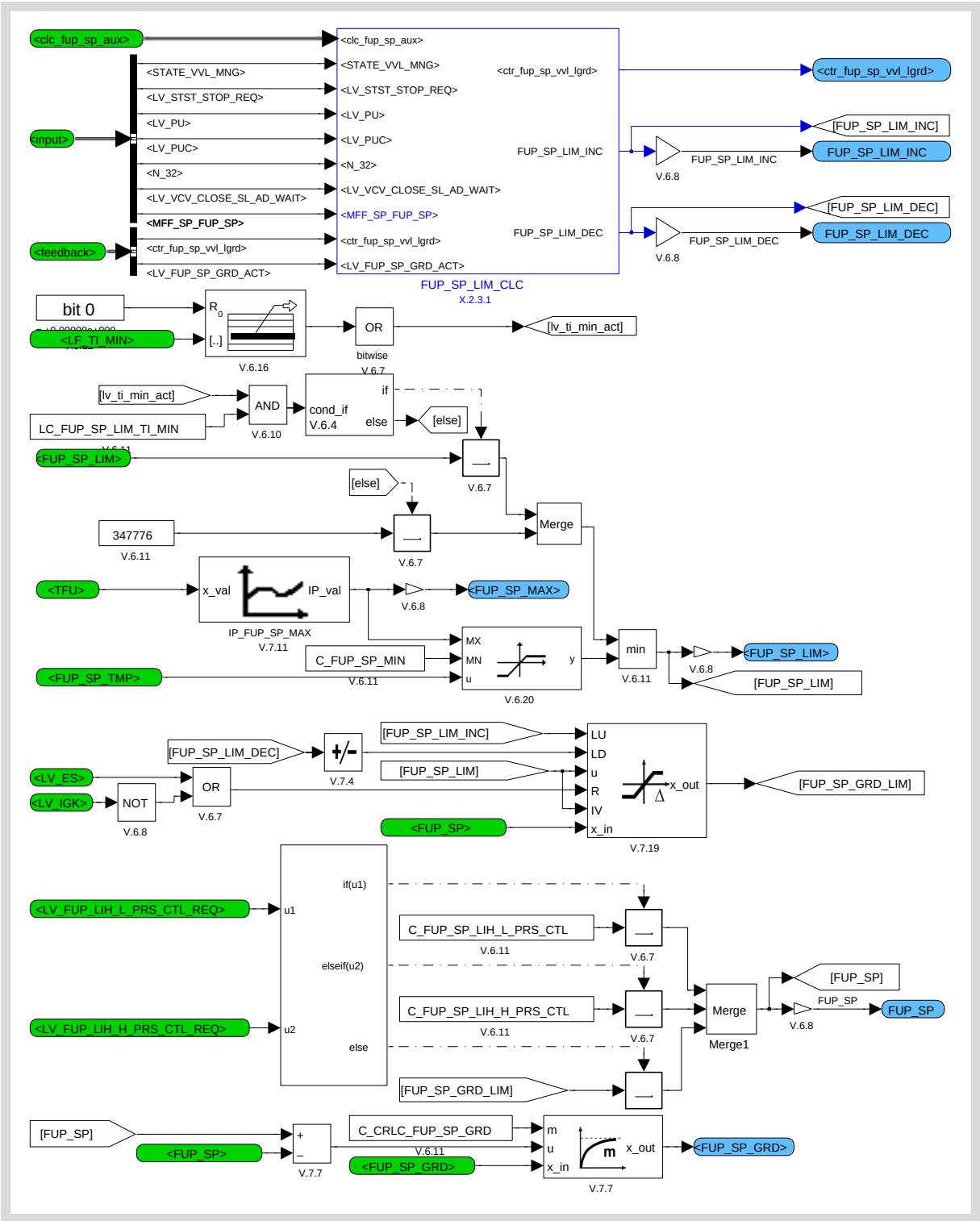

Figure 43.12.6:

Copyright ©Continental AG. Transmittal, reproduction, dissemination and/or editing of this document as well as utilisation of its contents and communication thereof to others without expressed authorisation are prohibited. Offenders will be held liable for payment of damages. All rights created by patent grant or registration of a utility model or design patent are reserved.

43.12.2.3.1 Calculation of thresholds for gradient limitation

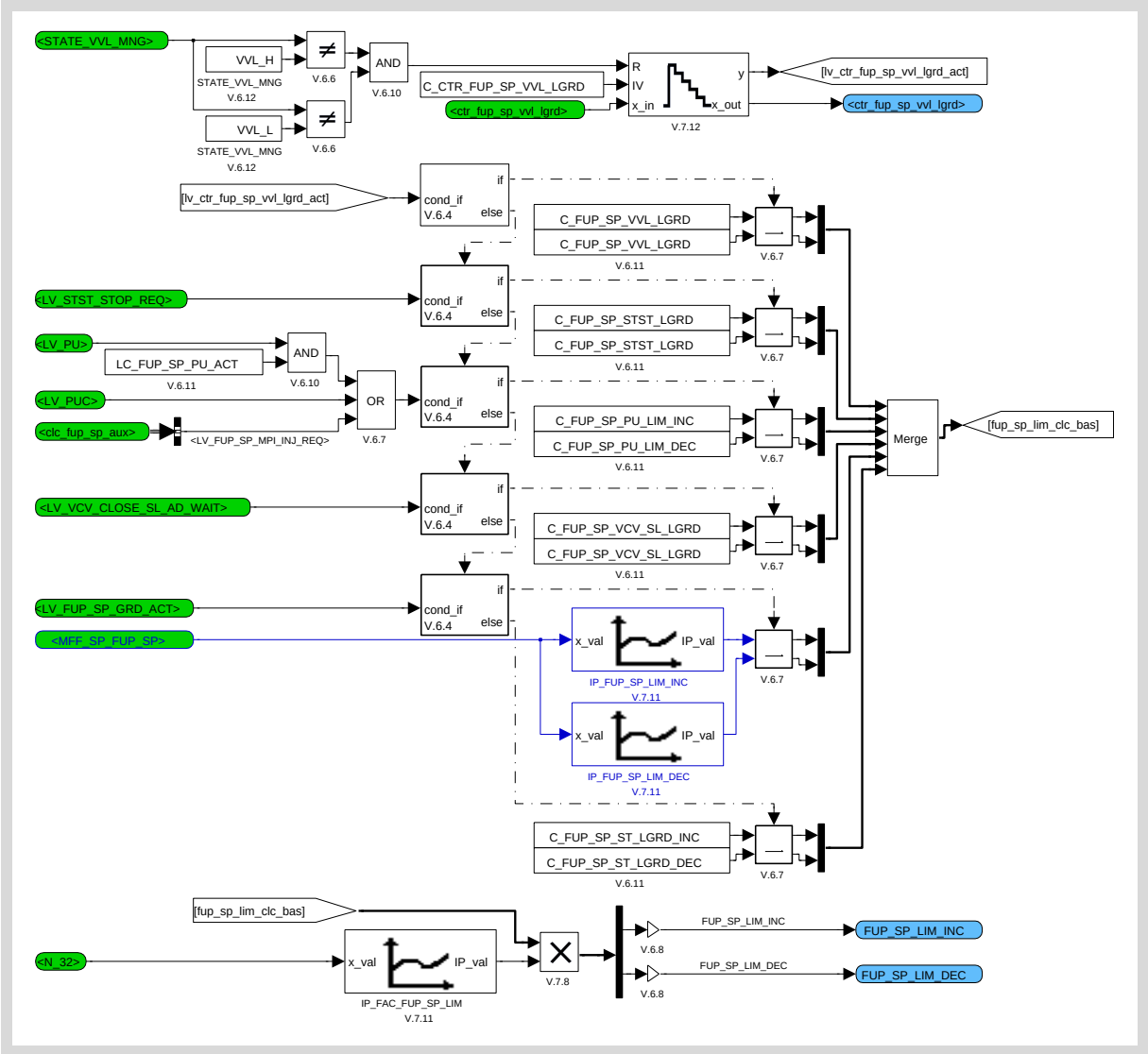

Figure 43.12.7:

Copyright ©Continental AG. Transmittal, reproduction, dissemination and/or editing of this document as well as utilisation of its contents and communication thereof to others without expressed authorisation are prohibited. Offenders will be held liable for payment of damages. All rights created by patent grant or registration of a utility model or design patent are reserved.

43.12.2.4 Switching of gradient limitation after engine start

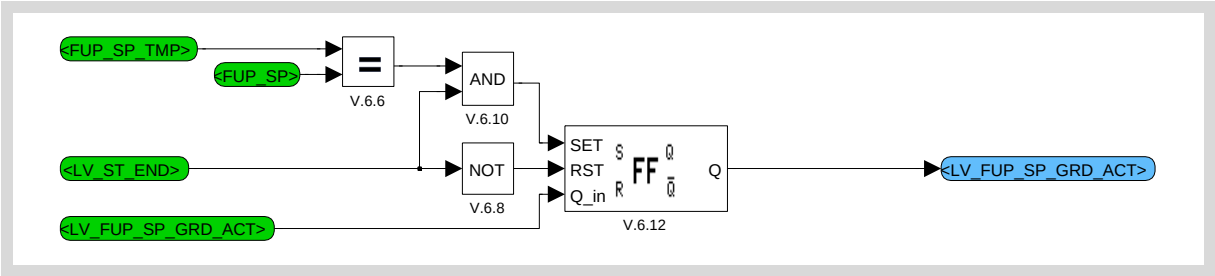

Figure 43.12.8:

43.12.3 Segment synchronous calculation of fuel pressure setpoint gradient

Copyright ©Continental AG. Transmittal, reproduction, dissemination and/or editing of this document as well as utilisation of its contents and communication thereof to others without expressed authorisation are prohibited. Offenders will be held liable for payment of damages. All rights created by patent grant or registration of a utility model or design patent are reserved.

43.13 Fuel pressure setpoint calculation (Appl. Inc.)

Data Definition

Name	Mode	Coded Limits	Display Limits	Resolution	Unit
FUP_SP_EXT	O/V	0... FFFFH	0... 347776	5.3067216	hPa
External fuel pressure setpoint					
LV_FUP_EFP_SP_EXT_REQ	O/V	0... 1H	0 ...1	1	-
External request of fuel pressure setpoint (low pressure)					
LV_FUP_SP_EXT_REQ	O/V	0... 1H	0 ...1	1	-
External request for fuel pressure setpoint					
LV_FUP_SP_SRV_REQ	V	0... 1H	0 ...1	1	-
Garage or EOL tester request for fuel pressure setpoint					
SRV_31_ROUTINE_STATE	V	0... FFH	0... 255	1	-
Status of the external request for fuel pressure set point.					

Input Data

FUP_SP_REQ_ER_BAL_HOM {p. 3733}	IDX_CMB_MOD_INJ_MOD {p. 1813}	LV_ER_BAL_HOM_FUP_SP_REQ {p. 3733}	LV_IGK {p. 24082}
LV_ST_END {p. 7530}	NC_IDX_INH_MPI_FUSL {p. 1662}	NC_IDX_REQ_HPDI_FUSL {p. 1664}	NC_IDX_SUM_MPI {p. 1666}

Calibration Data

Name	Mode	Coded Limits	Display Limits	Resolution	Unit
C_FUP_SP_EXT	V	0... FFFFH	0... 347776	5.3067216	hPa
External request for manual FUP_SP					
LC_FUP_SP_SRV_REQ_MAN	V	0... 1H	0 ...1	1	-
Manual stimulation via application tool of garage or EOL tester request for fuel pressure setpoint					
LC_STATE_FUP_SP_SRV_REQ_MAN	V	0... 1H	0 ...1	1	-
Manual stimulation via application tool to get the routine state of the external request for fuel pressure setpoint					

Configuration Data

Name	Mode	Coded Limits	Display Limits	Resolution	Unit
NC_FID_FUP_SP_EXT_REQ	-	0... FFFFH	0... 65535	1	-
Run the external fuel pressure setpoint request without error feedback					

Action Definitions

Copyright ©Continental AG. Transmittal, reproduction, dissemination and/or editing of this document as well as utilisation of its contents and communication thereof to others without expressed authorisation are prohibited. Offenders will be held liable for payment of damages. All rights created by patent grant or registration of a utility model or design patent are reserved.

ACTION_FUSL_GetFupSpSrvState(OUT <PRM_SRV_31_ROUTINE_STATE>)					**Mode: O**
Routine state of the external request for fuel pressure setpoint					
Parameter	**Type**	**Hex.Limits**	**Phys.Limits**	**Resol.**	**Unit**
PRM_SRV_31_ROUTINE_STATE	out	0... FFH	0... 255	1	-
Status of the external request for fuel pressure set point.					

ACTION_FUSL_StartFupSpExtReq()	**Mode: O**
Start external request for fuel pressure setpoint	

ACTION_FUSL_StopFupSpExtReq()	**Mode: O**
Stop external request for fuel pressure setpoint	

Import actions:

ACTION_CBMD_ClrInh(IN <PRM_IDX_CMB_INH>)
ACTION_CBMD_ClrReq(IN <PRM_IDX_CMB_REQ>)
ACTION_CBMD_SetInh(IN <PRM_IDX_CMB_INH>)
ACTION_CBMD_SetReq(IN <PRM_IDX_CMB_REQ>)
ACTION_FARM_GetPermission(IN <PRM_FID>, **OUT** <PRM_LV_PRMS>)

General Information

VAG tester interface for external adjustment of FUP_SP and FUP_EFP_SP is realized by action interface for "start" and "stop" external adjustment, as well as action that delivers status of tester routine.

Application Conditions

Initialisation: `at reset set all variables to zero`

Activation: `always`

Deactivation: `never`

Recurrence: `10ms`

Function Description

```
If      (       LC_FUP_SP_SRV_REQ_MAN
        And Not(lv_fup_sp_srv_req_man_old)
        )
Then
        // Rising edge of LC_FUP_SP_SRV_REQ_MAN detected
        ACTION_FUSL_StartFupSpExtReq

Elseif (    Not(LC_FUP_SP_SRV_REQ_MAN)
        And     lv_fup_sp_srv_req_man_old
        )
Then
        // Falling edge of LC_FUP_SP_SRV_REQ_MAN detected
        ACTION_FUSL_StopFupSpExtReq
Endif
lv_fup_sp_srv_req_man_old = LC_FUP_SP_SRV_REQ_MAN

If (        LC_STATE_FUP_SP_SRV_REQ_MAN
```

Copyright©Continental AG. Transmittal, reproduction, dissemination and/or editing of this document as well as utilisation of its contents and communication thereof to others without expressed authorisation are prohibited. Offenders will be held liable for payment of damages. All rights created by patent grant or registration of a utility model or design patent are reserved.

```
   And Not(lv_state_fup_sp_srv_req_man_old)
   )
Then
  // Rising edge of LC_STATE_FUP_SP_SRV_REQ_MAN detected
  ACTION_FUSL_GetFupSpSrvState
Endif
lv_state_fup_sp_srv_req_man_old = LC_STATE_FUP_SP_SRV_REQ_MAN

LV_FUP_SP_EXT_REQ = LV_FUP_SP_SRV_REQ OR LV_ER_BAL_HOM_FUP_SP_REQ
If LV_ER_BAL_HOM_FUP_SP_REQ
Then
  FUP_SP_EXT = FUP_SP_REQ_ER_BAL_HOM
Else
  FUP_SP_EXT = C_FUP_SP_EXT
Endif
```

43.13.1 ACTION_FUSL_StartFupSpExtReq

```
LV_FUP_EFP_SP_EXT_REQ = 1
LV_FUP_SP_SRV_REQ = LV_IGK AND LV_ST_END
ACTION_CBMD_SetInh(NC_IDX_INH_MPI_FUSL)
ACTION_CBMD_SetReq(NC_IDX_REQ_HPDI_FUSL)
```

43.13.2 ACTION_FUSL_StopFupSpExtReq

```
LV_FUP_EFP_SP_EXT_REQ = 0
LV_FUP_SP_SRV_REQ = 0
ACTION_CBMD_ClrInh(NC_IDX_INH_MPI_FUSL)
ACTION_CBMD_ClrReq(NC_IDX_REQ_HPDI_FUSL)
```

43.13.3 ACTION_FUSL_GetFupSpSrvState

```
If not(ACTION_FARM_GetPermission(NC_FID_FUP_SP_EXT_REQ))
Then
  //error
  SRV_31_ROUTINE_STATE = 0x40
Else
  If    (   LV_FUP_SP_SRV_REQ
        AND IDX_CMB_MOD_INJ_MOD <> NC_IDX_SUM_MPI
        )
     OR LV_FUP_EFP_SP_EXT_REQ
  Then
    //started
    SRV_31_ROUTINE_STATE = 0xC0
  Else
    //not started
    SRV_31_ROUTINE_STATE = 0x00
  Endif
Endif
```

Copyright © Continental AG. Transmittal, reproduction, dissemination and/or editing of this document as well as utilisation of its contents and communication thereof to others without expressed authorisation are prohibited. Offenders will be held liable for payment of damages. All rights created by patent grant or registration of a utility model or design patent are reserved.

43.14 Fuel pressure control

Data Definition

Name	Mode	Coded Limits	Display Limits	Resolution	Unit
FUEL_MASS_AD	O/V/S	8000... 7FFFH	-694.510597391 ...694.4894026093	0.02119478	mg
Adaptive fuel mass					
FUEL_MASS_AD_DIF	O/V	8000... 7FFFH	-694.510597391 ...694.4894026093	0.02119478	mg
Deviation of the fuel mass for the adaptation					
FUEL_MASS_AD_SEG	V	8000... 7FFFH	-694.510597391 ...694.4894026093	0.02119478	mg
Adaptive fuel mass for segment synchronous calculation					
FUEL_MASS_REQ_CTL	O/V	8000... 7FFFH	-694.510597391 ...694.4894026093	0.02119478	mg
Controller output					
FUEL_MASS_REQ_I_CTL	O/V	8000... 7FFFH	-694.510597391 ...694.4894026093	0.02119478	mg
I-part of the controller					
FUEL_MASS_REQ_I_CTL_H	V	8000... 7FFFH	-131.072 ...131.068	0.004	mg
I-part of the controller in high resolution					
FUEL_MASS_REQ_I_CTL_MMV	V	8000... 7FFFH	-694.510597391 ...694.4894026093	0.02119478	mg
Mean value of the I-part of the controller					
FUEL_MASS_REQ_P_CTL	O/V	8000... 7FFFH	-694.510597391 ...694.4894026093	0.02119478	mg
P-part of the controller					
FUP_DIF	O/V	8000... 7FFFH	-173890 ...173884	5.30669108	hPa
Deviation of fuel pressure setpoint and measured fuel pressure					
LV_FUEL_ADD_ACT	V	0... 1H	0 ...1	1	-
Logical variable indicating that additional fuel mass is added to precontrol					
LV_FUEL_MASS_AD_STOP	V	0... 1H	0 ...1	1	-
Logical variable for stopping fuel mass adaptation					
LV_FUEL_MASS_CTL_RST	V	0... 1H	0 ...1	1	-
Logical variable requesting I-part reset of controller for flow control					
LV_FUEL_MASS_CTL_STOP	V	0... 1H	0 ...1	1	-
Logical variable requesting I-part freeze of controller for flow control					
T_CTR_FUEL_MASS_AD	V	0... FFH	0... 255	1	-
Time counter before adaptation is allowed					

Input Data

FUP {p. 11886}	FUP_SP {p. 11952}	LV_ES {p. 7530}	LV_FUEL_MASS_AD_ENA {p. 12184}
LV_FUP_LIH_H_PRS_CTL_REQ {p. 12184}	LV_FUP_LIH_L_PRS_CTL_REQ {p. 12184}	LV_ST_END {p. 7530}	MFF_SP_FUP_CTL {p. 11463}
MFP {p. 11984}	N_32 {p. 8079}	PUMP_VOL_VCV {p. 11984}	PV_AV_GRD {p. 4450}

Copyright ©Continental AG. Transmittal, reproduction, dissemination and/or editing of this document as well as utilisation of its contents and communication thereof to others without expressed authorisation are prohibited. Offenders will be held liable for payment of damages. All rights created by patent grant or registration of a utility model or design patent are reserved.

PV_AV_H {p. 4450}	STATE_VCV {p. 11985}	TFU_HPP {p. 11817}	

Calibration Data

Name	Mode	Coded Limits	Display Limits	Resolution	Unit
C_CTR_CYC_FUEL_ADD	-	0... FFFFH	0... 65535	1	-
Number of segments where adding additional fuel mass to precontrol is active					
C_CTR_MASS_FUEL_CTL_RST	-	0... FFH	0... 255	1	-
Counter used to reset high pressure fuel control during fuel cut-off state					
C_FUEL_MASS_AD_COR_CRLC	-	0... FFH	0... 0.99609375	0.00390625	-
Filter constant for the fuel mass adaptation					
C_FUEL_MASS_AD_MAX	-	8000... 7FFFH	-694.510597391 ...694.4894026093	0.02119478	mg
Maximum adaptive fuel mass					
C_FUEL_MASS_AD_MIN	-	8000... 7FFFH	-694.510597391 ...694.4894026093	0.02119478	mg
Minimum adaptive fuel mass					
C_FUEL_MASS_REQ_I_CTL_MAX	-	8000... 7FFFH	-131.072 ...131.068	0.004	mg
Maximum I-part of the controller					
C_FUEL_MASS_REQ_I_CTL_MIN	-	8000... 7FFFH	-131.072 ...131.068	0.004	mg
Minimum I-part of the controller					
C_FUEL_MASS_REQ_I_CTL_MMV_CRLC	-	0... FFH	0... 0.99609375	0.00390625	-
Filter constant for moving mean value calculation of the I-part					
C_FUP_DIF_MIN_FUEL_MASS_AD_STOP	V	0... FFFFH	0... 347776	5.3067216	hPa
Minimum deviation of fuel pressure set point and measured fuel pressure to stop the fuel mass adaptation					
C_MFP_FUEL_MASS_AD_MAX	-	0... FFFFH	0... 1389	0.02119478	mg
Maximum pump fuel mass for allowing adaptive fuel mass					
C_MFP_FUEL_MASS_AD_MIN	-	0... FFFFH	0... 1389	0.02119478	mg
Minimum pump fuel mass for allowing adaptive fuel mass					
C_N_FUEL_MASS_AD_MAX	-	0... FFH	0... 8160	32	rpm
Maximum engine speed threshold for allowing fuel mass adaption					
C_N_FUEL_MASS_AD_MIN	-	0... FFH	0... 8160	32	rpm
Minimum engine speed threshold for allowing fuel mass adaptation					
C_PUMP_VOL_VCV_MAX	-	0... FFFFH	0... 99.99847412109	0.00152588	%
Upper limit of effective pump volume to stop high pressure fuel controller					
C_PUMP_VOL_VCV_MIN	-	0... FFFFH	0... 99.99847412109	0.00152588	%
Lower limit of effective pump volume to stop high pressure fuel controller					
C_PV_GRD_THD_FUEL_ADD	-	0... FFH	-1250... 1240.234375	9.765625	%/s
Pedal value gradient threshold for adding fuel mass					
C_PV_THD_FUEL_ADD	-	0... 3FFH	0... 99.90234375	0.09765625	%
Pedal value threshold for adding fuel mass					
C_T_CTR_FUEL_MASS_AD_MAX	-	0... FFH	0... 255	1	-
Number of recurrences with stable conditions before an adaptation occurs					

Copyright ©Continental AG. Transmittal, reproduction, dissemination and/or editing of this document as well as utilisation of its contents and communication thereof to others without expressed authorisation are prohibited. Offenders will be held liable for payment of damages. All rights created by patent grant or registration of a utility model or design patent are reserved.

Name	Mode	Coded Limits	Display Limits	Resolution	Unit
CLF_FUEL_MASS_CTL_STOP	V	0... FFH	0... 255	1	-
Calibratable logical field to mask the conditions requesting I-part freeze of controller for flow control					
IP_FAC_FUEL_MASS_I_CTL_N	-	0... FFFFH	0... 1.999969482422	30.5176e-6	-
LDP_N_32_FAC_FUEL_MASS_I_CTL_N	8	0... FFH	0... 8160	32	rpm
Factor for engine speed dependancy to i-part of the controller					
IP_FAC_FUEL_MASS_P_CTL_N	-	0... FFFFH	0... 1.999969482422	30.5176e-6	-
LDP_N_32_FAC_FUEL_MASS_P_CTL_N	8	0... FFH	0... 8160	32	rpm
Factor for engine speed dependancy to p-part of the controller					
IP_FAC_FUEL_MASS_P_CTL_TFU	-	0... FFFFH	0... 1.999969482422	30.5176e-6	-
LDP_TFU_FAC_FUEL_MASS_REQ	4	0... FEH	-48... 142.5	0.75	°C
Factor for temperature influence to p-part of the controller					
IP_FUEL_MASS_REQ_ADD	-	0... FFFFH	0... 1389	0.02119478	mg
LDP_N_32_IP_FUEL_MASS_REQ_ADD	8	0... FFH	0... 8160	32	rpm
Additive fuel mass depending on engine speed					
IP_FUEL_MASS_REQ_I_CTL	-	0... FFFFH	-131.072 ...131.068	0.004	mg
LDP_FUP_DIF_FUEL_MASS_REQ_I_CTL	8	0... FFFFH	-173890 ...173884	5.30669108	hPa
I-part of the controller with deviation of fuel pressure setpoint and measured fuel pressure					
IP_FUEL_MASS_REQ_P_CTL	-	0... FFFFH	-694.5... 694.478806	0.02119446	mg
LDP_FUP_DIF_FUEL_MASS_REQ_P_CTL	8	0... FFFFH	-173890 ...173884	5.30669108	hPa
P-part of the controller with deviation of fuel pressure setpoint and measured fuel pressure					
LC_AD_CLR_FUEL_MASS_AD	-	0... 1H	0 ...1	1	-
Switch for resetting the fuel mass adaptation					

▶ General Information

The control algorithm can be used for all kind of flow controlled pump. This function is the interface of the fuel pressure acquisition and the fuel pressure setpoint calculation to the fuel pump control.
It calculates basically a requested fuel mass to be delivered into the fuel rail by the HP pump. This calculation is based on the fuel pressure setpoint, measured fuel pressure, the fuel mass flow setpoint and the feedback of the pump interface, which is the fuel mass delivered by the pump. Additionally there is the input fuel temperature, which is needed to correct the calculation of the fuel mass in the rail.

▶ Application Conditions

Initialisation: `RST, ERU2ES, NVMINI, NVMRES, NVMSTO`

Activation:
```
SEG: LV_ST_END==1
10MS: LV_ST_END==0
100MS: always
```

Deactivation: `if activation not true`

Recurrence: `SEG, 10MS, 100MS`

▶ Function Description

Copyright©Continental AG. Transmittal, reproduction, dissemination and/or editing of this document as well as utilisation of its contents and communication thereof to others without expressed authorisation are prohibited. Offenders will be held liable for payment of damages. All rights created by patent grant or registration of a utility model or design patent are reserved.

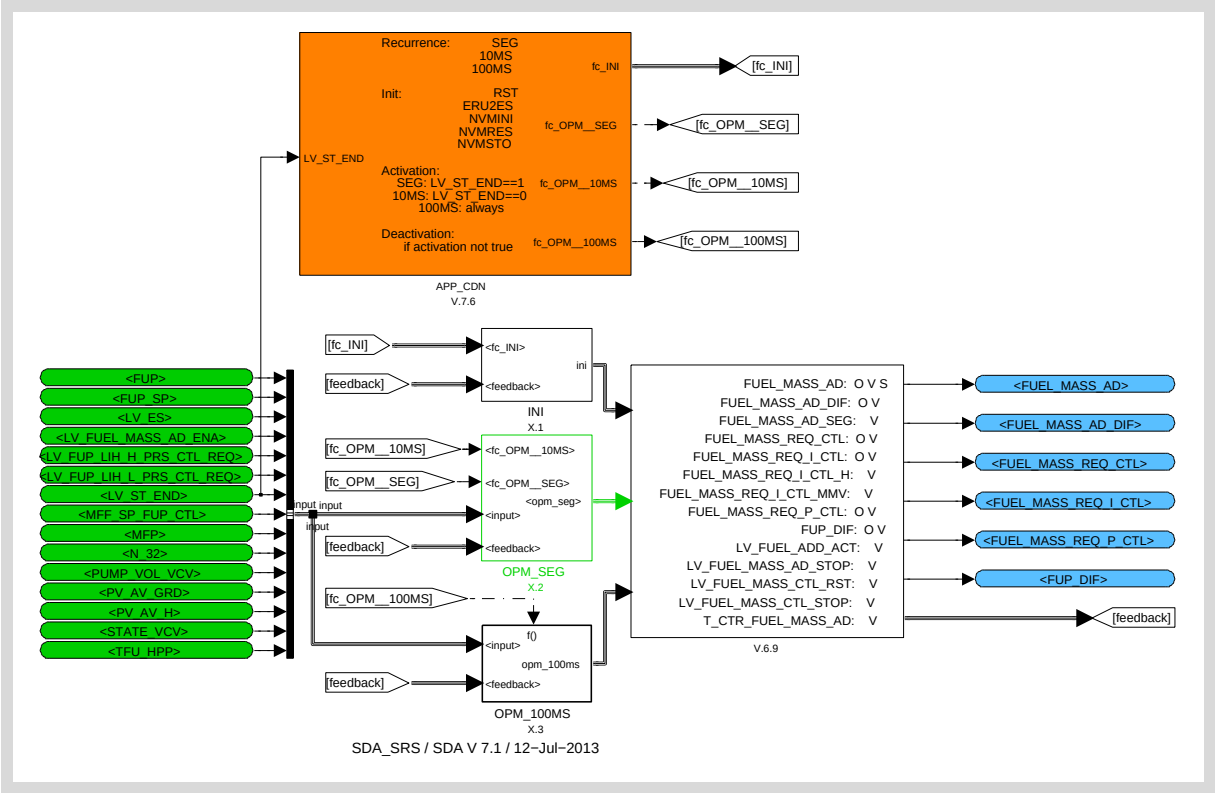

Figure 43.14.1:

Copyright ©Continental AG. Transmittal, reproduction, dissemination and/or editing of this document as well as utilisation of its contents and communication thereof to others without expressed authorisation are prohibited. Offenders will be held liable for payment of damages. All rights created by patent grant or registration of a utility model or design patent are reserved.

43.14.1 Initialization

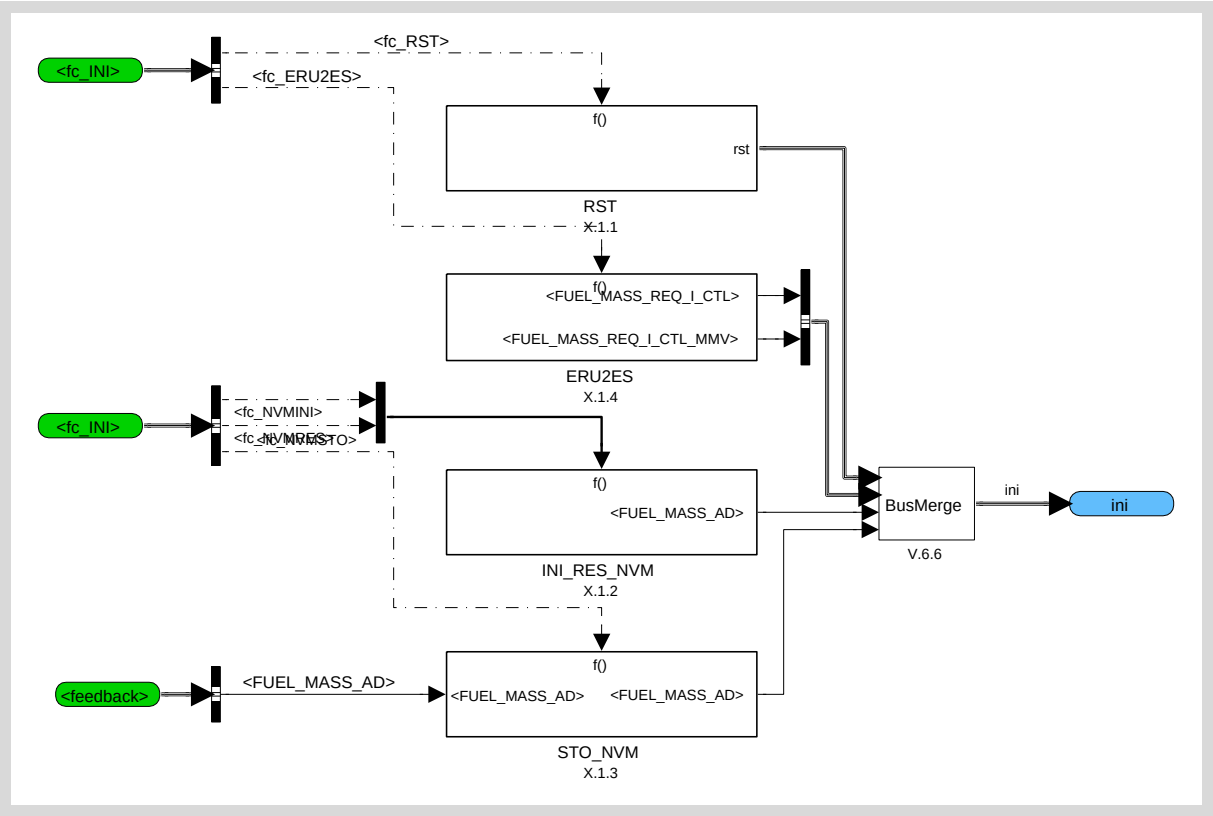

Figure 43.14.2:

Copyright ©Continental AG. Transmittal, reproduction, dissemination and/or editing of this document as well as utilisation of its contents and communication thereof to others without expressed authorisation are prohibited. Offenders will be held liable for payment of damages. All rights created by patent grant or registration of a utility model or design patent are reserved.

43.14.1.1 Initialization at reset

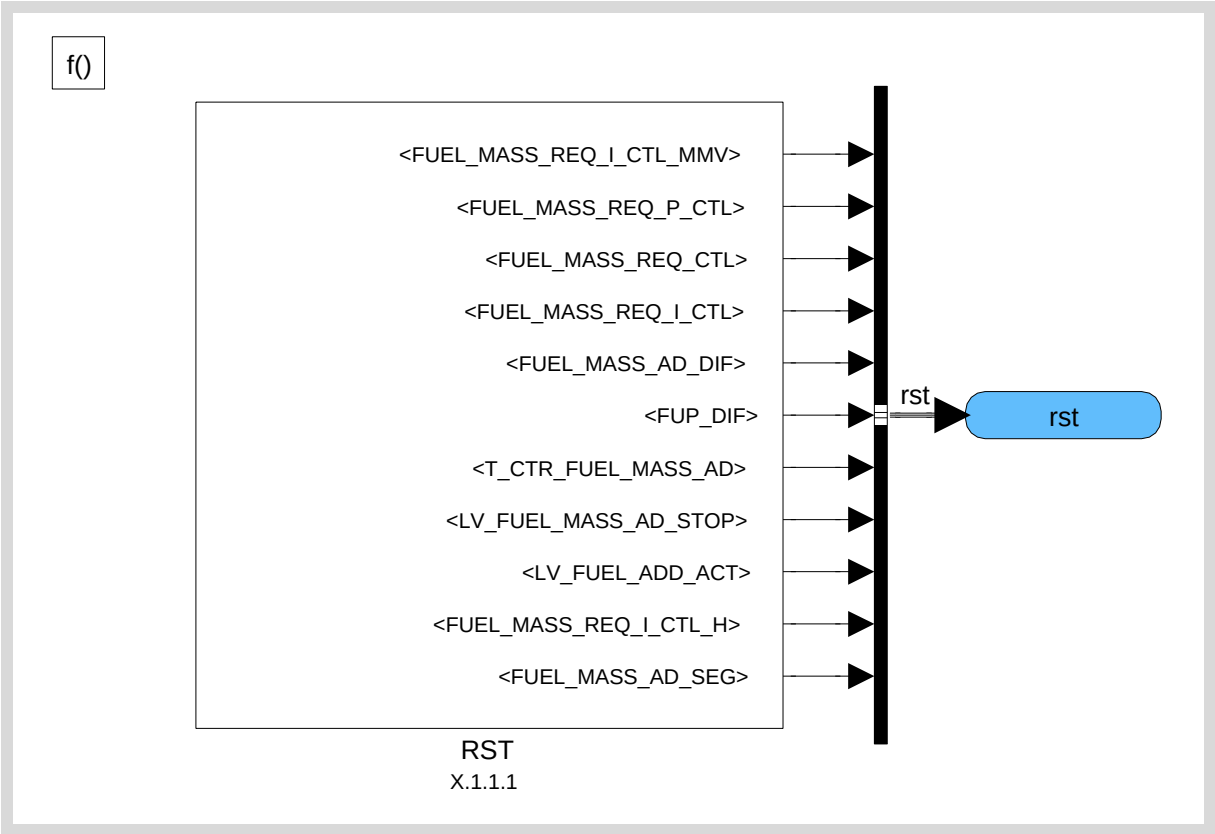

Figure 43.14.3:

43.14.1.1.1 Initialization at Reset

All outputs Reset to '0'

Copyright ©Continental AG. Transmittal, reproduction, dissemination and/or editing of this document as well as utilisation of its contents and communication thereof to others without expressed authorisation are prohibited. Offenders will be held liable for payment of damages. All rights created by patent grant or registration of a utility model or design patent are reserved.

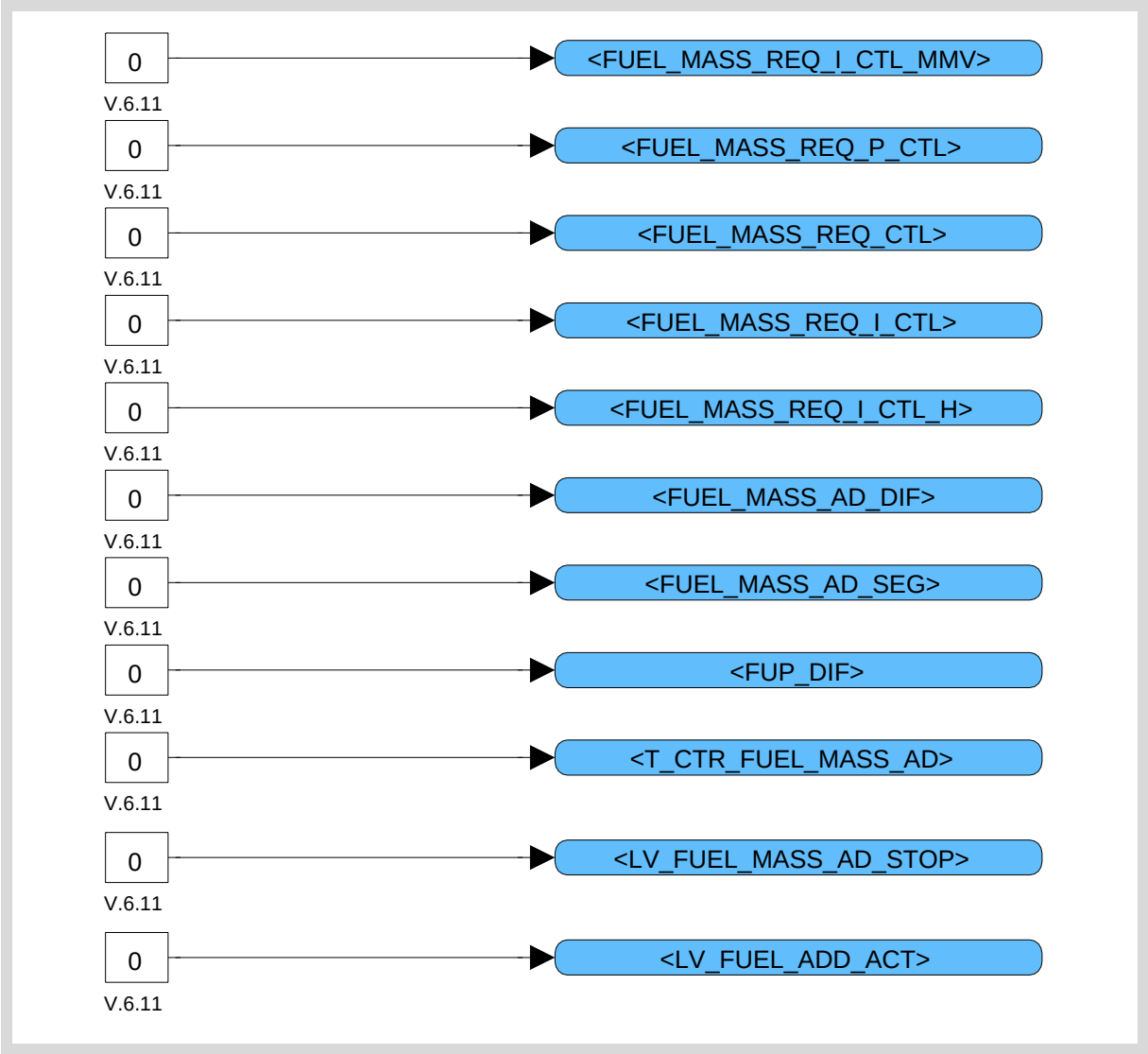

Figure 43.14.4:

43.14.1.2 Initialization with constants

If EEPROM error or ECU brand new or cleared by service tool then the outputs are initialised with constants.

Copyright ©Continental AG. Transmittal, reproduction, dissemination and/or editing of this document as well as utilisation of its contents and communication thereof to others without expressed authorisation are prohibited. Offenders will be held liable for payment of damages. All rights created by patent grant or registration of a utility model or design patent are reserved.

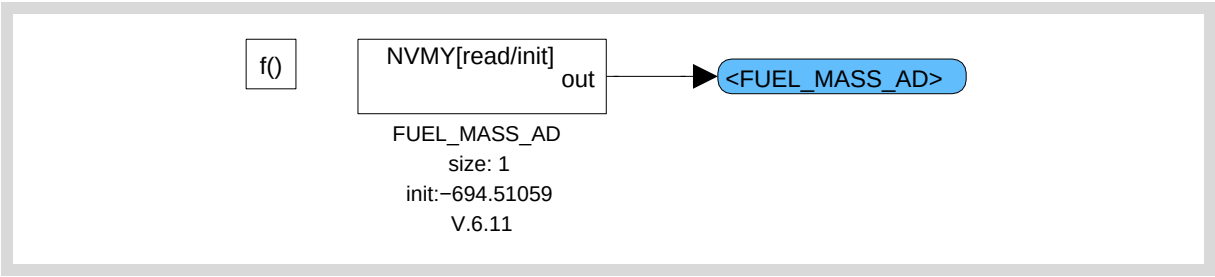

Figure 43.14.5:

43.14.1.3 Output save

In this part outputs are saved on the EEPROM.

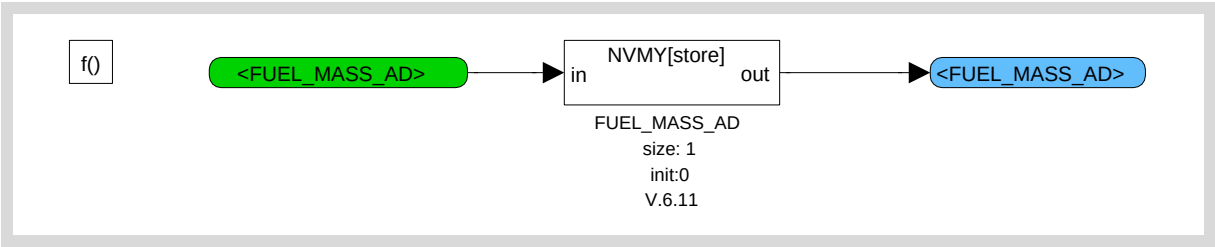

Figure 43.14.6:

43.14.1.4 Initialization during Engine run to engine stop

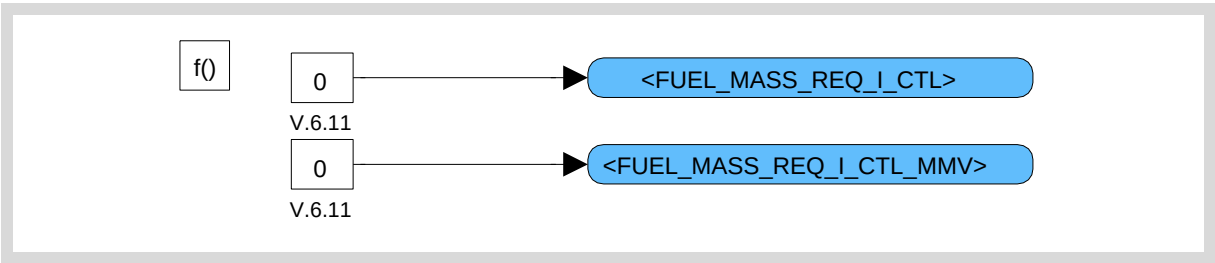

Figure 43.14.7:

43.14.2 Recurrence sequencing

Copyright ©Continental AG. Transmittal, reproduction, dissemination and/or editing of this document as well as utilisation of its contents and communication thereof to others without expressed authorisation are prohibited. Offenders will be held liable for payment of damages. All rights created by patent grant or registration of a utility model or design patent are reserved.

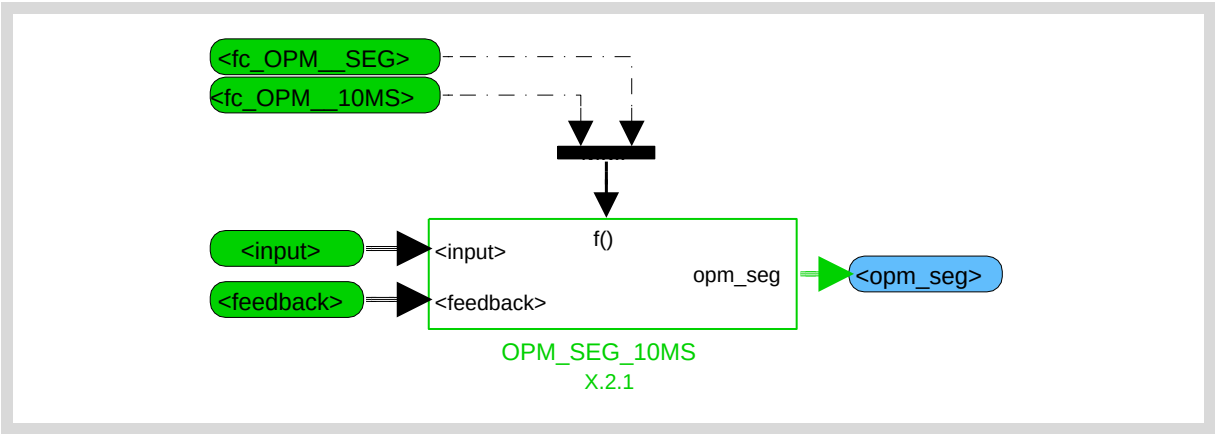

Figure 43.14.8:

43.14.2.1 Calculation Section

The functionality is split in several parts the calculation of the high pressure control authorization, the high pressure pump flow adaptation, the fuel pressure controller and the calculation of the final mass fuel flow request.

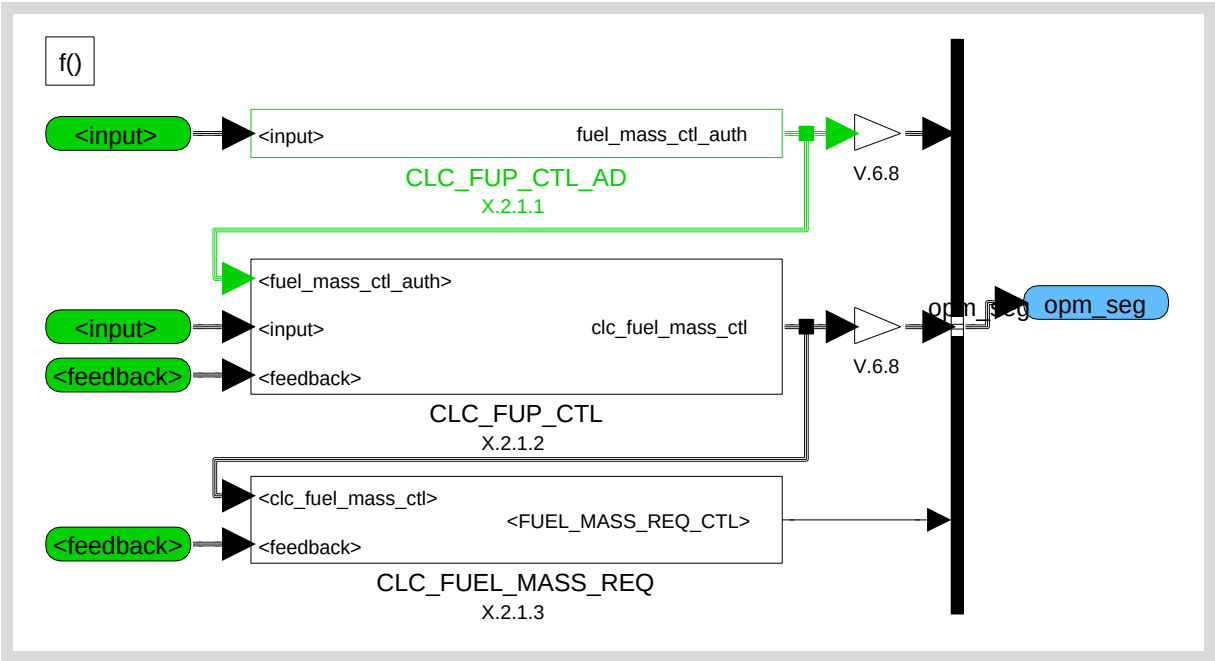

Figure 43.14.9:

43.14.2.1.1 Calculation Section

This function part is used to calculate the fuel pressure control authorization and adaptation function for the high pressure control pump.

Copyright ©Continental AG. Transmittal, reproduction, dissemination and/or editing of this document as well as utilisation of its contents and communication thereof to others without expressed authorisation are prohibited. Offenders will be held liable for payment of damages. All rights created by patent grant or registration of a utility model or design patent are reserved.

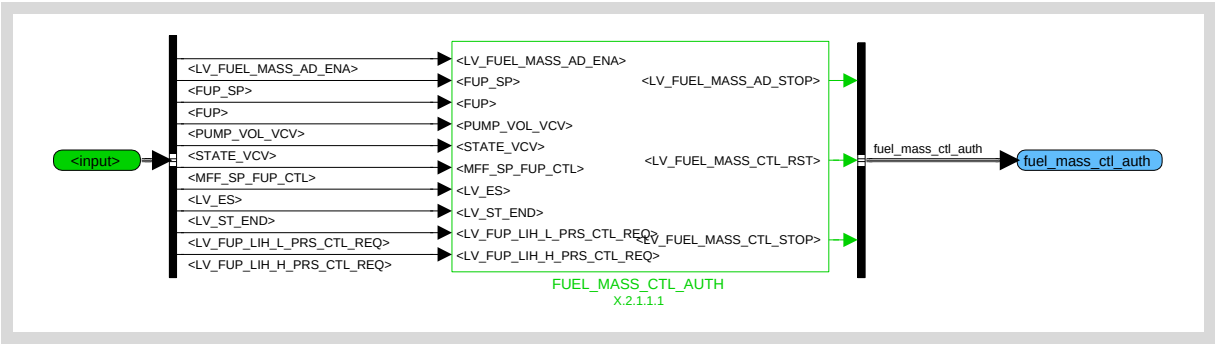

Figure 43.14.10:

43.14.2.1.1.1 Fuel pressure control authorization

This chapter is used to define the control variables for high pressure fuel control and adaptation.

Stop condition
* Calculated only during high pressure control mode otherwise I part of the controller is stopped !
* Anti windup of the I part is determined dependent on effective HPP output
Reset condition
* Reset of the I part is requested during stopped engine
* Additional reset of the I part at closed injectors and defined debounce time

Copyright ©Continental AG. Transmittal, reproduction, dissemination and/or editing of this document as well as utilisation of its contents and communication thereof to others without expressed authorisation are prohibited. Offenders will be held liable for payment of damages. All rights created by patent grant or registration of a utility model or design patent are reserved.

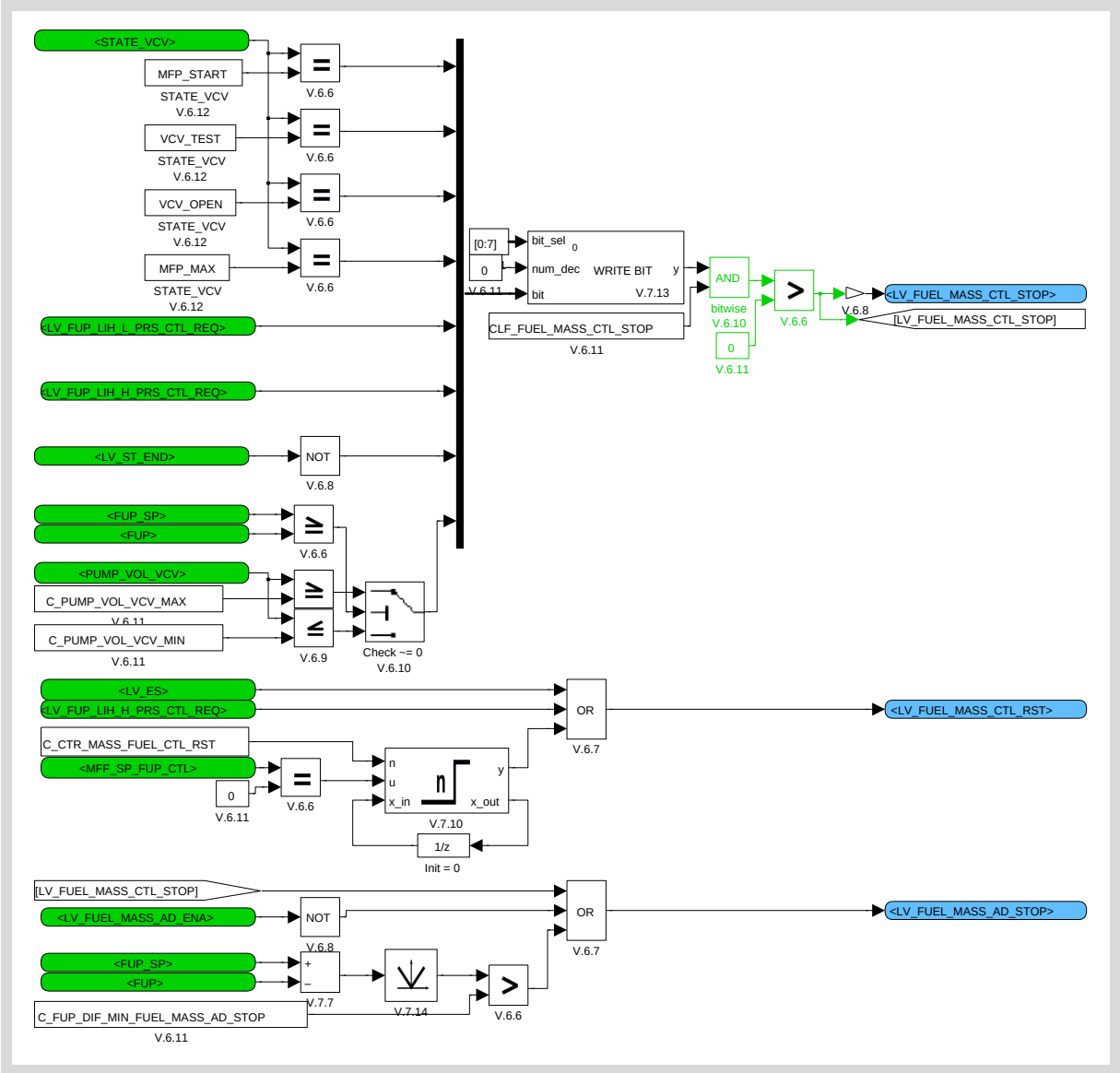

Figure 43.14.11:

43.14.2.1.2 Fuel mass model Calculation

The fuel mass model calculation and the controller value are calculated in these two blocks.

Copyright ©Continental AG. Transmittal, reproduction, dissemination and/or editing of this document as well as utilisation of its contents and communication thereof to others without expressed authorisation are prohibited. Offenders will be held liable for payment of damages. All rights created by patent grant or registration of a utility model or design patent are reserved.

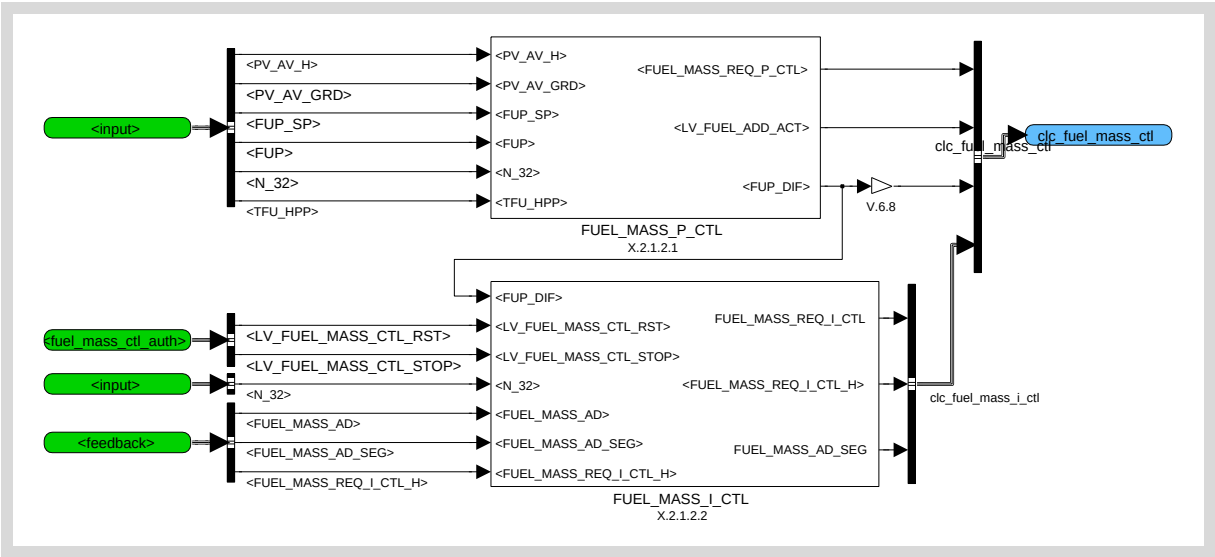

Figure 43.14.12:

43.14.2.1.2.1 Calculation of P controller part

Out of the fuel pressure deviation related to the used fuel pressure the p-control value is calculated. This value can be modified by the weighting factor given by the map. Out of this calculated p-control fuel pressure value a p-control fuel mass must be chosen. This is done by the second map. Additionally it can be necessary to add more fuel due to avoid fuel pressure decrease at fast load change requested by fast pedal activation. This is done by an additional map.

Copyright ©Continental AG. Transmittal, reproduction, dissemination and/or editing of this document as well as utilisation of its contents and communication thereof to others without expressed authorisation are prohibited. Offenders will be held liable for payment of damages. All rights created by patent grant or registration of a utility model or design patent are reserved.

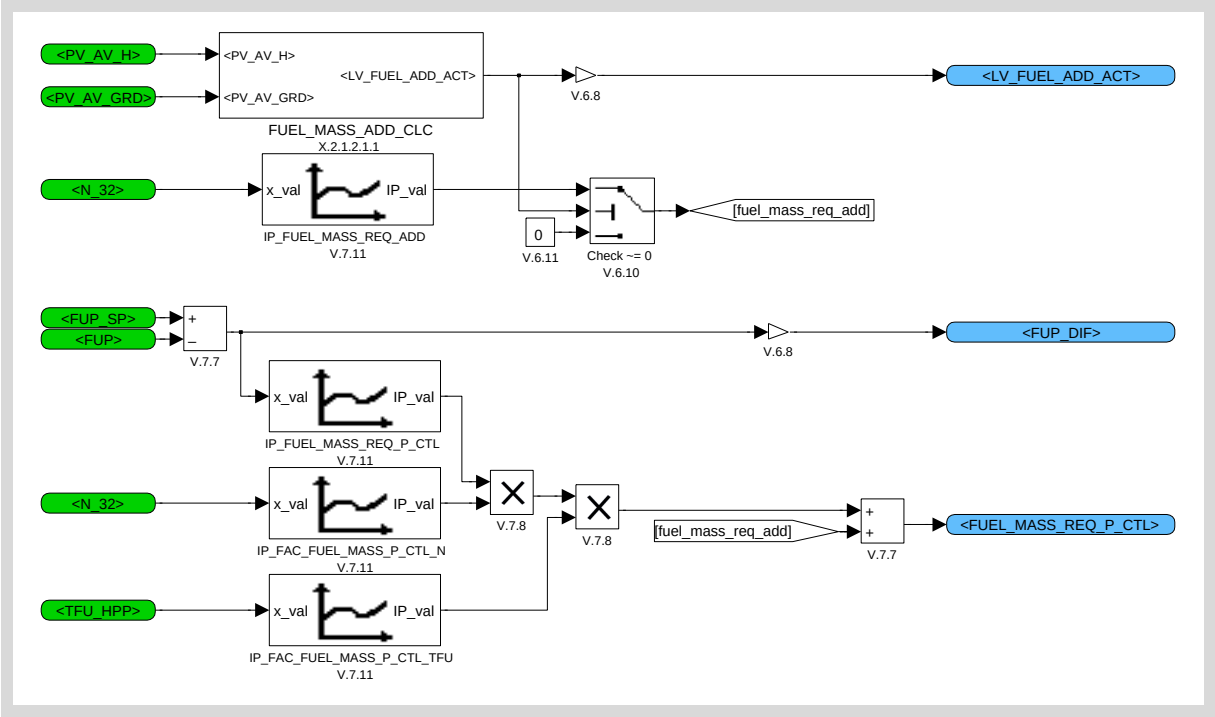

Figure 43.14.13:

43.14.2.1.2.1.1 Detect Higher Pedal value to add to pre-controller additional fuel mass

In case of a higher pedal value and a high gradient of the pedal value an additional fuel mass will be added to the pre-controller. This is active for a certain amount of segments and is shown by a flag.

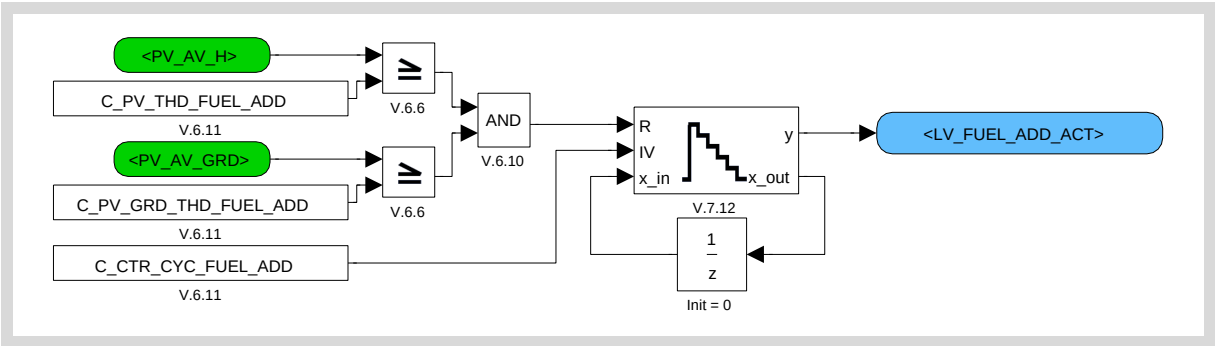

Figure 43.14.14:

43.14.2.1.2.2 Calculation of I controller part

Out of the fuel pressure deviation related to the used fuel pressure the i-control value is calculated. This value can be modified by the weighting factor dependent to engine speed to balance speed of integral part at different segment durations. In case of time synchronous calculation (LV_ST_END = 0), weighting factor should be set to a constant integration speed.

Copyright ©Continental AG. Transmittal, reproduction, dissemination and/or editing of this document as well as utilisation of its contents and communication thereof to others without expressed authorisation are prohibited. Offenders will be held liable for payment of damages. All rights created by patent grant or registration of a utility model or design patent are reserved.

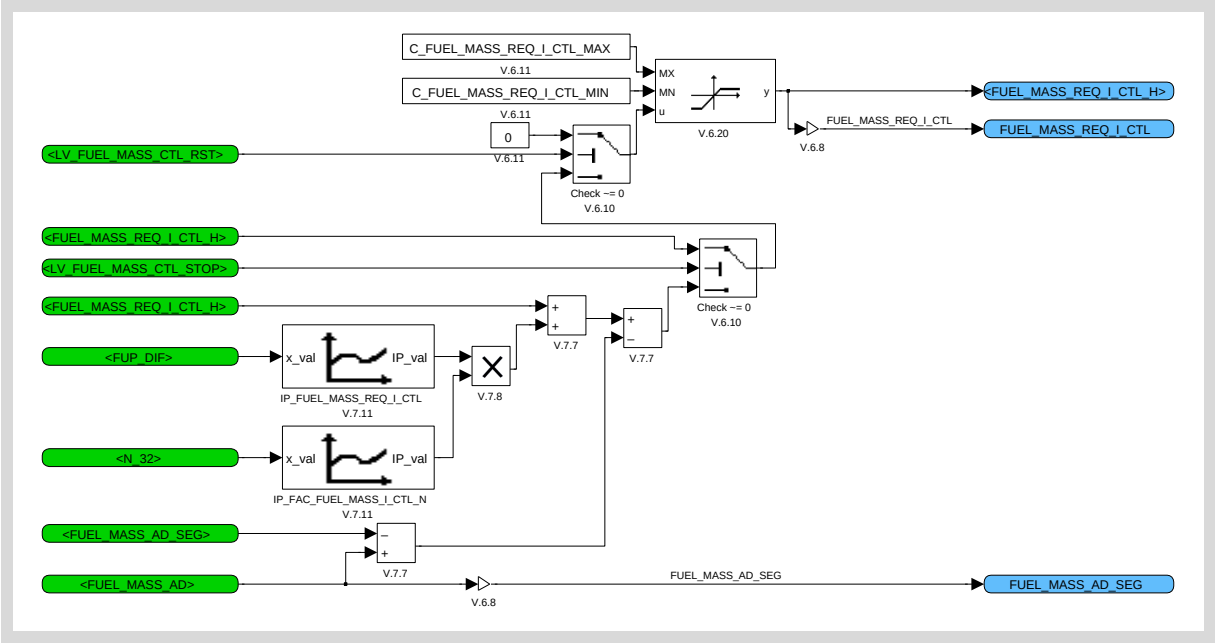

Figure 43.14.15:

43.14.2.1.3 Calculation of fuel mass requested from pump

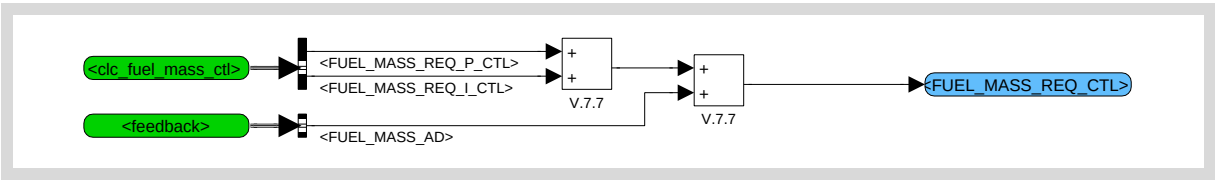

Figure 43.14.16:

Copyright ©Continental AG. Transmittal, reproduction, dissemination and/or editing of this document as well as utilisation of its contents and communication thereof to others without expressed authorisation are prohibited. Offenders will be held liable for payment of damages. All rights created by patent grant or registration of a utility model or design patent are reserved.

43.14.3 Calculation Section

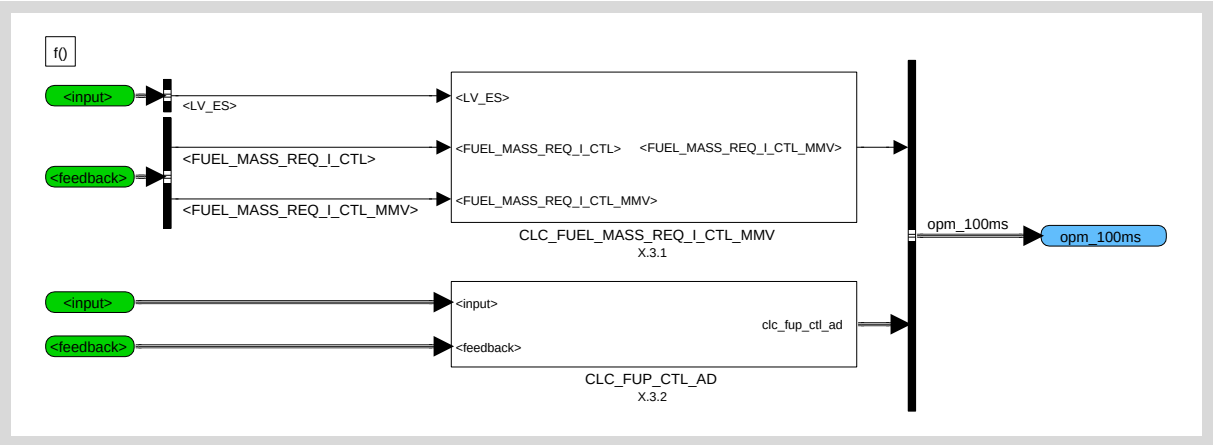

Figure 43.14.17:

43.14.3.1 Calculation of Mean value of the I-part

This occurs every 100ms

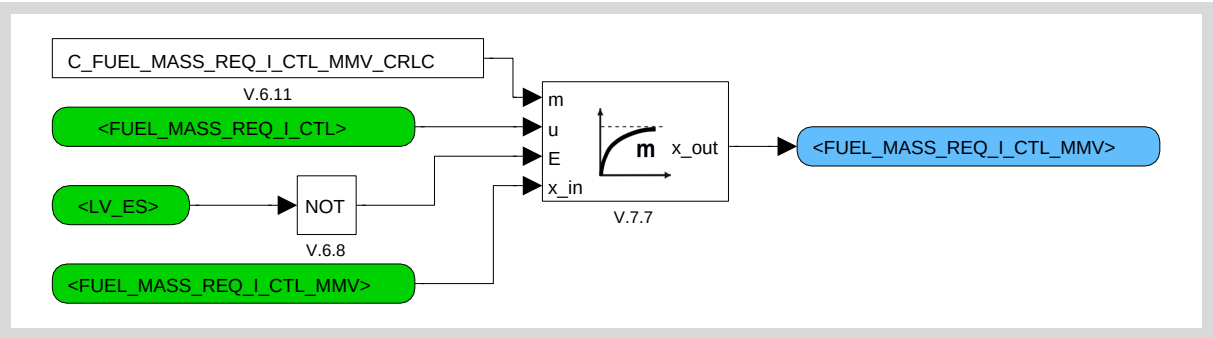

Figure 43.14.18:

43.14.3.2 Calculation of Adaptive fuel mass

The adaptation is split into two parts. One is calculating the adaptive fuel mass difference and one is responsible for the actual fuel mass determination.

Copyright ©Continental AG. Transmittal, reproduction, dissemination and/or editing of this document as well as utilisation of its contents and communication thereof to others without expressed authorisation are prohibited. Offenders will be held liable for payment of damages. All rights created by patent grant or registration of a utility model or design patent are reserved.

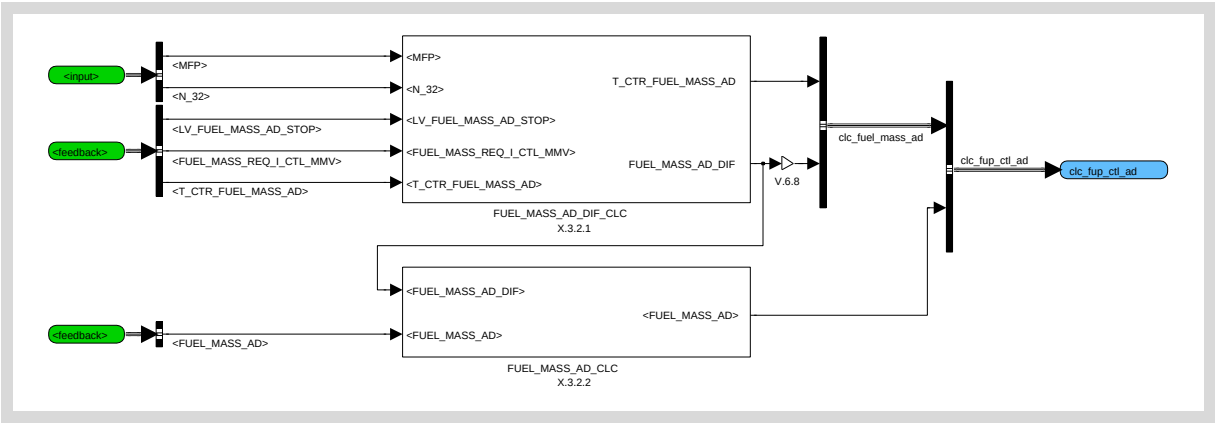

Figure 43.14.19:

43.14.3.2.1 Calculation of Adaptive fuel mass difference

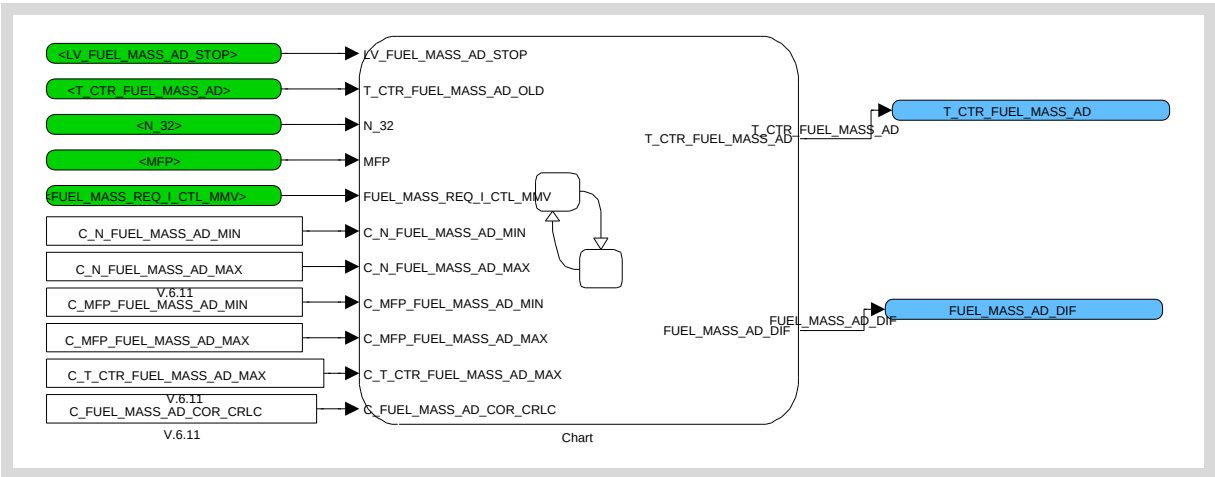

Figure 43.14.20:

Copyright ©Continental AG. Transmittal, reproduction, dissemination and/or editing of this document as well as utilisation of its contents and communication thereof to others without expressed authorisation are prohibited. Offenders will be held liable for payment of damages. All rights created by patent grant or registration of a utility model or design patent are reserved.

43.14.3.2.1.1 Chart

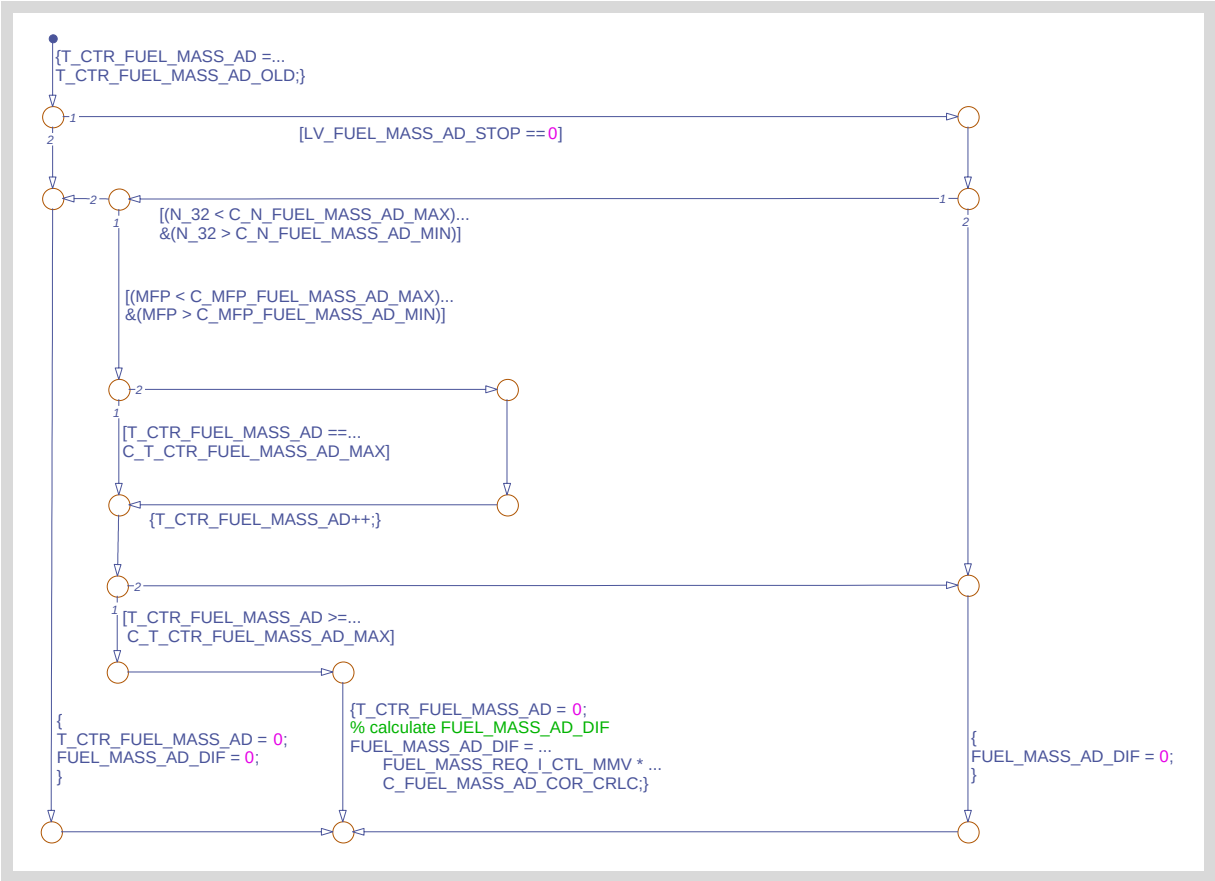

Figure 43.14.21:

43.14.3.2.2 Limiting fuel mass adaptation value

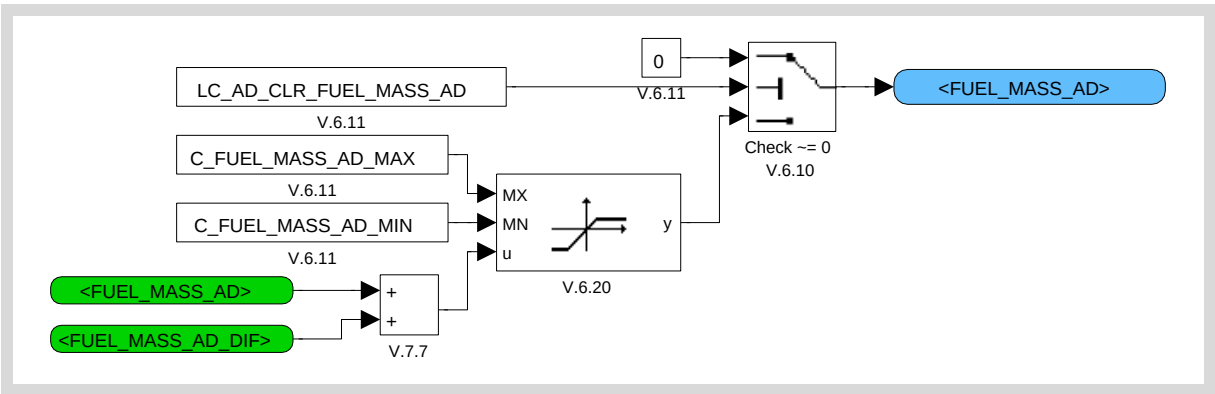

Figure 43.14.22:

Copyright ©Continental AG. Transmittal, reproduction, dissemination and/or editing of this document as well as utilisation of its contents and communication thereof to others without expressed authorisation are prohibited. Offenders will be held liable for payment of damages. All rights created by patent grant or registration of a utility model or design patent are reserved.

43.15 Fuel pressure actuator control

▶ Data Definition

Name	Mode	Coded Limits	Display Limits	Resolution	Unit
ANG_CUR_OFF_VCV	O/V	800... F800H	-720 ...720	0.0234375	°CRK
Angle to end current feed of the VCV (volume control valve)					
ANG_CUR_ON_VCV	O/V	0... FFFFH	0... 1535.9765625	0.0234375	°CRK
Angle to begin current feed of the VCV (volume control valve)					
ANG_DLY_VCV_CLOSE_ADD	V	0... 780H	0... 720	0.375	°CRK
Additional delay angle for closing of the valve					
ANG_REF_VCV	O/V	0... FFFFH	0... 1535.9765625	0.0234375	°CRK
Reference angle for VCV control					
ANG_VCV_CTL	V	0... FFFFH	0... 1535.9765625	0.0234375	°CRK
Current feed angle of the VCV (volume control valve)					
ANG_VCV_CTL_HOLD	V	0... FFFFH	0... 1535.9765625	0.0234375	°CRK
VCV holding angle					
CTR_FUP_DIF_HYS_MAX_AUTH	V	0... FFH	0... 255	1	-
counter for pressure decreases after soft landing adaptation is finished					
CTR_FUP_DIF_VCV_CLOSE_SL_AUTH	V	0... FFFFH	0... 65535	1	-
number of segments without pressure decrease after finished soft landing adaptation					
CTR_VCV_CLOSE_SL_AD	V/S	0... FFH	0... 255	1	-
Adaptation counter for VCV soft landing during closing					
CUR_VCV_CTL_HOLD	V	0... FFFFH	0... 65.535	0.001	A
Set point for VCV current closed loop control during holding phase					
CUR_VCV_CTL_HOLD_ST	V	0... FFFFH	0... 65.535	0.001	A
Set point for VCV current closed loop control during holding phase at engine start					
CUR_VCV_CTL_PEAK	V	0... FFFFH	0... 65.535	0.001	A
Set point for VCV current closed loop control during peak phase					
CUR_VCV_CTL_PEAK_RAW	V	0... FFFFH	0... 65.535	0.001	A
Raw set point for VCV current closed loop control during peak phase					
CUR_VCV_CTL_PEAK_ST	V	0... FFFFH	0... 65.535	0.001	A
Set point for VCV current closed loop control during peak phase at engine start					
CUR_VCV_OPL_CTL_MAX	V	0... FFFFH	0... 65.535	0.001	A
Maximum current set point of VCV control pulse during open loop current control mode					
FAC_FUEL_PUMP_EFF_COR	V	0... FFH	0... 0.99609375	0.00390625	-
Factor for the efficiency of the fuel pump according to the theoretical value					
FRQ_PWM_VCV_CTL_0	V	1F4... 2710H	500... 10000	1	Hz
Duty cycle frequency for VCV pick-up phase					
FRQ_PWM_VCV_CTL_0_SL	V	1F4... 2710H	500... 10000	1	Hz
Duty cycle frequency for VCV pick-up phase for soft landing during VCV closing					
FRQ_PWM_VCV_CTL_1	V	1F4... 2710H	500... 10000	1	Hz
Duty cycle frequency for VCV holding phase					
FRQ_PWM_VCV_CTL_DEACC	V	1F4... 2710H	500... 10000	1	Hz
Duty cycle frequency for current feed during VCV opening					
FRQ_PWM_VCV_CTL_PEAK	V	1F4... 2710H	500... 10000	1	Hz
Duty cycle frequency for pull-in phase of VCV control pulse					
FRQ_PWM_VCV_CTL_PEAK_ST	V	1F4... 2710H	500... 10000	1	Hz

Copyright ©Continental AG. Transmittal, reproduction, dissemination and/or editing of this document as well as utilisation of its contents and communication thereof to others without expressed authorisation are prohibited. Offenders will be held liable for payment of damages. All rights created by patent grant or registration of a utility model or design patent are reserved.

Name	Mode	Coded Limits	Display Limits	Resolution	Unit
Duty cycle frequency for pull-in phase of VCV control pulse at engine start					
FRQ_PWM_VCV_CTL_ST	V	1F4... 2710H	500... 10000	1	Hz
Duty cycle frequency of VCV control at pulse mode at START phase					
FRQ_PWM_VCV_DEACC_PEAK	V	1F4... 2710H	500... 10000	1	Hz
Duty cycle frequency for pull-in phase of VCV deacceleration pulse					
LF_CUR_CTL_MOD_VCV	V	0... FFH	0... 255	1	-
Closed loop control for VCV current will be applied for a certain pulse phase, if the related bit is set (bit 0: VCV_CTL_PEAK, bit 1: VCV_CTL_0, bit 2: VCV_CTL_1, bit 3: VCV_DEACC_PEAK, bit 4: VCV_CTL_DEACC, bit 5: VCV_CTL_PEAK_ST, bit 6: VCV_CTL_ST)					
LV_INH_VCV	O/V	0... 1H	0 ...1	1	-
Inhibit bit for activating the check valve of the pump					
LV_MFP_CTL_REQ	V	0... 1H	0 ...1	1	-
Logical flag for request of Pump Control phase					
LV_MFP_MAX_REQ	V	0... 1H	0 ...1	1	-
Logical flag for request of Pump Maximum opening phase					
LV_MFP_REQ_CONT	V	0... 1H	0 ...1	1	-
Bit is set during small quantity operation, (no fuel delivered=0; fuel delivered=1)					
LV_MFP_REQ_LOW	O/V	0... 1H	0 ...1	1	-
Bit is set at small quantity operation active					
LV_MFP_START_REQ	V	0... 1H	0 ...1	1	-
Logical flag for request of Pump Start phase					
LV_PWM_VCV_CLOSE_SL_AD_END	V	0... 1H	0 ...1	1	-
Adaptation of duty-cycle for VCV holding phase finished					
LV_SYN_ENG_VCV_CTL	V	0... 1H	0 ...1	1	-
Engine synchronization signal used for VCV actuator control					
LV_VCV_ACR_ACT	V	0... 1H	0 ...1	1	-
Logical variable activating actuator test mode					
LV_VCV_CLOSE_RNG_MIN	V	0... 1H	0 ...1	1	-
Minimum control angle to enable actuation of VCV is given					
LV_VCV_CLOSE_SL_AD_AUTH	V	0... 1H	0 ...1	1	-
Authorization for soft landing adaptation during VCV closing					
LV_VCV_CLOSE_SL_AD_END	O/V	0... 1H	0 ...1	1	-
Adaptation of VCV soft landing during closing finished					
LV_VCV_CLOSE_SL_AD_REQ	V	0... 1H	0 ...1	1	-
Request for re-adaptation of soft landing during VCV closing					
LV_VCV_CLOSE_SL_AD_RST	V	0... 1H	0 ...1	1	-
Request for reset of soft landing adaptation during VCV closing					
LV_VCV_CLOSE_SL_AD_WAIT	O/V	0... 1H	0 ...1	1	-
flag indicating that VCV adaptation is currently ongoing					
LV_VCV_CLOSE_SL_AUTH	V	0... 1H	0 ...1	1	-
Authorization for soft landing during VCV closing					
LV_VCV_DI	V	0... 1H	0 ...1	1	-
Indicates that VCV actuation is disabled					
LV_VCV_OPEN_REQ	V	0... 1H	0 ...1	1	-
Logical flag for request of Pump Opening phase					
LV_VCV_OPEN_SL_AUTH	V	0... 1H	0 ...1	1	-
Authorization for soft landing during VCV opening					

Copyright ©Continental AG. Transmittal, reproduction, dissemination and/or editing of this document as well as utilisation of its contents and communication thereof to others without expressed authorisation are prohibited. Offenders will be held liable for payment of damages. All rights created by patent grant or registration of a utility model or design patent are reserved.

Name	Mode	Coded Limits	Display Limits	Resolution	Unit
LV_VCV_ST_REQ	V	0... 1H	0 ...1	1	-
Bit indicating VCV driver is in start mode					
LV_VCV_STOP_REQ	V	0... 1H	0 ...1	1	-
Bit indicating disable parameter of MflDisable-action					
LV_VCV_TEST_REQ	V	0... 1H	0 ...1	1	-
Logical flag for request of Pump Test phase					
MFP	O/V	0... FFFFH	0... 1389	0.02119478	mg
Fuel mass delivered to the rail by the pump					
MFP_MAX	O/V	0... FFFFH	0... 1389	0.02119478	mg
Maximum fuel mass, which can be delivered by the pump					
MFP_OFS	V	8000... 7FFFH	-694.510597391 ...694.4894026093	0.02119478	mg
Offset of the fuel mass delivery due to pump behaviour					
MFP_REQ	V	0... FFFFH	0... 1389	0.02119478	mg
Requested fuel mass to be delivered taken MFP_OFS into consideration					
MFP_REQ_CTL	O/V	8000... 7FFFH	-694.510597391 ...694.4894026093	0.02119478	mg
Requested fuel mass to be delivered from fuel pressure control					
PUMP_NR	V	0... 1H	0 ...1	1	-
Fuel pump number (logical number 0..1)					
PUMP_VOL_VCV	O/V	0... FFFFH	0... 99.99847412109	0.00152588	%
Effective pump volume controlled by the high pressure pump volume control valve					
PWM_VCV_CLOSE_SL_AD	V	0... 4000H	0... 100	0.00610352	%
Applied adaptation value for duty cycle during VCV holding phase					
PWM_VCV_CLOSE_SL_AD_END	V/S	0... 4000H	0... 100	0.00610352	%
Adaptation value for duty cycle during VCV holding phase of last active adaptation					
PWM_VCV_CLOSE_SL_AD_TMP	V	0... 4000H	0... 100	0.00610352	%
Applied adaptation value for duty cycle during VCV holding phase (high resolution)					
PWM_VCV_CTL_0	V	0... 4000H	0... 100	0.00610352	%
Duty cycle for VCV actuation during VCV pick-up phase					
PWM_VCV_CTL_0_MIN	V/S	0... 4000H	0... 100	0.00610352	%
Adapted minimum value of duty cycle for VCV actuation during VCV pick-up phase					
PWM_VCV_CTL_0_SL	V	0... 4000H	0... 100	0.00610352	%
Duty cycle for VCV actuation during VCV pick-up phase and soft closing					
PWM_VCV_CTL_1	V	0... 4000H	0... 100	0.00610352	%
Duty cycle for VCV actuation during VCV holding phase					
PWM_VCV_CTL_DEACC	V	0... 4000H	0... 100	0.00610352	%
Duty cycle for VCV actuation during VCV opening phase					
PWM_VCV_CTL_PEAK	V	0... 4000H	0... 100	0.00610352	%
Duty cycle for pull-in phase of VCV control pulse					
PWM_VCV_CTL_PEAK_ST	V	0... 4000H	0... 100	0.00610352	%
Duty cycle for pull-in phase of VCV control pulse at engine start					
PWM_VCV_CTL_ST	V	0... 4000H	0... 100	0.00610352	%
Duty cycle of VCV control at pulse mode at START phase					
PWM_VCV_DEACC_PEAK	V	0... 4000H	0... 100	0.00610352	%
Duty cycle for pull-in phase of VCV deacceleration pulse					

Copyright ©Continental AG. Transmittal, reproduction, dissemination and/or editing of this document as well as utilisation of its contents and communication thereof to others without expressed authorisation are prohibited. Offenders will be held liable for payment of damages. All rights created by patent grant or registration of a utility model or design patent are reserved.

Name	Mode	Coded Limits	Display Limits	Resolution	Unit
PWM_VCV_OPL_CTL_MAX	V	0... 4000H	0... 100	0.00610352	%
Duty cycle for maximum current set point of VCV control pulse during open loop current control mode					
R_VCV_CLOSE_SL_AD_ST	V/S	0... FFFFH	0... 15.99975585938	244.141e-6	Ohm
resistance of VCV at adaptation start					
STATE_VCV	O/V	0H 1H 2H 3H 4H	VCV_TEST MFP_MAX MFP_CTL VCV_OPEN MFP_START	-	-
State of high pressure fuel pump control					
STATE_VCV_CLOSE_SL	O/V	0H 1H 2H 3H 4H	OFF STAT AD_PWM AD_T_DUR AD_ON	-	-
State of soft landing during VCV closing					
T_DEACC_OFF_VCV	V	0... FFFFH	0... 65.535	0.001	ms
Time after VCV control pulse, where no current is applied on VCV					
T_DEACC_ON_VCV	V	0... FFFFH	0... 65.535	0.001	ms
Duration of VCV current pulse during VCV opening					
T_DLY_VCV_CLOSE_ADD	V	0... FFFFH	0... 262.14	0.004	ms
Additional delay time for closing of the valve					
T_DLY_VCV_CTL	V	0... FFFFH	0... 262.14	0.004	ms
Delay time during soft closing of VCV					
T_DUR_VCV_CLOSE_SL_AD	V	0... FFFFH	0... 65.535	0.001	ms
Applied adaptation value for pull-in time during VCV closing phase					
T_DUR_VCV_CLOSE_SL_AD_END	V/S	0... FFFFH	0... 65.535	0.001	ms
Adaptation value for pull-in time during VCV closing phase of last active adaptation					
T_DUR_VCV_CTL_0_FW	V	0... FFFFH	0... 262.14	0.004	ms
Duration for freewheeling phase after VCV pick-up phase					
T_DUR_VCV_CTL_DEACC	V	0... FFFFH	0... 262.14	0.004	ms
Duration of "Pull-In" Phase during VCV opening					
T_DUR_VCV_CTL_FW	V	0... FFFFH	0... 262.14	0.004	ms
Duration of VCV current freewheeling phase after VCV closing pulse					
T_DUR_VCV_CTL_HOLD_0	V	0... FFFFH	0... 262.14	0.004	ms
Duration between start of VCV closing current and switch to 2nd PWM phase					
T_DUR_VCV_CTL_PEAK	V	0... FFFFH	0... 262.14	0.004	ms
Duration for pull-in pahse during VCV closing					
T_DUR_VCV_CTL_PEAK_ST	V	0... FFFFH	0... 262.14	0.004	ms
Duration for pull-in pahse during VCV closing at engine start					
T_DUR_VCV_DEACC_FW	V	0... FFFFH	0... 262.14	0.004	ms
Duration of VCV current freewheeling phase after VCV opening pulse					
T_FUP_MIN_VCV_LOCK	V	0... FFFFH	0... 1310.7	0.02	s
Time for extension of VCV hold phase at small rail pressure					
T_VCV_ACR_ACT	V	0... 64H	0 ...1	0.01	s
ON/OFF time counter for actuator test					
T_VCV_CLOSE_SL_AD_VLD	V/S	0... FFFFH	0... 65535	1	s

Copyright ©Continental AG. Transmittal, reproduction, dissemination and/or editing of this document as well as utilisation of its contents and communication thereof to others without expressed authorisation are prohibited. Offenders will be held liable for payment of damages. All rights created by patent grant or registration of a utility model or design patent are reserved.

Name	Mode	Coded Limits	Display Limits	Resolution	Unit
time since last finished adaptation					
T_VCV_CTL_ST	V	0... FFFFH	0... 262.14	0.004	ms
Duration of "Pull-In" phase during timebased actuation					
T_VCV_MFP_START	V	0... FFFFH	0... 655.35	0.01	s
Time delay for leaving the MFP_START phase					
VB_VCV_CLOSE_SL_AD_ST	V/S	0... FFH	0... 25.8984375	0.1015625	V
Battery voltage at beginning of VCV closing adaptation					
VCV_CLOSE_RNG	O/V	0... 780H	0... 720	0.375	°CRK
Range of closed check valve					
VCV_OPEN_ADD	V	0... 780H	-360 ...360	0.375	°CRK
Additive angle to open the VCV after TDC					

Input Data

CAM_FUEL_PUMP {p. 12086}	ECU_STATE {p. 5858}	FUEL_MASS_REQ_CTL {p. 11965}	FUP {p. 11886}
FUP_DIF {p. 11965}	FUP_SP {p. 11952}	FUP_SP_GRD_SEG {p. 11952}	LV_ACR_VCV_TEST_REQ {p. 12373}
LV_ES {p. 7530}	LV_FIRST_VLD_TOOTH {p. 8042}	LV_FUP_LIH_DPS_DI {p. 12184}	LV_FUP_LIH_L_PRS_CTL_REQ {p. 12184}
LV_IGK {p. 24082}	LV_IS {p. 7530}	LV_ST_END {p. 7530}	LV_ST_H_PRS {p. 8444}
LV_VAR_HPP {p. 24791}	LV_VCV_OPEN_EXT_REQ {p. 12086}	LV_VCV_SL_ENA {p. 12184}	MFF_SP_FUP_CTL {p. 11463}
N_32 {p. 8079}	R_VCV {p. 11815}	T_AST {p. 8436}	T_SEG_AV {p. 8036}
TCO {p. 8846}	TFPA {p. 12089}	TFU_HPP {p. 11817}	VB {p. 24055}

Calibration Data

Name	Mode	Coded Limits	Display Limits	Resolution	Unit
C_ANG_CUR_OFF_VCV	V	800... F800H	-720 ...720	0.0234375	°CRK
Angle to end current feed of the VCV (volume control valve)					
C_ANG_CUR_OFF_VCV_MIN	V	0... FFFFH	0... 1535.9765625	0.0234375	°CRK
Minimal VCV angle for current shut-off					
C_ANG_CUR_ON_VCV	V	0... FFFFH	0... 1535.9765625	0.0234375	°CRK
Angle to begin current feed of the VCV (volume control valve)					
C_ANG_REF_VCV	V	0... FFFFH	0... 1535.9765625	0.0234375	°CRK
Relative crank angle displacement between TDC on Cyl.0 and OT of single piston pump					
C_CTR_FUP_DIF_HYS_MAX_AUTH	V	0... FFH	0... 255	1	-
threshold of pressure decreases after finished adaptation to reset adaptation					
C_CTR_FUP_DIF_VCV_SL_AUTH_MAX	V	0... FFFFH	0... 65535	1	-
number of segments soft landing is authorized without pressure decreases to force reset of pressure decrease counter					
C_CTR_MAX_VCV_CLOSE_SL_AD_PWM	V	0... FFH	0... 255	1	-
Threshold for end of PWM adaptation for VCV closing					
C_CTR_MAX_VCV_CLOSE_SL_AD_T_DUR	V	0... FFH	0... 255	1	-

Copyright ©Continental AG. Transmittal, reproduction, dissemination and/or editing of this document as well as utilisation of its contents and communication thereof to others without expressed authorisation are prohibited. Offenders will be held liable for payment of damages. All rights created by patent grant or registration of a utility model or design patent are reserved.

Name	Mode	Coded Limits	Display Limits	Resolution	Unit
Threshold for end of pull-in time (T_DUR) adaptation for VCV closing					
C_CUR_HYS_VCV_CTL_PEAK	V	0... FFFFH	0... 65.535	0.001	A
Hysteresis for current set point during peak phase					
C_CUR_VCV_CTL_0	V	0... FFFFH	0... 65.535	0.001	A
Current set point for VCV pick-up phase					
C_CUR_VCV_CTL_1	V	0... FFFFH	0... 65.535	0.001	A
Current set point for VCV holding phase					
C_CUR_VCV_CTL_DEACC	V	0... FFFFH	0... 65.535	0.001	A
Current set point for current feed during VCV opening					
C_CUR_VCV_CTL_HOLD	V	0... FFFFH	0... 65.535	0.001	A
Set point for VCV current closed loop control during holding phase					
C_CUR_VCV_CTL_PEAK	V	0... FFFFH	0... 65.535	0.001	A
Current set point for pull-in phase of VCV control pulse					
C_CUR_VCV_CTL_PEAK_ST	V	0... FFFFH	0... 65.535	0.001	A
Current set point for pull-in phase of VCV control pulse at engine start					
C_CUR_VCV_CTL_ST	V	0... FFFFH	0... 65.535	0.001	A
Current set point of VCV control at pulse mode at START phase					
C_CUR_VCV_DEACC_PEAK	V	0... FFFFH	0... 65.535	0.001	A
Current set point for pull-in phase of VCV deacceleration pulse					
C_CUR_VCV_OPL_CTL_MAX	V	0... FFFFH	0... 65.535	0.001	A
Maximum current set point of VCV control pulse during open loop current control mode					
C_FAC_FUEL_PUMP_CTL	V	0... FFFFH	0... 7.999877929688	122.07e-6	-
High pressure pump recurrence rate for the calculation of the final fuel mass request					
C_FRQ_PWM_VCV_CTL_0	V	1F4... 2710H	500... 10000	1	Hz
Duty cycle frequency for VCV pick-up phase					
C_FRQ_PWM_VCV_CTL_0_SL	V	1F4... 2710H	500... 10000	1	Hz
Duty cycle frequency for VCV pick-up phase for soft landing during VCV closing					
C_FRQ_PWM_VCV_CTL_1	V	1F4... 2710H	500... 10000	1	Hz
Duty cycle frequency for VCV holding phase					
C_FRQ_PWM_VCV_CTL_DEACC	V	1F4... 2710H	500... 10000	1	Hz
Duty cycle frequency for current feed during VCV opening					
C_FRQ_PWM_VCV_CTL_PEAK	V	1F4... 2710H	500... 10000	1	Hz
Duty cycle for pull-in phase of VCV control pulse					
C_FRQ_PWM_VCV_CTL_PEAK_ST	V	1F4... 2710H	500... 10000	1	Hz
Duty cycle frequency for pull-in phase of VCV control pulse at engine start					
C_FRQ_PWM_VCV_CTL_ST	V	1F4... 2710H	500... 10000	1	Hz
Duty cycle frequency of VCV control at pulse mode at START phase					
C_FRQ_PWM_VCV_CUR_OPL_CTL	V	1F4... 2710H	500... 10000	1	Hz
Duty cycle frequency applied for all VCV current control phases during open loop control					
C_FRQ_PWM_VCV_DEACC_PEAK	V	1F4... 2710H	500... 10000	1	Hz
Duty cycle frequency for pull-in phase of VCV deacceleration pulse					
C_FUP_DIF_VCV_CLOSE_SL_AD_PWM	V	8000... 7FFFH	-173890 ...173884	5.30669108	hPa
Maximum fuel pressure difference during PWM adaptation for VCV closing					
C_FUP_DIF_VCV_CLOSE_SL_AD_T_DUR	V	8000... 7FFFH	-173890 ...173884	5.30669108	hPa
Maximum fuel pressure difference during pull-in (T_DUR) adaptation for VCV closing					

Copyright ©Continental AG. Transmittal, reproduction, dissemination and/or editing of this document as well as utilisation of its contents and communication thereof to others without expressed authorisation are prohibited. Offenders will be held liable for payment of damages. All rights created by patent grant or registration of a utility model or design patent are reserved.

Name	Mode	Coded Limits	Display Limits	Resolution	Unit
C_FUP_DIF_VCV_CLOSE_SL_HYS_MAX	V	8000... 7FFFH	-173890 ...173884	5.30669108	hPa
Maximum fuel pressure difference for activation of VCV soft landing during closing					
C_FUP_DIF_VCV_CLOSE_SL_HYS_MIN	V	8000... 7FFFH	-173890 ...173884	5.30669108	hPa
Minimum fuel pressure difference for activation of VCV soft landing during closing					
C_FUP_DIF_VCV_OPEN_SL_HYS_MAX	V	8000... 7FFFH	-173890 ...173884	5.30669108	hPa
Maximum fuel pressure difference for activation of VCV soft landing during opening					
C_FUP_DIF_VCV_OPEN_SL_HYS_MIN	V	8000... 7FFFH	-173890 ...173884	5.30669108	hPa
Minimum fuel pressure difference for activation of VCV soft landing during opening					
C_FUP_DIF_VCV_OPEN_THD	V	8000... 7FFFH	-173890 ...173884	5.30669108	hPa
Threshold of fuel pressure difference for requesting VCV_OPEN state					
C_FUP_DIF_VCV_SL_AD_AUTH	V	8000... 7FFFH	-173890 ...173884	5.30669108	hPa
Allowed fuel pressure difference for VCV soft landing adaptation during closing					
C_FUP_MAX_VCV_SL_AD_AUTH	V	0... FFFFH	0... 347776	5.3067216	hPa
Maximum allowed fuel high pressure for VCV soft landing adaptation during closing					
C_FUP_MIN_LOCK_VCV	V	0... FFFFH	0... 347776	5.3067216	hPa
Minimum rail pressure for self locking of the VCV					
C_FUP_OFS_MFP_MAX	V	8000... 7FFFH	-173890 ...173884	5.30669108	hPa
FUP offset for high pressure start					
C_FUP_SP_GRD_VCV_SL_AD_AUTH	V	8000... 7FFFH	-173890 ...173884	5.30669108	hPa
Allowed fuel pressure setpoint gradient for VCV soft landing adaptation during closing					
C_MFP_MAX	V	0... FFFFH	0... 1389	0.02119478	mg
Maximum fuel flow delivered by the pump within one pump stroke					
C_MFP_REQ_MAX	V	0... FFFFH	0... 1389	0.02119478	mg
MFP_REQ max threshold for small quantity regulation					
C_MFP_REQ_MIN	V	0... FFFFH	0... 1389	0.02119478	mg
MFP_REQ min threshold for small quantity regulation					
C_N_MAX_ACT_ANG_VCV_OPEN_ADD	V	0... FFH	0... 8160	32	rpm
Maximum engine speed for activate angle based calculation of VCV_OPEN_ADD					
C_N_MAX_VCV_SL_AD_AUTH	V	0... FFH	0... 8160	32	rpm
Maximum allowed engine speed for VCV soft landing adaptation during closing					
C_N_VCV_CLOSE_SL_HYS_MAX	V	0... FFH	0... 8160	32	rpm
Maximum engine speed for VCV soft landing during closing					
C_N_VCV_CLOSE_SL_HYS_MIN	V	0... FFH	0... 8160	32	rpm
Minimum engine speed for VCV soft landing during closing					
C_N_VCV_OPEN_SL_HYS_MAX	V	0... FFH	0... 8160	32	rpm
Maximum engine speed for VCV soft landing during opening					
C_N_VCV_OPEN_SL_HYS_MIN	V	0... FFH	0... 8160	32	rpm
Minimum engine speed for VCV soft landing during opening					
C_PUMP_NR	V	0... 1H	0 ...1	1	-
Pump identifier					
C_PUMP_VOL_VCV_MAN	V	0... FFFFH	0... 99.99847412109	0.00152588	%
Manual PUMP_VOL_VCV					
C_PWM_AD_OFS_VCV_CLOSE_SL_REQ	V	0... 4000H	0... 100	0.00610352	%
Duty cycle offset applied to PWM value at re-adaptation request					
C_PWM_INC_VCV_CLOSE_SL_AD	V	0... 4000H	0... 100	0.00610352	%

Copyright ©Continental AG. Transmittal, reproduction, dissemination and/or editing of this document as well as utilisation of its contents and communication thereof to others without expressed authorisation are prohibited. Offenders will be held liable for payment of damages. All rights created by patent grant or registration of a utility model or design patent are reserved.

Name	Mode	Coded Limits	Display Limits	Resolution	Unit
Duty cycle increment applied to PWM value during adaptation					
C_PWM_MAX_COR_VCV_CTL_1	V	0... 4000H	0... 100	0.00610352	%
Limitation of value for correction duty cycle during VCV holding phase for duty cycle based on closing adaptation					
C_PWM_OFS_VCV_CLOSE_SL_AD	V	0... 4000H	0... 100	0.00610352	%
Duty cycle offset applied to PWM value after adaptation					
C_PWM_OFS_VCV_CTL_PULSE_SL_AD	V	0... 4000H	0... 100	0.00610352	%
Offset to difference of applied and stored adaptation value for duty cycle during VCV holding phase					
C_PWM_VCV_CTL_0	V	0... 4000H	0... 100	0.00610352	%
Duty cycle for VCV pick-up phase					
C_PWM_VCV_CTL_1	V	0... 4000H	0... 100	0.00610352	%
Duty cycle for VCV holding phase					
C_PWM_VCV_CTL_DEACC	V	0... 4000H	0... 100	0.00610352	%
Duty cycle for current feed during VCV opening					
C_PWM_VCV_CTL_PEAK	V	0... 4000H	0... 100	0.00610352	%
Duty cycle for pull-in phase of VCV control pulse					
C_PWM_VCV_CTL_PEAK_ST	V	0... 4000H	0... 100	0.00610352	%
Duty cycle for pull-in phase of VCV control pulse at engine start					
C_PWM_VCV_CTL_ST	V	0... 4000H	0... 100	0.00610352	%
Duty cycle of VCV control at pulse mode at START phase					
C_PWM_VCV_DEACC_PEAK	V	0... 4000H	0... 100	0.00610352	%
Duty cycle for pull-in phase of VCV deacceleration pulse					
C_R_DIF_MAX_CLOSE_SL_RST	V	0... FFFFH	0... 15.99975585938	244.141e-6	Ohm
Fuel pressure actuator resistance threshold for reset of close adaptation in an adapted system					
C_R_DIF_MAX_CLOSE_SL_RST_AD	V	0... FFFFH	0... 15.99975585938	244.141e-6	Ohm
Fuel pressure actuator resistance threshold for reset of close adaptation during active adaptation					
C_R_DIF_MAX_VCV_CLOSE_SL_REQ	V	0... FFFFH	0... 15.99975585938	244.141e-6	Ohm
Fuel pressure actuator resistance threshold for re-adaptation request					
C_STATE_VCV_CLOSE_SL_OPEN_AUTH	V	0H 1H 2H 3H 4H	OFF STAT AD_PWM AD_T_DUR AD_ON	-	-
Minimum VCV close soft landing state for activation of soft landing in opening VCV					
C_T_AST_VCV_SL_MIN	V	0... FFFFH	0... 6553.5	0.1	s
Minimum after start time for activation of VCV soft landing					
C_T_DEACC_OFF_VCV	V	0... FFFFH	0... 262.14	0.004	ms
Time after VCV control pulse, where no current is applied on VCV					
C_T_DEACC_ON_VCV	V	0... FFFFH	0... 262.14	0.004	ms
Duration of current pulse during VCV opening					
C_T_DLY_OFS_VCV_CTL_AD_ACT	V	0... FFFFH	0... 262.14	0.004	ms
Time delay between VCV closing and start of 2nd PWM phase during active adaptation					
C_T_DLY_OFS_VCV_CTL_AD_ON	V	0... FFFFH	0... 262.14	0.004	ms
Time delay between VCV closing and start of 2nd PWM phase after adaptation					
C_T_DLY_VCV_CLOSE_SL_AD_AUTH	V	0... FFFFH	0... 655.35	0.01	s

Copyright ©Continental AG. Transmittal, reproduction, dissemination and/or editing of this document as well as utilisation of its contents and communication thereof to others without expressed authorisation are prohibited. Offenders will be held liable for payment of damages. All rights created by patent grant or registration of a utility model or design patent are reserved.

Name	Mode	Coded Limits	Display Limits	Resolution	Unit
Time delay for activation of VCV soft landing adaptation during closing					
C_T_DLY_VCV_CLOSE_SL_AUTH	V	0... FFFFH	0... 655.35	0.01	s
Time delay for activation of VCV soft landing during closing					
C_T_DLY_VCV_OPEN_SL_AUTH	V	0... FFFFH	0... 655.35	0.01	s
Time delay for activation of VCV soft landing during opening					
C_T_DUR_AD_OFS_VCV_CLOSE_SL_REQ	V	0... FFFFH	0... 65.535	0.001	ms
Pull-in time offset applied to T_DUR value at re-adaptation request					
C_T_DUR_INC_VCV_CLOSE_SL_AD	V	0... FFFFH	0... 65.535	0.001	ms
Pull-in time increment applied to T_DUR value during adaptation					
C_T_DUR_MAX	V	0... 3FFFH	0... 16383	1	ms
Safety time limitation for MflStart action in START-phase					
C_T_DUR_OFS_VCV_CLOSE_SL_AD	V	0... FFFFH	0... 65.535	0.001	ms
Pull-in time offset applied to T_DUR value after adaptation					
C_T_DUR_VCV_CTL_0_FW	V	0... FFFFH	0... 262.14	0.004	ms
Duration for freewheeling phase after VCV pick-up phase					
C_T_DUR_VCV_CTL_DEACC	V	0... FFFFH	0... 262.14	0.004	ms
Duration of "Pull-In" Phase during VCV opening					
C_T_DUR_VCV_CTL_FW	V	0... FFFFH	0... 262.14	0.004	ms
Time for VCV current freewheeling phase after VCV closing pulse					
C_T_DUR_VCV_CTL_HOLD_0	V	0... FFFFH	0... 262.14	0.004	ms
Duration between start of VCV current feed and switch to 2nd duty cycle					
C_T_DUR_VCV_CTL_PEAK	V	0... FFFFH	0... 262.14	0.004	ms
Duration of "Pull-In" Phase					
C_T_DUR_VCV_CTL_PEAK_CLOSE_SL	V	0... FFFFH	0... 262.14	0.004	ms
Duration of pull-in time for VCV actuation during active soft landing in case of soft landing adaptiona during VCV closing 'OFF', 'STAT' or 'AD_PWM'					
C_T_DUR_VCV_CTL_ST	V	0... FFFFH	0... 65.535	0.001	ms
Duration of pull-in phase of VCV control at pulse mode at START phase					
C_T_DUR_VCV_DEACC	V	0... FFFFH	0... 65.535	0.001	ms
Duration of VCV opening (deacceleration) pulse					
C_T_DUR_VCV_DEACC_FW	V	0... FFFFH	0... 262.14	0.004	ms
Time for VCV current freewheeling phase after VCV opening pulse					
C_T_MAX_FUP_MIN	V	0... FFFFH	0... 1310.7	0.02	s
Maximum time for extension of VCV hold phase at small rail pressure					
C_T_MAX_VCV_CLOSE_SL_AD_VLD	V	0... FFFFH	0... 65535	1	s
threshold to trigger reset of soft landing adaptation since last finished adaptation					
C_T_OFS_VCV_CTL_SL	V	0... FFFFH	0... 262.14	0.004	ms
Offset time during soft closing of VCV					
C_T_PLS_DIAG_VCV	V	0... FFFFH	0... 65.535	0.001	ms
Pulse duration of the test pulse for the VCV diagnosis during overrun fuel cutoff					
C_T_VCV_ACR_ACT	V	0... 64H	0 ...1	0.01	s
Time for VCV actuation during actuator test					
C_T_VCV_CTL_ST	V	0... FFFFH	0... 262.14	0.004	ms
Duration of "Pull-In" phase during timebased actuation					
C_T_VCV_MFP_START	V	0... FFFFH	0... 655.35	0.01	s
Time delay for leaving the MFP_START phase					

Copyright ©Continental AG. Transmittal, reproduction, dissemination and/or editing of this document as well as utilisation of its contents and communication thereof to others without expressed authorisation are prohibited. Offenders will be held liable for payment of damages. All rights created by patent grant or registration of a utility model or design patent are reserved.

Name	Mode	Coded Limits	Display Limits	Resolution	Unit
C_TCO_VCV_SL_MAX	V	0... FEH	-48... 142.5	0.75	°C
Maximum engine coolant temperature for activation of VCV soft landing					
C_TCO_VCV_SL_MIN	V	0... FEH	-48... 142.5	0.75	°C
Minimum engine coolant temperature for activation of VCV soft landing					
C_VB_DIF_MAX_CLOSE_SL_RST	V	0... FFH	0... 25.8984375	0.1015625	V
Battery voltage threshold for reset of close adaptation in an adapted system					
C_VB_DIF_MAX_CLOSE_SL_RST_AD	V	0... FFH	0... 25.8984375	0.1015625	V
Battery voltage threshold for reset of close adaptation during active adaptation					
C_VB_DIF_MAX_VCV_CLOSE_SL_REQ	V	0... FFH	0... 25.8984375	0.1015625	V
Battery voltage threshold for re-adaptation request					
C_VB_VCV_SL_MIN	V	0... FFH	0... 25.8984375	0.1015625	V
Minimum battery voltage for activation of VCV soft landing					
C_VCV_CLOSE_BAS	V	FC40... 3C0H	-360 ...360	0.375	°CRK
Basic angle for closing the control valve					
C_VCV_CLOSE_RNG_MIN_CLL_CTL	V	0... 780H	0... 720	0.375	°CRK
Minimum control angle to enable actuation of VCV					
CLF_CUR_CTL_MOD_VCV	V	0... FFH	0... 255	1	-
Closed loop control for VCV current will be applied for a certain pulse phase, if the related bit is set (bit 0: VCV_CTL_PEAK, bit 1: VCV_CTL_0, bit 2: VCV_CTL_1, bit 3: VCV_DEACC_PEAK, bit 4: VCV_CTL_DEACC, bit 5: VCV_CTL_PEAK_ST, bit 6: VCV_CTL_ST)					
CLF_CUR_CTL_MOD_VCV_SL	V	0... FFH	0... 255	1	-
Closed loop control for VCV current during soft closing will be applied for a certain pulse phase, if the related bit is set (bit 0: VCV_CTL_PEAK, bit 1: VCV_CTL_0, bit 2: VCV_CTL_1, bit 3: VCV_DEACC_PEAK, bit 4: VCV_CTL_DEACC, bit 5: VCV_CTL_PEAK_ST, bi					
CLF_CUR_CTL_MOD_VCV_TEST	V	0... FFH	0... 255	1	-
Defines the phase specific test mode for closed-loop current control. If the related bit is set, the current set point is transferred into its related PWM value, otherwise the PWM value can be set directly					
IP_ANG_CUR_OFF_VCV_MIN	V	0... FFFFH	0... 1535.9765625	0.0234375	°CRK
LDP_VB_IP_ANG_CUR_OFF_VCV_MIN	7	0... FFH	0... 25.8984375	0.1015625	V
Minimal VCV angle for current shut-off					
IP_ANG_CUR_OFF_VCV_OPEN_SL	V	800... F800H	-720 ...720	0.0234375	°CRK
LDPM_FUP_2_FUSL	8	0... FFFFH	0... 347776	5.3067216	hPa
Angle to end current feed of the VCV during soft landing in VCV opening					
IP_ANG_VCV_CTL_BAS_TYP_2	V	0... FFFFH	0... 1535.9765625	0.0234375	°CRK
LDP_N_32_IP_ANG_VCV_CTL_BAS_TYP_2	6	0... FFH	0... 8160	32	rpm
Basic current feed angle of the VCV depending on engine speed					
IP_ANG_VCV_CTL_HOLD	V	0... FFFFH	0... 1535.9765625	0.0234375	°CRK
LDP_N_IP_ANG_VCV_CTL_HOLD	6	0... FFH	0... 8160	32	rpm
VCV holding angle depending on engine speed					
IP_CUR_VCV_CTL_HOLD_ST_TYP_2	V	0... FFFFH	0... 65.535	0.001	A
LDPM_VB_IP_CUR_VCV_CTL_ST_TYP_2	7	0... FFH	0... 25.8984375	0.1015625	V
Set point for VCV current closed loop control during peak phase at engine start					
IP_CUR_VCV_CTL_HOLD_TYP_2	V	0... FFFFH	0... 65.535	0.001	A
LDPM_VB_IP_CUR_VCV_CTL_TYP_2	7	0... FFH	0... 25.8984375	0.1015625	V
Set point for VCV current closed loop control during holding phase					
IP_CUR_VCV_CTL_PEAK	V	0... FFFFH	0... 65.535	0.001	A
LDP_VB_IP_CUR_VCV_CTL_PEAK	5	0... FFH	0... 25.8984375	0.1015625	V
LDP_N_IP_CUR_VCV_CTL_PEAK	6	0... FFH	0... 8160	32	rpm
Set point for VCV current closed loop control during peak phase					

Copyright ©Continental AG. Transmittal, reproduction, dissemination and/or editing of this document as well as utilisation of its contents and communication thereof to others without expressed authorisation are prohibited. Offenders will be held liable for payment of damages. All rights created by patent grant or registration of a utility model or design patent are reserved.

Name	Mode	Coded Limits	Display Limits	Resolution	Unit
IP_CUR_VCV_CTL_PEAK_ST_TYP_2	V	0... FFFFH	0... 65.535	0.001	A
LDPM_VB_IP_CUR_VCV_CTL_ST_TYP_2	7	0... FFH	0... 25.8984375	0.1015625	V
Set point for VCV current closed loop control during peak phase at engine start					
IP_CUR_VCV_CTL_PEAK_TYP_2	V	0... FFFFH	0... 65.535	0.001	A
LDPM_VB_IP_CUR_VCV_CTL_TYP_2	7	0... FFH	0... 25.8984375	0.1015625	V
Set point for VCV current closed loop control during peak phase					
IP_CUR_VCV_OPL_CTL_MAX	V	0... FFFFH	0... 65.535	0.001	A
LDP_PWM_IP_CUR_VCV_OPL_CTL_MAX	4	0... 4000H	0... 100	0.00610352	%
LDP_TFPA_IP_CUR_VCV_OPL_CTL_MAX	4	0... FFH	-50 ...205	1	°C
Maximum current set point of VCV control pulse during open loop current control mode					
IP_FAC_ANG_VCV_CTL_TYP_2	V	0... C8H	0 ...2	0.01	-
LDP_VB_IP_FAC_ANG_VCV_CTL_TYL_2	5	0... FFH	0... 25.8984375	0.1015625	V
Correction factro of current feed angle of the VCV depending on voltage battery					
IP_FAC_CLOSE_RNG_PWM_VCV_CTL	V	0... C8H	0 ...2	0.01	-
LDPM_N_32_IP_T_DLY_VCV_OPEN_ADD	8	0... FFH	0... 8160	32	rpm
LDPM_CLOSE_RNG_PWM_VCV_CTL	10	0... 780H	0... 720	0.375	°CRK
Factor for Duty cycle of VCV control depending on VCV close range					
IP_FAC_CLOSE_RNG_VCV_OPEN_ADD	V	0... C8H	0 ...2	0.01	-
LDPM_N_32_IP_T_DLY_VCV_OPEN_ADD	8	0... FFH	0... 8160	32	rpm
LDPM_CLOSE_RNG_PWM_VCV_CTL	10	0... 780H	0... 720	0.375	°CRK
Factor for closing angle depending on VCV close range					
IP_FAC_COR_PWM_VCV_CTL_1	V	0... FFFFH	0... 7.999877929688	122.07e-6	-
LDPM_VB_1_FUSL	8	0... FFH	0... 25.8984375	0.1015625	V
LDPM_R_VCV_1_FUSL	6	0... FFFFH	0... 15.99975585938	244.141e-6	Ohm
Correction of applied adaptation value for duty cycle during VCV holding phase for duty cycle based on closing adaptation					
IP_FAC_FUEL_PUMP_EFF_FUP_N	V	0... FFH	0... 0.99609375	0.00390625	-
LDPM_N_32_3_FUSL	8	0... FFH	0... 8160	32	rpm
LDPM_FUP_2_FUSL	8	0... FFFFH	0... 347776	5.3067216	hPa
Efficiency of the fuel pump depending on N and FUP					
IP_FAC_FUEL_PUMP_EFF_MFF_SP_N	V	0... FFH	0... 0.99609375	0.00390625	-
LDPM_N_32_3_FUSL	8	0... FFH	0... 8160	32	rpm
LDP_MFF_SP_FUP_CTL_IP_FAC_FUEL	8	0... FFFFH	0... 1389	0.02119478	mg/stk
Efficiency of the fuel pump depending on N and MFF_SP					
IP_FAC_FUEL_PUMP_EFF_TFU_N	V	0... FFH	0... 0.99609375	0.00390625	-
LDPM_N_32_3_FUSL	8	0... FFH	0... 8160	32	rpm
LDPM_TFU_IP_FAC_FUEL_PUMP_EFF	4	0... FEH	-48... 142.5	0.75	°C
Efficiency of the fuel pump depending on TFU					
IP_FAC_T_DLY_VCV_CLOSE_ADD_VB	V	0... C8H	0 ...2	0.01	-
LDPM_N_32_IP_T_DLY_VCV_OPEN_ADD	8	0... FFH	0... 8160	32	rpm
LDPM_VCV_CLOSE_RNG	10	0... 780H	0... 720	0.375	°CRK
Factor for battery voltage correction of VCV delay time					
IP_FAC_T_DUR_VCV_CTL_PEAK	V	0... C8H	0 ...2	0.01	-
LDP_N_IP_FAC_T_DUR_VCV_CTL_PEAK	6	0... FFH	0... 8160	32	rpm
LDP_VCV_CLOSE_RNG_IP_FAC_T_PEAK	4	0... 780H	0... 720	0.375	°CRK
Correction factor for base pull-in time					

Copyright ©Continental AG. Transmittal, reproduction, dissemination and/or editing of this document as well as utilisation of its contents and communication thereof to others without expressed authorisation are prohibited. Offenders will be held liable for payment of damages. All rights created by patent grant or registration of a utility model or design patent are reserved.

Name	Mode	Coded Limits	Display Limits	Resolution	Unit
IP_FAC_T_DUR_VCV_CTL_PEAK_TYP_2	V	0... C8H	0 ...2	0.01	-
LDP_VB_IP_FAC_T_DUR_VCV_CTL_PEAK_TYP_2	5	0... FFH	0... 25.8984375	0.1015625	V
Correction factor for base pull-in time					
IP_FAC_T_DUR_VCV_PEAK_ST_TYP_2	V	0... C8H	0 ...2	0.01	-
LDP_VB_IP_FAC_T_DUR_VCV_PEAK_ST_TYP_2	5	0... FFH	0... 25.8984375	0.1015625	V
Correction factor for base pull-in time at engine start					
IP_FAC_T_VCV_CLOSE_ADD_TYP_2	V	0... C8H	0 ...2	0.01	-
LDP_VB_IP_FAC_T_VCV_CLOSE_ADD_TYP_2	8	0... FFH	0... 25.8984375	0.1015625	V
Correction factor of additional delay time for closing of the VCV					
IP_FAC_TFPA_PWM_VCV_CTL	V	0... C8H	0 ...2	0.01	-
LDPM_TFPA_FAC_PWM_VCV_CTL_2	6	0... FFH	-50 ...205	1	°C
Factor for Duty cycle of VCV control depending on Fuel pressure actuator temperature					
IP_FAC_TFPA_PWM_VCV_CTL_ST	V	0... C8H	0 ...2	0.01	-
LDPM_TFPA_FAC_PWM_VCV_CTL_2	6	0... FFH	-50 ...205	1	°C
Factor for duty cycle of VCV control depending on Fuel pressure actuator temperature during 'MFP_START'					
IP_FAC_TFPA_VCV_OPEN_ADD	V	0... C8H	0 ...2	0.01	-
LDPM_TFPA_FAC_PWM_VCV_CTL	3	0... FFH	-50 ...205	1	°C
Factor for closing angle depending on Fuel pressure actuator temperature					
IP_FAC_TFU_T_DUR_VCV_CTL	V	0... C8H	0 ...2	0.01	-
LDPM_TFPA_FAC_PWM_VCV_CTL	3	0... FFH	-50 ...205	1	°C
Factor for VCV time delay depending on temperature influence					
IP_FAC_VB_T_DUR_VCV_CTL	V	0... C8H	0 ...2	0.01	-
LDP_VB_FAC_T_DUR_VCV_CTL	6	0... FFH	0... 25.8984375	0.1015625	V
Factor for VCV time delay depending on battery voltage					
IP_FRQ_PWM_VCV_CTL_HOLD_TYP_2	V	1F4... 2710H	500... 10000	1	Hz
LDPM_VB_IP_CUR_VCV_CTL_TYP_2	7	0... FFH	0... 25.8984375	0.1015625	V
Duty cycle frequency for hold phase of VCV control pulse					
IP_FRQ_PWM_VCV_CTL_PEAK_TYP_2	V	1F4... 2710H	500... 10000	1	Hz
LDPM_VB_IP_CUR_VCV_CTL_TYP_2	7	0... FFH	0... 25.8984375	0.1015625	V
Duty cycle frequency for pull-in phase of VCV control pulse					
IP_FRQ_PWM_VCV_HOLD_ST_TYP_2	V	1F4... 2710H	500... 10000	1	Hz
LDPM_VB_IP_CUR_VCV_CTL_ST_TYP_2	7	0... FFH	0... 25.8984375	0.1015625	V
Duty cycle frequency for hold phase of VCV control pulse at engine start					
IP_FRQ_PWM_VCV_PEAK_ST_TYP_2	V	1F4... 2710H	500... 10000	1	Hz
LDPM_VB_IP_CUR_VCV_CTL_ST_TYP_2	7	0... FFH	0... 25.8984375	0.1015625	V
Duty cycle frequency for pull-in phase of VCV control pulse at engine start					
IP_MFP_OFS	V	0... FFFFH	-694.5... 694.478806	0.02119446	mg
LDPM_N_32_3_FUSL	8	0... FFH	0... 8160	32	rpm
LDPM_FUP_2_FUSL	8	0... FFFFH	0... 347776	5.3067216	hPa
Fuel mass offset due to internal pump behaviour					
IP_MFP_OFS_TFU_ADD	V	0... FFFFH	-694.5... 694.478806	0.02119446	mg
LDPM_TFU_IP_FAC_FUEL_PUMP_EFF	4	0... FEH	-48... 142.5	0.75	°C
LDPM_FUP_2_FUSL	8	0... FFFFH	0... 347776	5.3067216	hPa
Additive fuel mass offset					
IP_PWM_CUR_VCV_REQ	V	0... 4000H	0... 100	0.00610352	%

Copyright ©Continental AG. Transmittal, reproduction, dissemination and/or editing of this document as well as utilisation of its contents and communication thereof to others without expressed authorisation are prohibited. Offenders will be held liable for payment of damages. All rights created by patent grant or registration of a utility model or design patent are reserved.

Name	Mode	Coded Limits	Display Limits	Resolution	Unit
LDP_CUR_VCV_REQ	2	0... FFFFH	0... 65.535	0.001	A
Curve defining the HW transfer function of closed loop current control between VCV current set point and PWM duty cycle					
IP_PWM_VCV_CTL_0_SL	V	0... 4000H	0... 100	0.00610352	%
LDP_VB_IP_PWM_VCV_CTL_0_SL	5	0... FFH	0... 25.8984375	0.1015625	V
LDP_TFPA_IP_PWM_VCV_CTL_0_SL	4	0... FFH	-50 ...205	1	°C
Duty cycle for VCV pick-up phase during soft closing					
IP_PWM_VCV_CTL_2_BAS	V	0... 4000H	0... 100	0.00610352	%
LDPM_VB_1_FUSL	8	0... FFH	0... 25.8984375	0.1015625	V
LDPM_R_VCV_1_FUSL	6	0... FFFFH	0... 15.99975585938	244.141e-6	Ohm
Basic duty cycle for VCV actuation during VCV holding phase					
IP_PWM_VCV_CTL_DEACC_AD_OFS	V	0... 4000H	0... 100	0.00610352	%
LDPM_PWM_VCV_CLOSE_SL_AD	8	0... 4000H	0... 100	0.00610352	%
LDPM_VB_1_FUSL	8	0... FFH	0... 25.8984375	0.1015625	V
Duty cycle offset for VCV actuation during VCV opening phase					
IP_PWM_VCV_CTL_DEACC_BAS	V	0... 4000H	0... 100	0.00610352	%
LDPM_VB_1_FUSL	8	0... FFH	0... 25.8984375	0.1015625	V
LDPM_R_VCV_1_FUSL	6	0... FFFFH	0... 15.99975585938	244.141e-6	Ohm
Basic duty cycle for VCV actuation during VCV opening phase					
IP_PWM_VCV_CTL_PULSE	V	0... 4000H	0... 100	0.00610352	%
LDPM_VB_1_FUSL	8	0... FFH	0... 25.8984375	0.1015625	V
LDPM_N_32_IP_T_DLY_VCV_OPEN_ADD	8	0... FFH	0... 8160	32	rpm
Duty cycle of VCV control at pulse mode for pump type H3					
IP_PWM_VCV_CTL_PULSE_SL	V	0... 4000H	0... 100	0.00610352	%
LDPM_VB_1_FUSL	8	0... FFH	0... 25.8984375	0.1015625	V
LDPM_R_VCV_1_FUSL	6	0... FFFFH	0... 15.99975585938	244.141e-6	Ohm
Duty cycle for VCV actuation during VCV pick-up phase at active soft landing					
IP_PWM_VCV_CTL_PULSE_SL_AD	V	0... 4000H	0... 100	0.00610352	%
LDP_PWM_IP_PWM_VCV_CTL_PULSE_SL_AD	6	0... 4000H	0... 100	0.00610352	%
Duty cycle for VCV actuation during VCV pick-up phase at inactive soft landing					
IP_PWM_VCV_CTL_PULSE_ST	V	0... 4000H	0... 100	0.00610352	%
LDPM_VB_PWM_VCV_CTL_PULSE_ST	4	0... FFH	0... 25.8984375	0.1015625	V
Duty cycle of VCV control at time mode					
IP_PWM_VCV_CTL_SL_AD_END	V	0... 4000H	0... 100	0.00610352	%
LDP_VB_IP_PWM_VCV_CTL_SL_AD_END	8	0... FFH	0... 25.8984375	0.1015625	V
LDPM_R_VCV_1_FUSL	6	0... FFFFH	0... 15.99975585938	244.141e-6	Ohm
Correction of adaptated value to applied value for duty cycle during VCV holding phase depending on battery voltage and temperature of fuel pressure actuator					
IP_T_DEACC_OFF_VCV_AD_OFS	V	0... FFFFH	-131.072 ...131.068	0.004	ms
LDPM_PWM_VCV_CLOSE_SL_AD	8	0... 4000H	0... 100	0.00610352	%
LDPM_VB_1_FUSL	8	0... FFH	0... 25.8984375	0.1015625	V
Duration offset for deactivation of VCV current feed before opening phase					
IP_T_DEACC_OFF_VCV_BAS	V	0... FFFFH	0... 262.14	0.004	ms
LDPM_VB_1_FUSL	8	0... FFH	0... 25.8984375	0.1015625	V

Copyright ©Continental AG. Transmittal, reproduction, dissemination and/or editing of this document as well as utilisation of its contents and communication thereof to others without expressed authorisation are prohibited. Offenders will be held liable for payment of damages. All rights created by patent grant or registration of a utility model or design patent are reserved.

Name	Mode	Coded Limits	Display Limits	Resolution	Unit
LDPM_R_VCV_1_FUSL	6	0... FFFFH	0... 15.99975585938	244.141e-6	Ohm
Basic Duration for deactivation of VCV current feed before opening phase					
IP_T_DLY_VB_ADD	V	0... FFFFH	0... 262.14	0.004	ms
LDPM_VB_1_FUSL	8	0... FFH	0... 25.8984375	0.1015625	V
Additive delay time for VCV actuation dependent to battery voltage					
IP_T_DLY_VCV_CLOSE_ADD_3	V	0... FFFFH	0... 262.14	0.004	ms
LDPM_N_32_IP_T_DLY_VCV_OPEN_ADD	8	0... FFH	0... 8160	32	rpm
LDP_VCV_CLOSE_RNG_CLOSE_ADD	10	0... 780H	0... 720	0.375	°CRK
Offset for the closing angle of the control valve due to delay time					
IP_T_DLY_VCV_CLOSE_SL_PWM	V	0... FFFFH	0... 262.14	0.004	ms
LDP_PWM_IP_T_DLY_VCV_CLOSE_SL	8	0... 4000H	0... 100	0.00610352	%
Additional delay time for VCV closing during active soft landing depending on adaptation value for duty cycle during VCV holding phase					
IP_T_DLY_VCV_CLOSE_SL_T_DUR	V	0... FFFFH	-131.072 ...131.068	0.004	ms
LDP_T_IP_T_DLY_VCV_CLOSE_SL	8	0... FFFFH	0... 65.535	0.001	s
Additional delay time for VCV closing during active soft landing depending on adaptation value for pull-in time during VCV closing phase					
IP_T_DLY_VCV_CTL_SL	V	0... FFFFH	0... 262.14	0.004	ms
LDP_PWM_SL_IP_T_DLY_VCV_CTL_SL	3	0... 4000H	0... 100	0.00610352	%
Delay time during soft closing of VCV					
IP_T_DUR_VCV_CTL_O_FW	V	0... FFFFH	0... 262.14	0.004	ms
LDP_CUR_ST_IP_T_DUR_VCV_CTL_O_FW	4	0... FFFFH	0... 65.535	0.001	A
LDP_CUR_STOP_IP_T_DUR_VCV_CTL_O_FW	4	0... FFFFH	0... 65.535	0.001	A
Freewheeling time after VCV pick-up phase					
IP_T_DUR_VCV_CTL_1	V	0... FFFFH	0... 65.535	0.001	ms
LDP_N_32_T_DUR_VCV_CTL	5	0... FFH	0... 8160	32	rpm
LDP_CLOSE_RNG_T_DUR_VCV_CTL	3	0... 780H	0... 720	0.375	°CRK
Time for pull in duration of VCV control					
IP_T_DUR_VCV_CTL_BAS	V	0... FFFFH	0... 262.14	0.004	ms
LDPM_VB_1_FUSL	8	0... FFH	0... 25.8984375	0.1015625	V
LDPM_N_32_IP_T_DLY_VCV_OPEN_ADD	8	0... FFH	0... 8160	32	rpm
Basic time for pull-in phasec of VCV actuation					
IP_T_DUR_VCV_CTL_PEAK_BAS	V	0... FFFFH	0... 262.14	0.004	ms
LDP_VB_IP_DUR_VCV_CTL_PEAK_BAS	5	0... FFH	0... 25.8984375	0.1015625	V
Base pull-in time of VCV current control					
IP_T_DUR_VCV_CTL_PEAK_BAS_TYP_2	V	0... FFFFH	0... 262.14	0.004	ms
LDP_N_IP_T_DUR_VCV_CTL_PEAK_BAS_TYP_2	6	0... FFH	0... 8160	32	rpm
Base pull-in time of VCV current control					
IP_T_DUR_VCV_CTL_PEAK_CLOSE_SL	V	0... FFFFH	0... 65.535	0.001	ms
LDP_PWM_IP_T_DUR_VCV_CTL_PEAK_CLOSE_SL	6	0... 4000H	0... 100	0.00610352	%
Duration of pull-in time for VCV actuation during active soft landing					
IP_T_DUR_VCV_CTL_PEAK_SL	V	0... FFFFH	0... 262.14	0.004	ms
LDP_VB_IP_T_DUR_VCV_PEAK_SL	2	0... FFH	0... 25.8984375	0.1015625	V
Base pull-in time of VCV current control during soft closing					
IP_T_DUR_VCV_CTL_SL_AD_END	V	0... FFFFH	0... 65.535	0.001	ms
LDP_VB_IP_T_DUR_VCV_CTL_SL_AD_END	8	0... FFH	0... 25.8984375	0.1015625	V

Copyright ©Continental AG. Transmittal, reproduction, dissemination and/or editing of this document as well as utilisation of its contents and communication thereof to others without expressed authorisation are prohibited. Offenders will be held liable for payment of damages. All rights created by patent grant or registration of a utility model or design patent are reserved.

Name	Mode	Coded Limits	Display Limits	Resolution	Unit
LDPM_R_VCV_1_FUSL	6	0... FFFFH	0... 15.99975585938	244.141e-6	Ohm
Correction of adaptated value to applied value for pull-in time during VCV holding phase depending on battery voltage and temperature of fuel pressure actuator					
IP_T_VCV_OPEN_ADD	V	0... FFFFH	0... 262.14	0.004	ms
LDPM_VB_1_FUSL	8	0... FFH	0... 25.8984375	0.1015625	V
LDPM_N_32_IP_T_DLY_VCV_OPEN_ADD	8	0... FFH	0... 8160	32	rpm
Basic time pulse width of VCV actuation					
IP_VCV_CLOSE_RNG	V	0... 780H	0... 720	0.375	°CRK
LDP_PUMP_VOL_VCV_IP_VCV_CLOSE	16	0... FFFFH	0... 99.99847412109	0.00152588	%
Conversion table for the required pump volume to the closing angle of the control valve					
IP_VCV_OPEN_ADD	V	0... 780H	-360 ...360	0.375	°CRK
LDPM_VB_1_FUSL	8	0... FFH	0... 25.8984375	0.1015625	V
LDPM_N_32_IP_T_DLY_VCV_OPEN_ADD	8	0... FFH	0... 8160	32	rpm
Offset for the opening angle of the control valve due to delay time					
IP_VCV_OPEN_LIM_3	V	0... 780H	0... 720	0.375	°CRK
LDPM_VB_1_FUSL	8	0... FFH	0... 25.8984375	0.1015625	V
LDPM_N_32_IP_T_DLY_VCV_OPEN_ADD	8	0... FFH	0... 8160	32	rpm
Limitation angle for the Off-Limiter					
LC_CUR_VCV_MAN_ACT	V	0... 1H	0 ...1	1	-
Switch for manual CUR_VCV					
LC_ENA_VCV_LIH	V	0... 1H	0 ...1	1	-
Switch for enabling VCV limphome					
LC_MFP_REQ_L_ACT	V	0... 1H	0 ...1	1	-
Manual activation condition for small quantity operation					
LC_PUMP_VOL_VCV_MAN	V	0... 1H	0 ...1	1	-
Switch for manual PUMP_VOL_VCV					
LC_STATE_DEACC_PLS_ACT	V	0... 1H	0 ...1	1	-
Activation state for VCV deacceleration pulse					
LC_SWI_VCV_TYP	V	0... 1H	0 ...1	1	-
Applicative switch for selection of used VCV type					
LC_VCV_DI_MOD	V	0... 1H	0 ...1	1	-
Switch to select type of VCV disable mode (0 = ATIC94/113 configuration; 1 = enhanced ATIC140 configuration)					

▶ Import actions:

ACTION_INFR_MflDisable(**IN** <PRM_PUMP_NR>, **IN** <PRM_DISABLE_MODE>)

ACTION_INFR_MflEnable(**IN** <PRM_PUMP_NR>)

ACTION_INFR_MflSetVcvCtlPls(**IN** <PRM_PUMP_NR>, **IN** <PRM_ANG_REF_VCV>, **IN** <PRM_ANG_CUR_ON_VCV>, **IN** <PRM_ANG_CUR_OFF_VCV>, **IN** <PRM_PWM_VCV_OPL_CTL_MAX>, **IN** <PRM_T_DUR_VCV_CTL_PEAK>, **IN** <PRM_PWM_VCV_CTL_PEAK>, **IN** <PRM_FRQ_PWM_VCV_CTL_PEAK>, **IN** <PRM_T_DUR_VCV_CTL_HOLD_0>, **IN** <PRM_PWM_VCV_CTL_0>, **IN** <PRM_T_DUR_VCV_CTL_0_FW>, **IN** <PRM_FRQ_PWM_VCV_CTL_0>, **IN** <PRM_PWM_VCV_CTL_1>, **IN** <PRM_FRQ_PWM_VCV_CTL_1>, **IN** <PRM_T_DUR_VCV_CTL_FW>)

Continued on next page

Copyright ©Continental AG. Transmittal, reproduction, dissemination and/or editing of this document as well as utilisation of its contents and communication thereof to others without expressed authorisation are prohibited. Offenders will be held liable for payment of damages. All rights created by patent grant or registration of a utility model or design patent are reserved.

ACTION_INFR_MflSetVcvDeaccPls(**IN** <PRM_PUMP_NR>, **IN** <PRM_LV_STATE_DEACC_PLS_ACT>, **IN** <PRM_T_DEACC_OFF_VCV>, **IN** <PRM_T_DUR_VCV_CTL_DEACC>, **IN** <PRM_PWM_VCV_DEACC_PEAK>, **IN** <PRM_FRQ_PWM_VCV_DEACC_PEAK>, **IN** <PRM_T_DEACC_ON_VCV>, **IN** <PRM_PWM_VCV_CTL_DEACC>, **IN** <PRM_FRQ_PWM_VCV_CTL_DEACC>, **IN** <PRM_T_DUR_VCV_DEACC_FW>)
ACTION_INFR_MflStart(**IN** <PRM_PUMP_NR>, **IN** <PRM_T_VCV_CTL_ST>, **IN** <PRM_PWM_VCV_CTL_PEAK_ST>, **IN** <PRM_FRQ_PWM_VCV_CTL_PEAK_ST>, **IN** <PRM_PWM_VCV_CTL_ST>, **IN** <PRM_FRQ_PWM_VCV_CTL_ST>, **IN** <PRM_NC_T_DUR_MAX>, **IN** <PRM_T_DUR_VCV_CTL_FW>)
ACTION_INFR_MflUpdate(**IN** <PRM_PUMP_NR>)
ACTION_INFR_SetCurCtlModeVcv(**IN** <PRM_PUMP_NR>, **IN** <PRM_LF_CUR_CTL_MOD_VCV>)

▶ General Information

Working of the high pressure system :
The module fuel pump control is basically the interface from the output of fuel pressure control to the actual type of the fuel pump. Figure 1 below shows the fuel system from the tank (canister) to the injectors. The low pressure pump is delivering fuel to the high pressure single piston pump at a controlled pressure. For steady conditions with no pressure changes the amount of fuel delivered to the rail is the same as the injected amount of fuel into the combustion chamber.

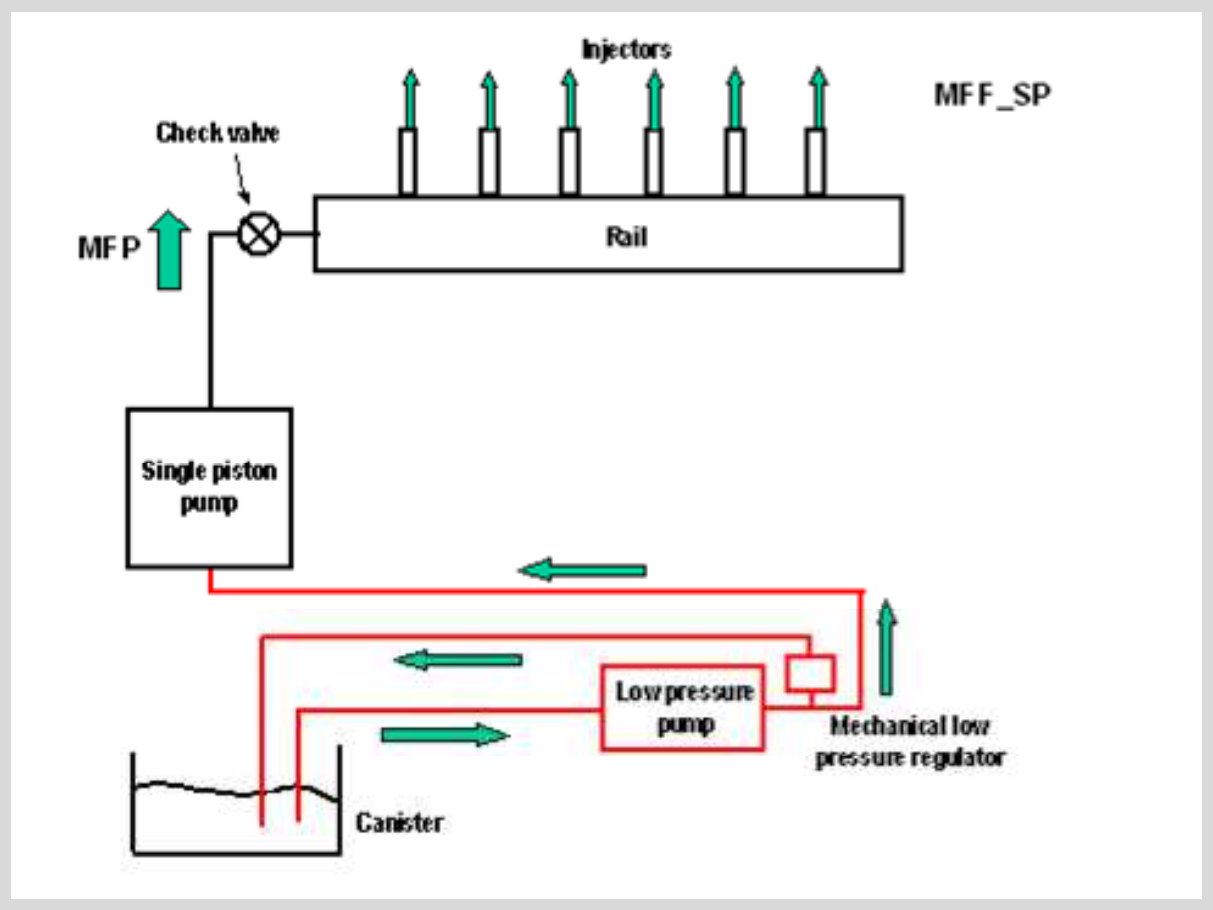

Figure 43.15.1: Fuel system layout

Copyright ©Continental AG. Transmittal, reproduction, dissemination and/or editing of this document as well as utilisation of its contents and communication thereof to others without expressed authorisation are prohibited. Offenders will be held liable for payment of damages. All rights created by patent grant or registration of a utility model or design patent are reserved.

Reference angle definition for working of the Volume control valve (VCV) :

The reference point for the pump is the TDC of the plunger of the pump for the calculation of fuel mass delivery. Since the pump is mounted on the camshaft, this point is camshaft related, but the whole calculation for the VCV control is crankshaft angle based. Therefore the transfer between these two systems has to be done via a so called reference angle. Hence this angle includes the difference of the TDC of the plunger of the pump to the corresponding TDC of the engine cylinders on the crankshaft (for example, the reference angles of a 4 cylinder engine with engine cylinder TDC's and pump TDC's on same angles are 180° CRK, 360° CRK, 540° CRK and 720° CRK). The reference angle calculation also includes IVVT influences and mounting influences. The figure 2 below shows the relation of the reference angle with respect to the pump TDC.

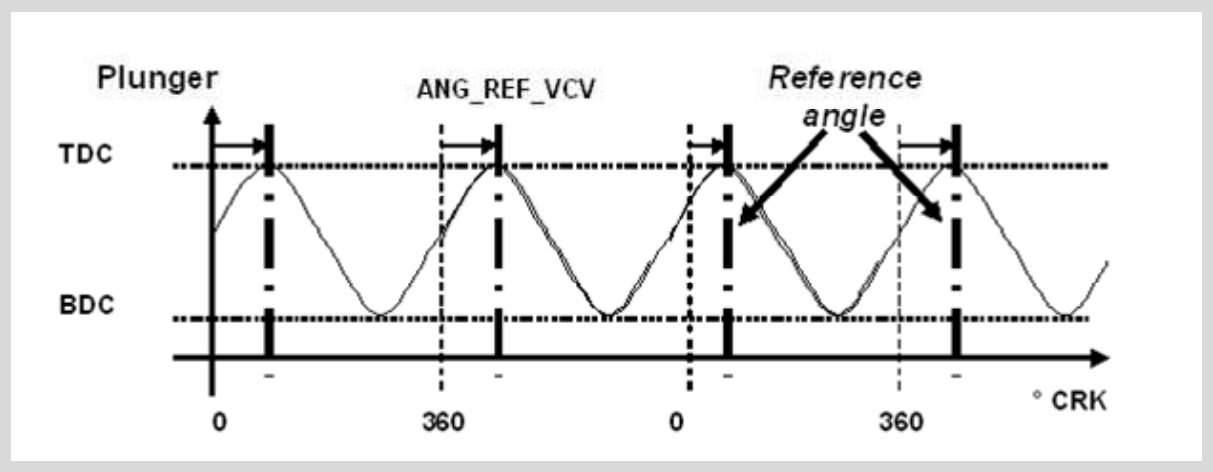

Figure 43.15.2: Reference angle position w.r.t. piston position of the pump

Basic working principle of the VCV :

The functional principle of the single piston pump is described below. The lobe, which is driving the plunger of the pump is directly connected to the camshaft. The plunger movement depends on the architecture of the pump and the lobe profile. Depending on this movement the amount of fuel delivered can be calculated. There is a suction stroke and a pressure (delivery) stroke.
The figure 3 below shows the signals for operating the single cylinder pump. It can be seen that the control valve has to be closed within the suction stroke to ensure a fully closed valve at the beginning of the pressure stroke from BDC if 100% delivery is to be given to the rail. Depending on the amount (0% to 100%) of delivery required, the closing angle of the VCV is calculated. The closing and opening commands are depending on the different pump types.

There are two types of VCV's,

1. Currentless open VCV (Figure 3)
In case of no applied current to the solenoid of the VCV, the valve is open. During suction stroke, the fuel enters the pump chamber and the amount of fuel that will be delivered into the rail is decided based on the crank angle at which the valve is closed, i.e. current is stopped.
We can see from the below figure that, ANG_CUR_ON is the angle at which current feed of the valve is started and the closing of the valve is started and the ANG_CUR_OFF is the angle at which current feed of the valve is

Copyright ©Continental AG. Transmittal, reproduction, dissemination and/or editing of this document as well as utilisation of its contents and communication thereof to others without expressed authorisation are prohibited. Offenders will be held liable for payment of damages. All rights created by patent grant or registration of a utility model or design patent are reserved.

deactivated. We see that the valve remains closed even after current is stopped, this is due to the pressure of the compressed fuel in the pump chamber which acts against the spring force in the VCV and keeps the valve closed just before delivery.

2. Currentless close VCV (Figure 4)
In case of no applied current to the solenoid of the VCV, the valve is closed. During suction stroke, the current is given to the valve to open and the fuel enters the pump chamber and the amount of fuel that will be delivered into the rail is decided based on the crank angle at which the valve is closed, i.e. current is stopped.
We can see from the below figure that, ANG_CUR_ON is the angle at which current feed of the valve is started and the ANG_CUR_OFF is the angle at which the current feed of the valve is deactivated and the closing of the valve is started. We see that the valve closes quicker than currentless open VCV after current is stopped, this is due to the pressure of the compressed fuel in the pump chamber acting with the spring force in the VCV to close the valve.

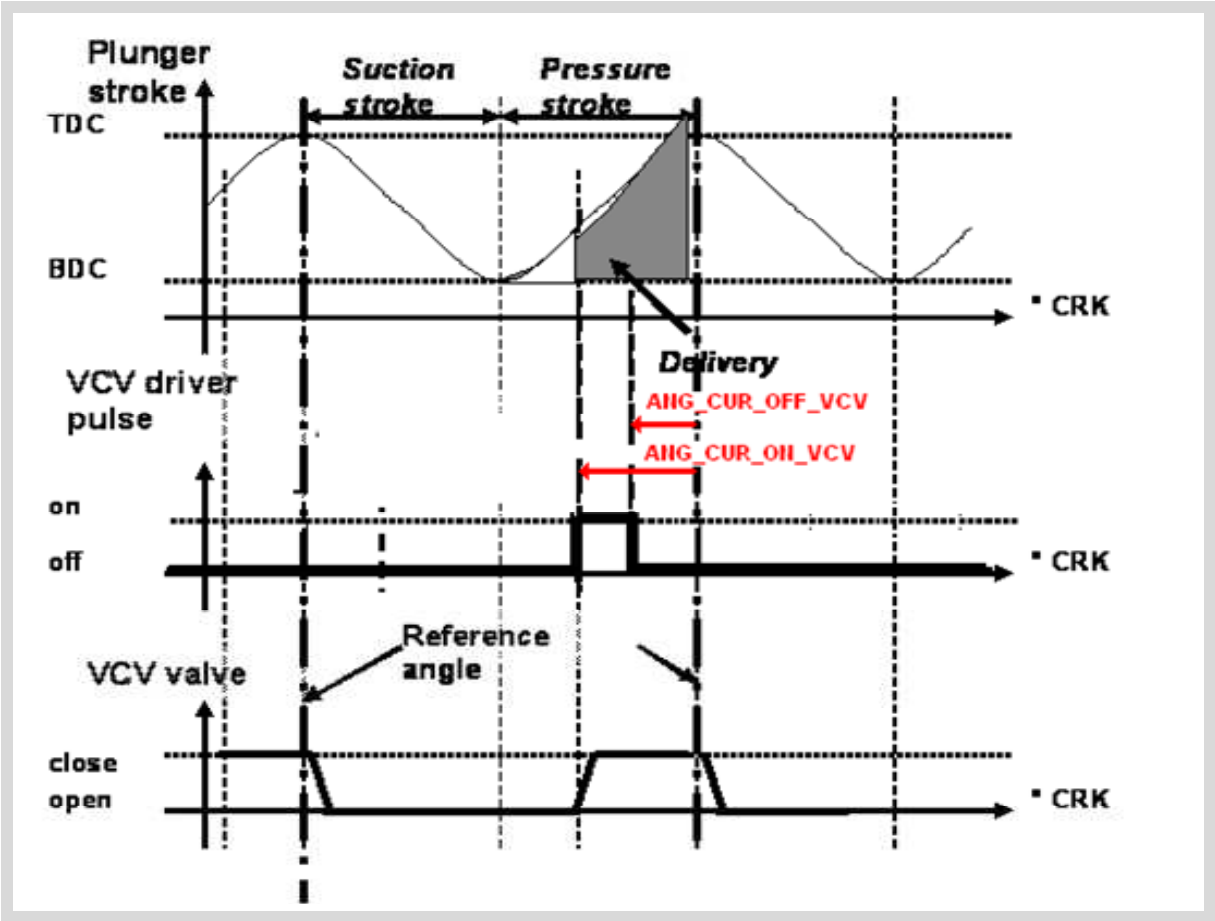

Figure 43.15.3: Operation of currentless open VCV

Copyright ©Continental AG. Transmittal, reproduction, dissemination and/or editing of this document as well as utilisation of its contents and communication thereof to others without expressed authorisation are prohibited. Offenders will be held liable for payment of damages. All rights created by patent grant or registration of a utility model or design patent are reserved.

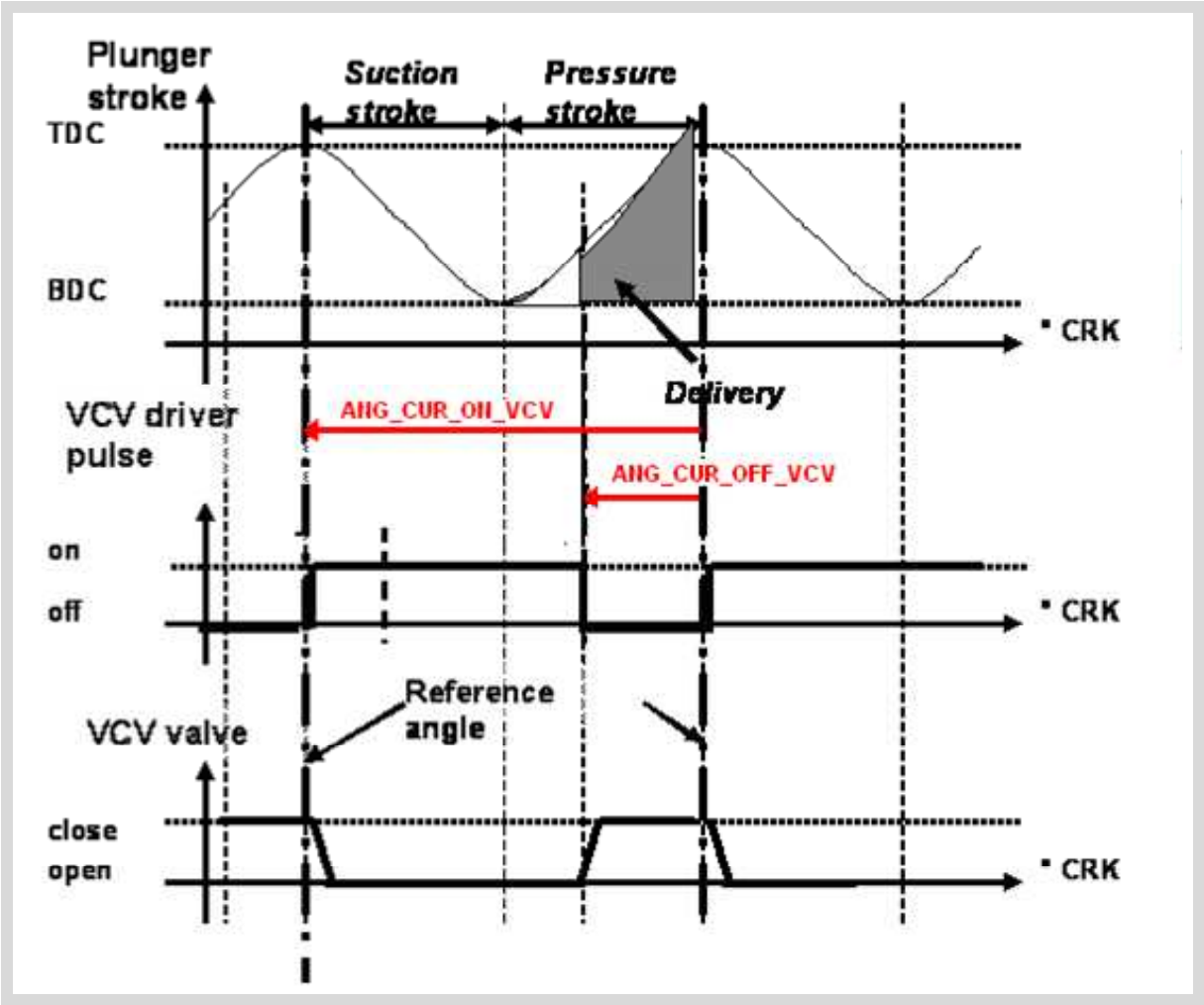

Figure 43.15.4: Operation of currentless closed VCV

The VCV control calculations are done in time based mode until the engine is synchronised and the calculations are done in segment based mode after the engine is synchronised.

Current profile of VCV :

The VCV is operated by high side and low side switches. Regardless of currentless open or currentless close VCV, the current profile is the same. For detalied representation of the current profile of the VCV please refer to the "Requirements to infrastructure" module of FUSL aggregate. For better understanding of this module, the basic currrent profile is explained below.

The current profile during VCV actuation consists of four phases,

1. Pull-in phase – During this phase, the maximum height of the current is reached (100% PWM is applied). The VCV is completely open by end of this stage if its a currentless closed VCV and completely closed by end of this stage if its a currentless open VCV.
2. Hold phase – During this phase, a variable current is obtained (between 0% and 100% PWM applied) by closing and opening the high side switch of the VCV in different patterns based on the PWM signal input. The low side switch is closed during this phase. All phases after this are mainly done to remove the inductivity effect in the VCV due to the application of high voltage.

Copyright ©Continental AG. Transmittal, reproduction, dissemination and/or editing of this document as well as utilisation of its contents and communication thereof to others without expressed authorisation are prohibited. Offenders will be held liable for payment of damages. All rights created by patent grant or registration of a utility model or design patent are reserved.

3. Free wheeling phase – During this phase, current is reduced through a free wheeling diode by keeping the high side switch open and low side switch closed.
4. Clamping phase – During this phase, the remaining residual curent is reduced to zero through clamping diodes by keeping both the high side switch and low side switch open.

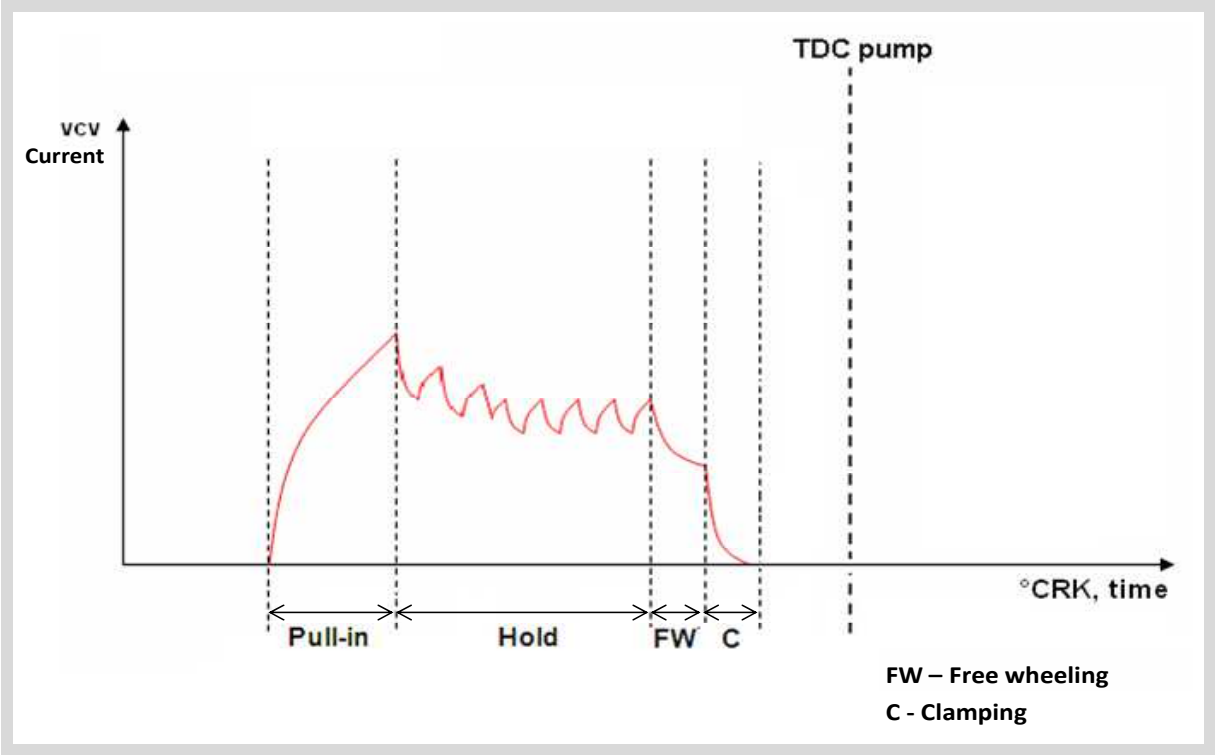

Figure 43.15.5: Current profile during VCV operation

VCV control states :
The pump has specific operating states, which are mentioned in the state diagram for STATE_VCV below. These states depend on the requested fuel mass for the fuel rail, which has to be delivered by the pump. As we can see from the figure 6 below, that before engine synchronisation, only the MFP_START phase can be requested and only after synchronisation, other state transitions can be performed.

VCV_OPEN
In the state 'VCV_OPEN' no fuel should be delivered to the fuel rail. The variable LV_INH_VCV is set to 1. The VCV closing angle is set to zero to ensure zero delivery. In this state, the VCV is open and the BSW does not execute any closing command to the solenoid of VCV. When the engine is not running, the VCV_OPEN state is set.

MFP_START
This state is requested whenever the engine is cranked and this state is retained until the engine is synchronized and the fuel pressure reaches the desired setpoint. This state is initiated to achieve faster fuel pressure increase in the fuel rail to enable combustion. In order to have quick pressure increase, a continuous current is supplied to the VCV to have a constant fuel delivery from the pump. To see the current profile of the VCV at start phase, please refer to the "Requirements to infrastructure" module of FUSL aggregate.

MFP_MAX

Copyright ©Continental AG. Transmittal, reproduction, dissemination and/or editing of this document as well as utilisation of its contents and communication thereof to others without expressed authorisation are prohibited. Offenders will be held liable for payment of damages. All rights created by patent grant or registration of a utility model or design patent are reserved.

The pump can only deliver a certain amount of fuel per stroke. The maximum deliverable fuel mass into the rail is MFP_MAX. In the state MFP_MAX, the full pumping performance of the pump is requested. Therefore the maximum pump performance is 100% and the maximum VCV closing angle is applied.

MFP_CTL
The state 'MFP_CTL' is the only state where controlled (requested) fuel mass can be delivered by the pump. In this state, the required pump performance is calculated using MFP_MAX and MFP_REQ. With the help of the pump performance, the VCV closing angle is determined.

VCV_TEST
The state 'VCV_TEST' is basically for testing purposes. In the test mode VCV_TEST, the pump performanceis adjusted manually by a calibration. If the value of this variable is 0, then the bit LV_INH_VCV is set to 1, when this happens the BSW does not execute any closing command to the solenoid of VCV.

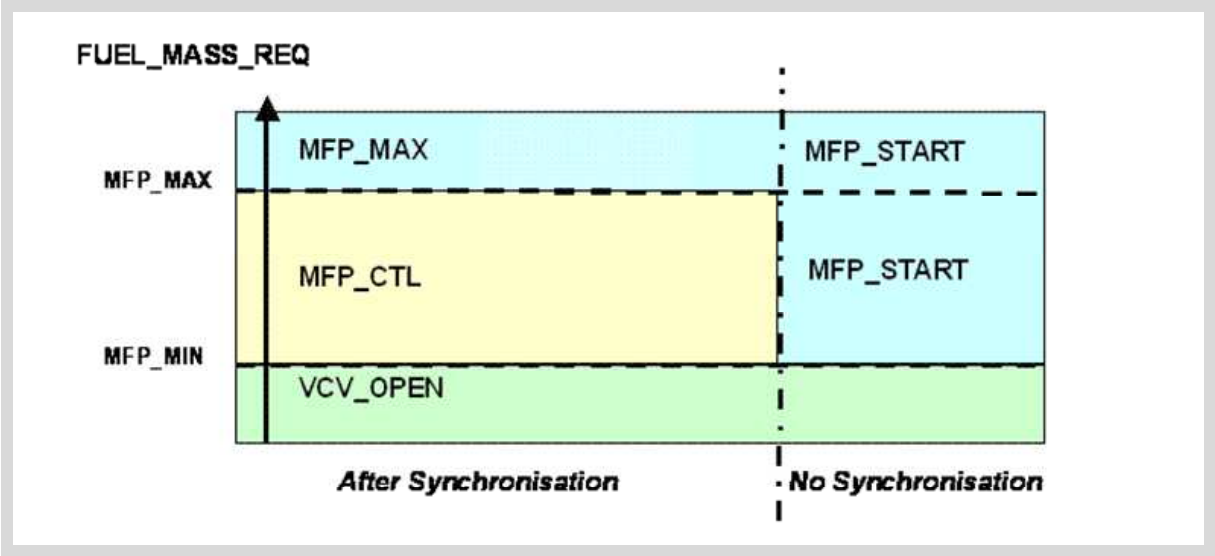

Figure 43.15.6: States of VCV

▶ **Application Conditions**

Initialisation:	`RST, ERU2ES, NVMINI, NVMRES, NVMSTO`

Activation:	`10MS: always`
	`SEG: always`
	`1S: LV_ES == 0`

Deactivation:	`if activation not true`
Recurrence:	`10MS, SEG, 1S`

▶ **Function Description**

Copyright ©Continental AG. Transmittal, reproduction, dissemination and/or editing of this document as well as utilisation of its contents and communication thereof to others without expressed authorisation are prohibited. Offenders will be held liable for payment of damages. All rights created by patent grant or registration of a utility model or design patent are reserved.

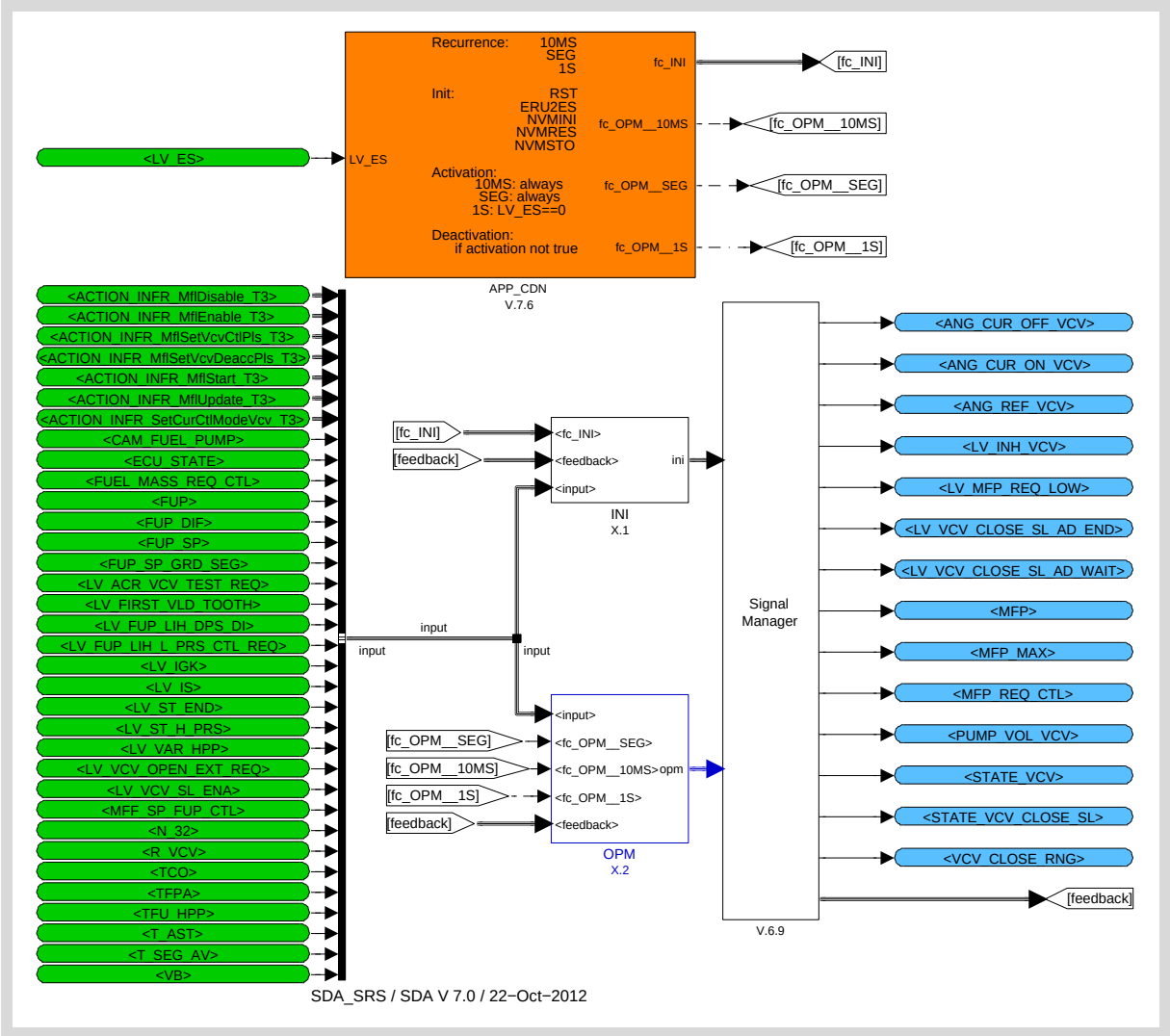

Figure 43.15.7:

43.15.1 Initialization

This section describes the initialization of all the output variables. The initialization is triggered at ECU reset, Engine run to Engine stop and at NVMY reset.

Copyright©Continental AG. Transmittal, reproduction, dissemination and/or editing of this document as well as utilisation of its contents and communication thereof to others without expressed authorisation are prohibited. Offenders will be held liable for payment of damages. All rights created by patent grant or registration of a utility model or design patent are reserved.

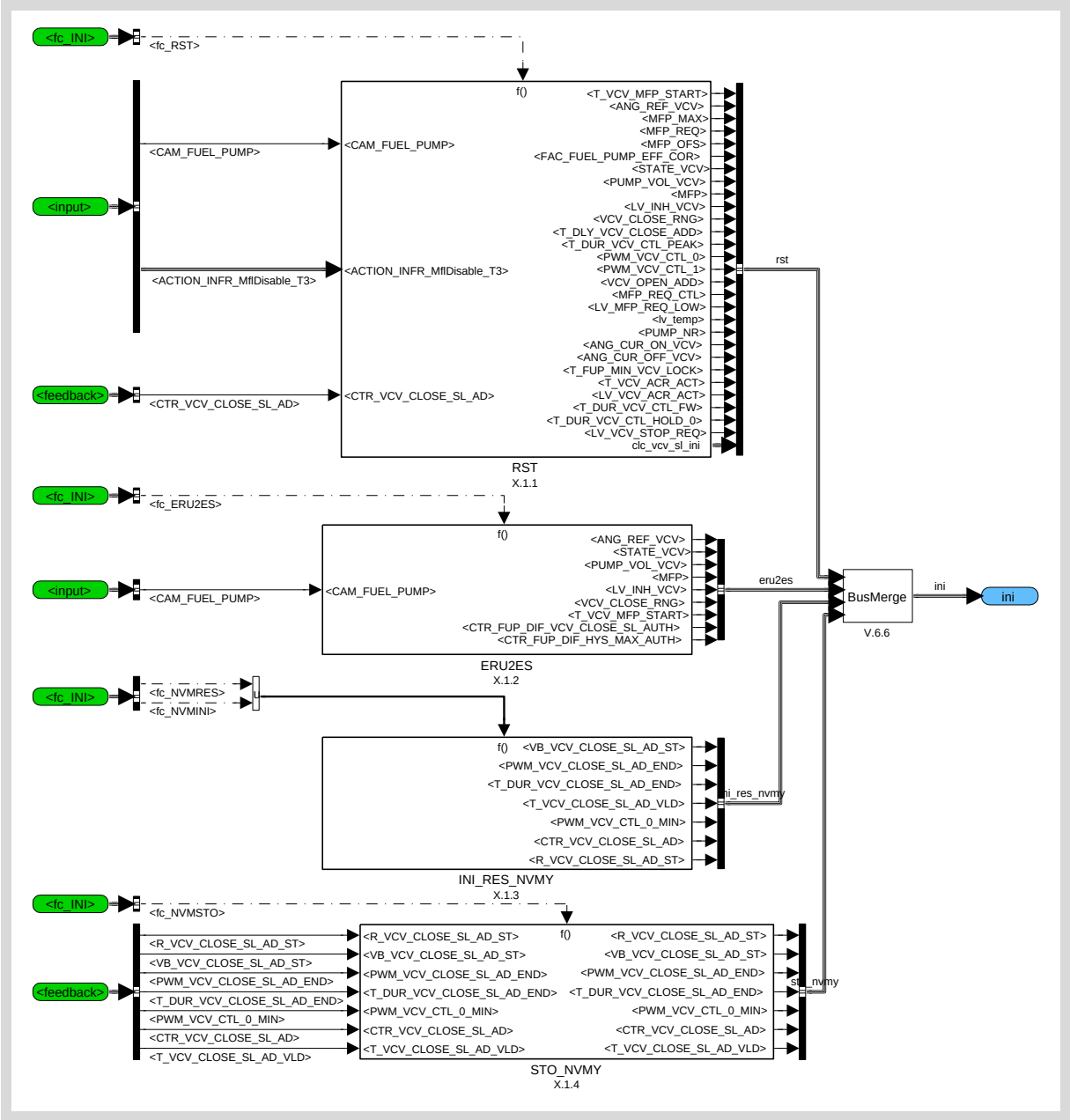

Figure 43.15.8:

43.15.1.1 Initialization at Reset

Initialization at ECU reset of all calculated variables is done in this section.

At every engine stop and or at ECU reset, the time to remain in VCV start phase is limited by calibration (C_T_VCV_MFP_START). Until the engine has exited the start phase, the VCV control will not switch to control phase, but in order to ensure that the current (continuous) feed is not too long which will result in heating of the VCV, this calibration can be used.

In case of multi-pump configuration, the number of pumps mounted on the engine can be set through a calibration (C_PUMP_NR).

Each pump can be disabled thorugh a calibration (C_DI_MOD). When the disable mode is active, then the communication from the ASW to IO (BSW) is stopped. When the DIV is operational through ATIC 113 (High

Copyright ©Continental AG. Transmittal, reproduction, dissemination and/or editing of this document as well as utilisation of its contents and communication thereof to others without expressed authorisation are prohibited. Offenders will be held liable for payment of damages. All rights created by patent grant or registration of a utility model or design patent are reserved.

side) and ATIC 94 (Low side), then C_DI_MOD should be set to zero and when the DIV is controlled by ATIC 140 (High side and Low side), then C_DI_MOD should be set to one. If ATIC 113 and ATIC 94 are used in the project and if C_DI_MOD is set to one, then the OC (Open circuit) diagnosis for the power stage cannot be done.

The mounting of the pump (TDC) with respect to the engine (TDC) is taken into consideration for the calculations for DIV control via the calibration, C_VCV_CLOSE_BAS. This initialization happens at every engine stop and at ECU reset

The duration of current feed for the free wheeling phase is also controlled through a calibration (C_T_DUR_VCV_CTL_FW). This is done in order to protect the clamping diode in the DIV against overheating.

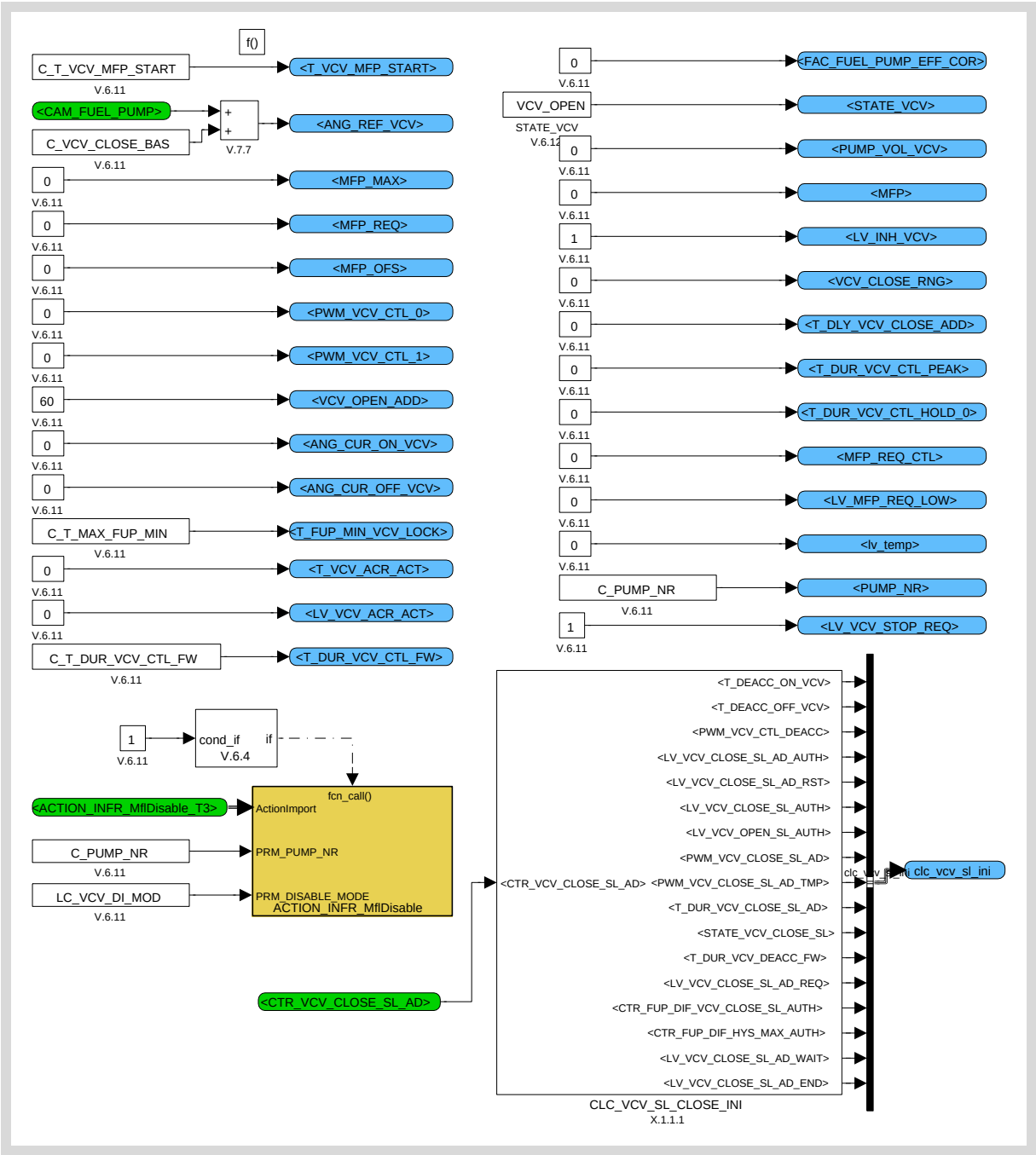

Figure 43.15.9:

Copyright ©Continental AG. Transmittal, reproduction, dissemination and/or editing of this document as well as utilisation of its contents and communication thereof to others without expressed authorisation are prohibited. Offenders will be held liable for payment of damages. All rights created by patent grant or registration of a utility model or design patent are reserved.

43.15.1.1.1 Initialization of variables for VCV soft landing

This section consists of initialization of soft landing (SL) related variables.
At initialization, the VCV SL counter status is checked against the calibrated thresholds for PWM adaptation (C_CTR_MAX_VCV_CLOSE_SL_AD_PWM) and T_DUR adaptation (C_CTR_MAX_VCV_CLOSE_SL_AD_T_DUR) to signal the status of adaptation completion flag.

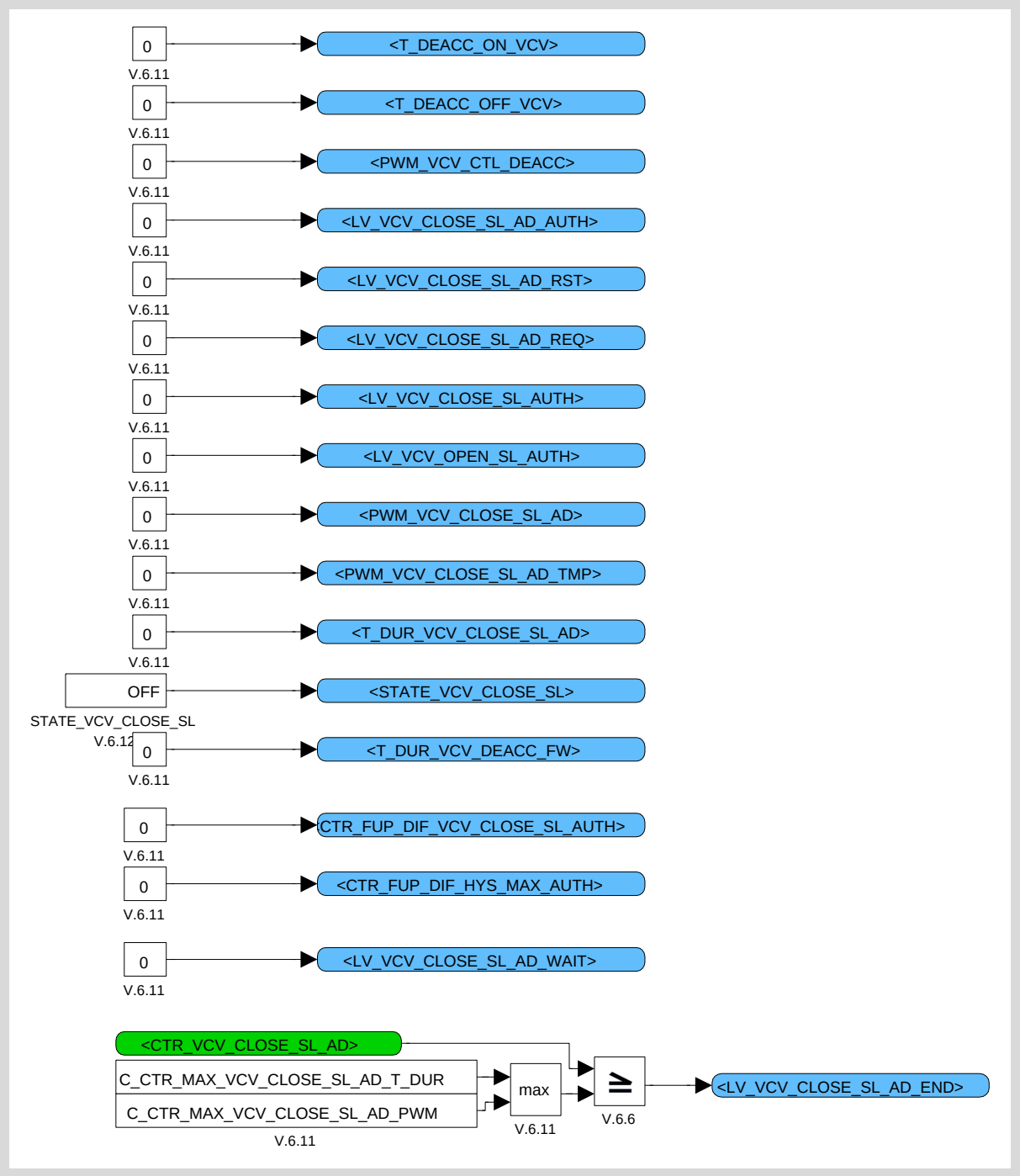

Figure 43.15.10:

Copyright ©Continental AG. Transmittal, reproduction, dissemination and/or editing of this document as well as utilisation of its contents and communication thereof to others without expressed authorisation are prohibited. Offenders will be held liable for payment of damages. All rights created by patent grant or registration of a utility model or design patent are reserved.

43.15.1.2 Initialization at Engine Run to Engine Stop

This section consists of initialization at engine run to engine stop event.

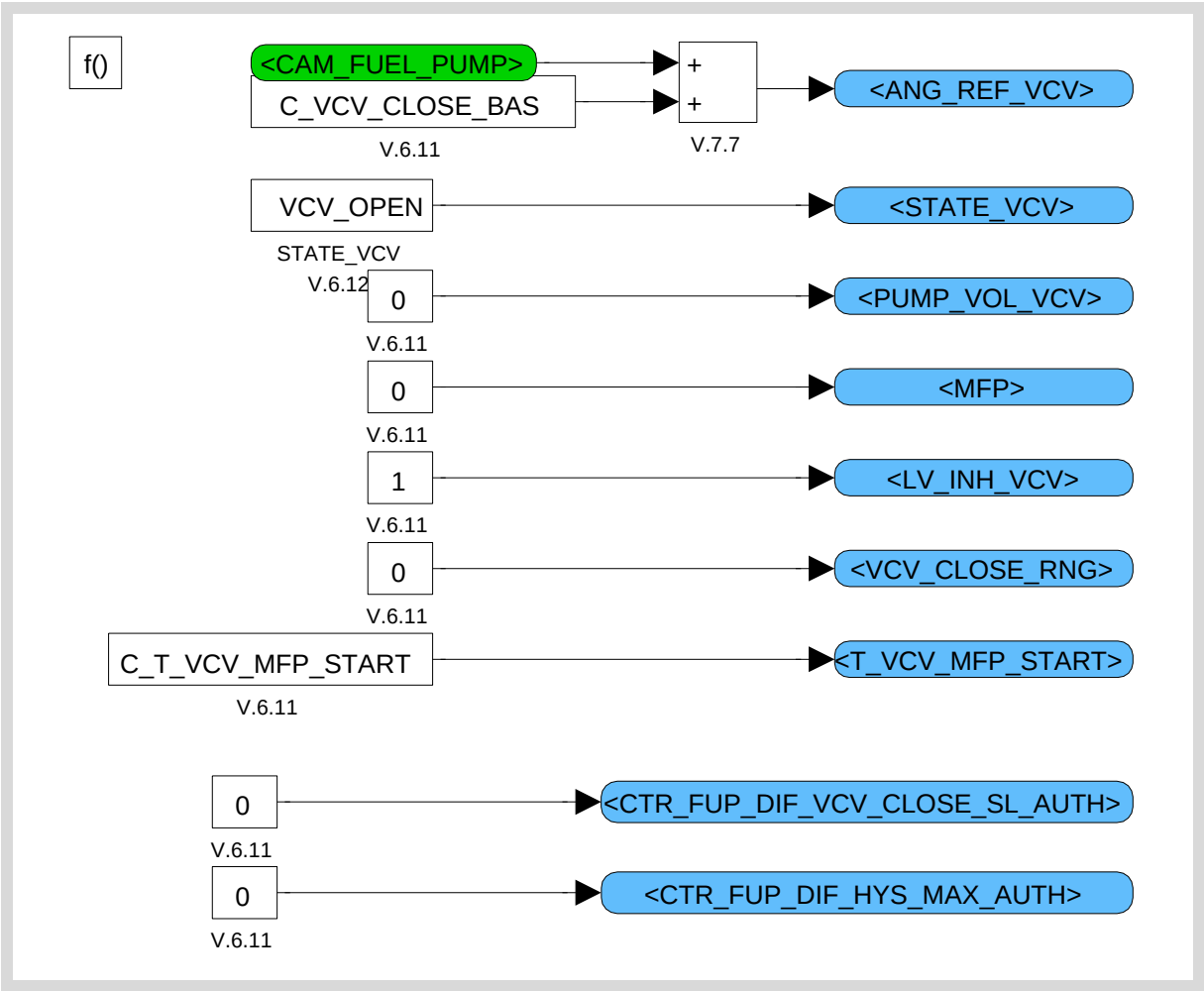

Figure 43.15.11:

Copyright ©Continental AG. Transmittal, reproduction, dissemination and/or editing of this document as well as utilisation of its contents and communication thereof to others without expressed authorisation are prohibited. Offenders will be held liable for payment of damages. All rights created by patent grant or registration of a utility model or design patent are reserved.

43.15.1.3 Initialization and reset of NVMY variables

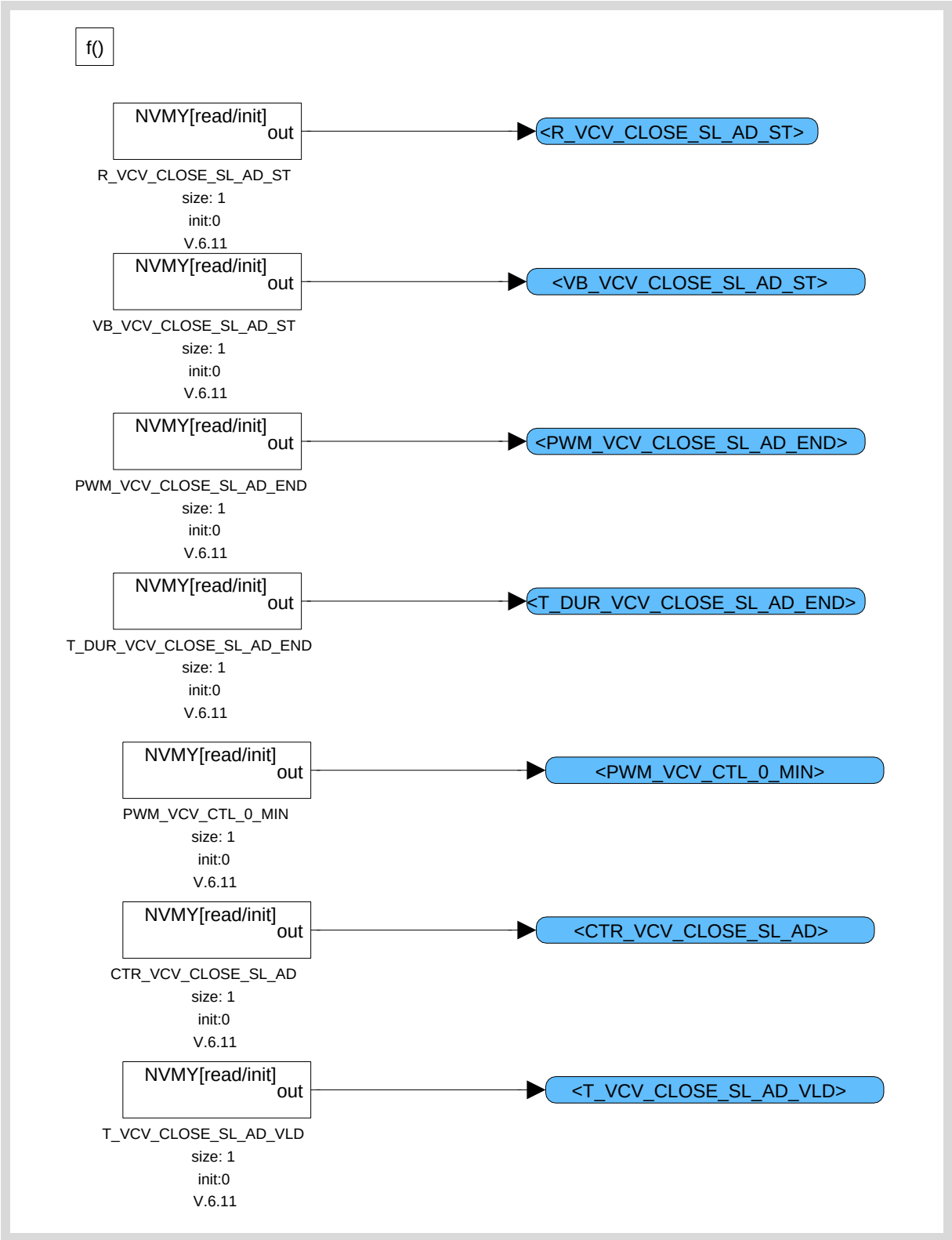

Figure 43.15.12:

Copyright ©Continental AG. Transmittal, reproduction, dissemination and/or editing of this document as well as utilisation of its contents and communication thereof to others without expressed authorisation are prohibited. Offenders will be held liable for payment of damages. All rights created by patent grant or registration of a utility model or design patent are reserved.

43.15.1.4 Storage of NVMY variables

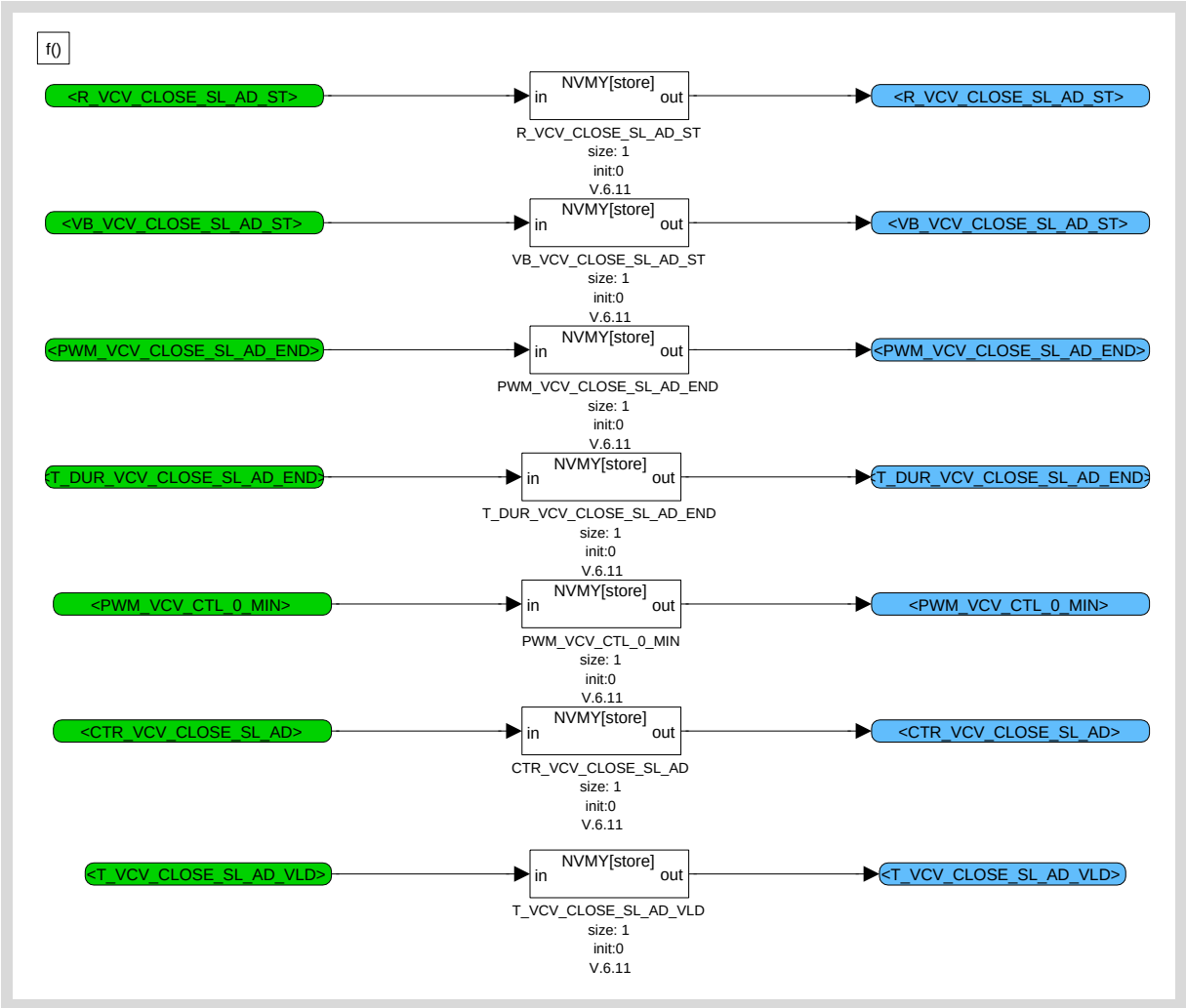

Figure 43.15.13:

43.15.2 Calculation Sequence

As long as the Engine is not synchronized, there is no segment based calculation for the VCV control, instead the calculation is time based (10 ms).

We see in the below figure that, as long as Engine is locked (for example via Immobilizer) or Engine is in power latch phase or Engine is running without synchronization or Engine is stopped or if the Engine has not yet exited the start phase , the subsystems are triggered every 10ms.

Copyright ©Continental AG. Transmittal, reproduction, dissemination and/or editing of this document as well as utilisation of its contents and communication thereof to others without expressed authorisation are prohibited. Offenders will be held liable for payment of damages. All rights created by patent grant or registration of a utility model or design patent are reserved.

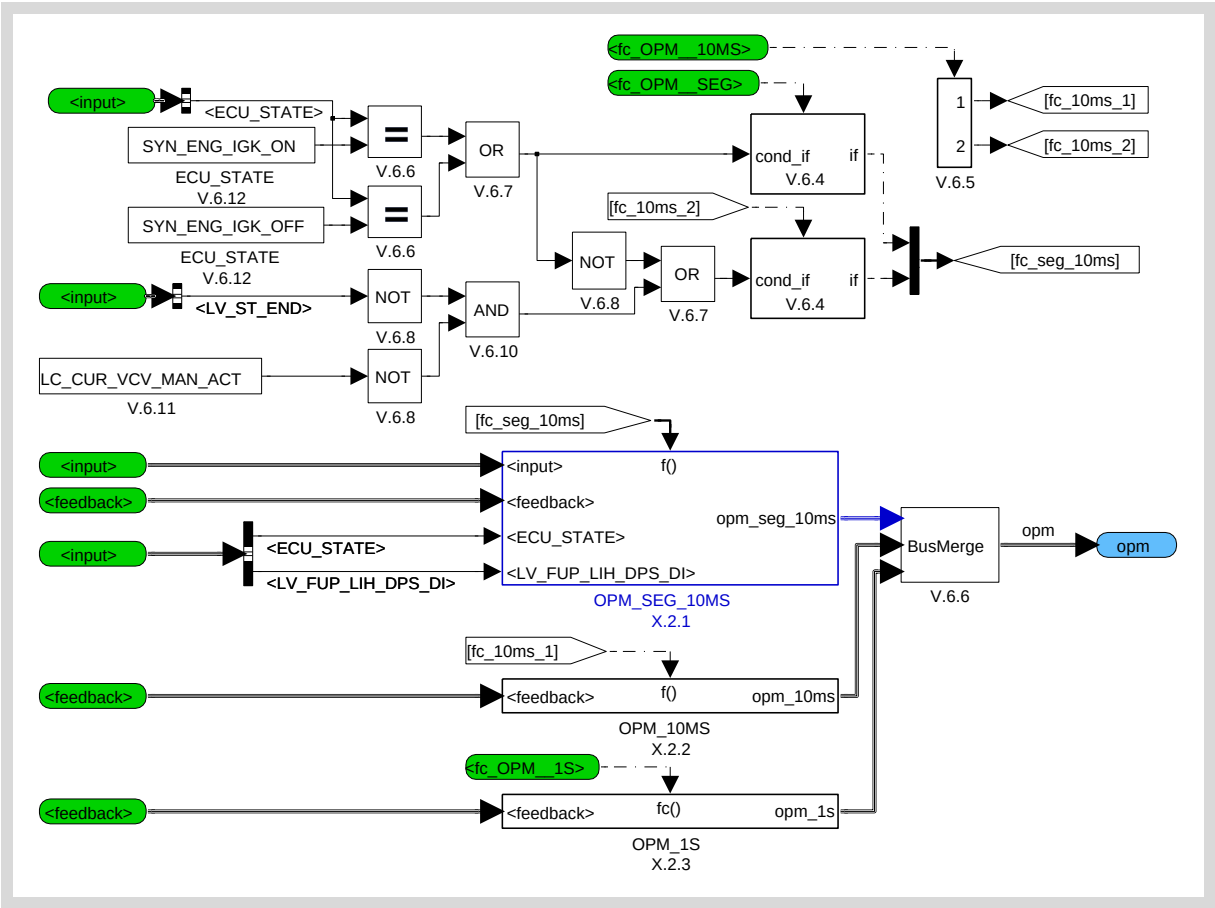

Figure 43.15.14:

43.15.2.1 Recurrence Sequencing

Using the calibration LC_ENA_VCV_LIH, the VCV operation can be inhibited. The VCV stays open untill the inhibition is active and no actuation is possible until the inhibition is cleared. This calibration is usually used for testing purposes only. Also, if limp home mode is active, then the VCV control is inactive.

Copyright ©Continental AG. Transmittal, reproduction, dissemination and/or editing of this document as well as utilisation of its contents and communication thereof to others without expressed authorisation are prohibited. Offenders will be held liable for payment of damages. All rights created by patent grant or registration of a utility model or design patent are reserved.

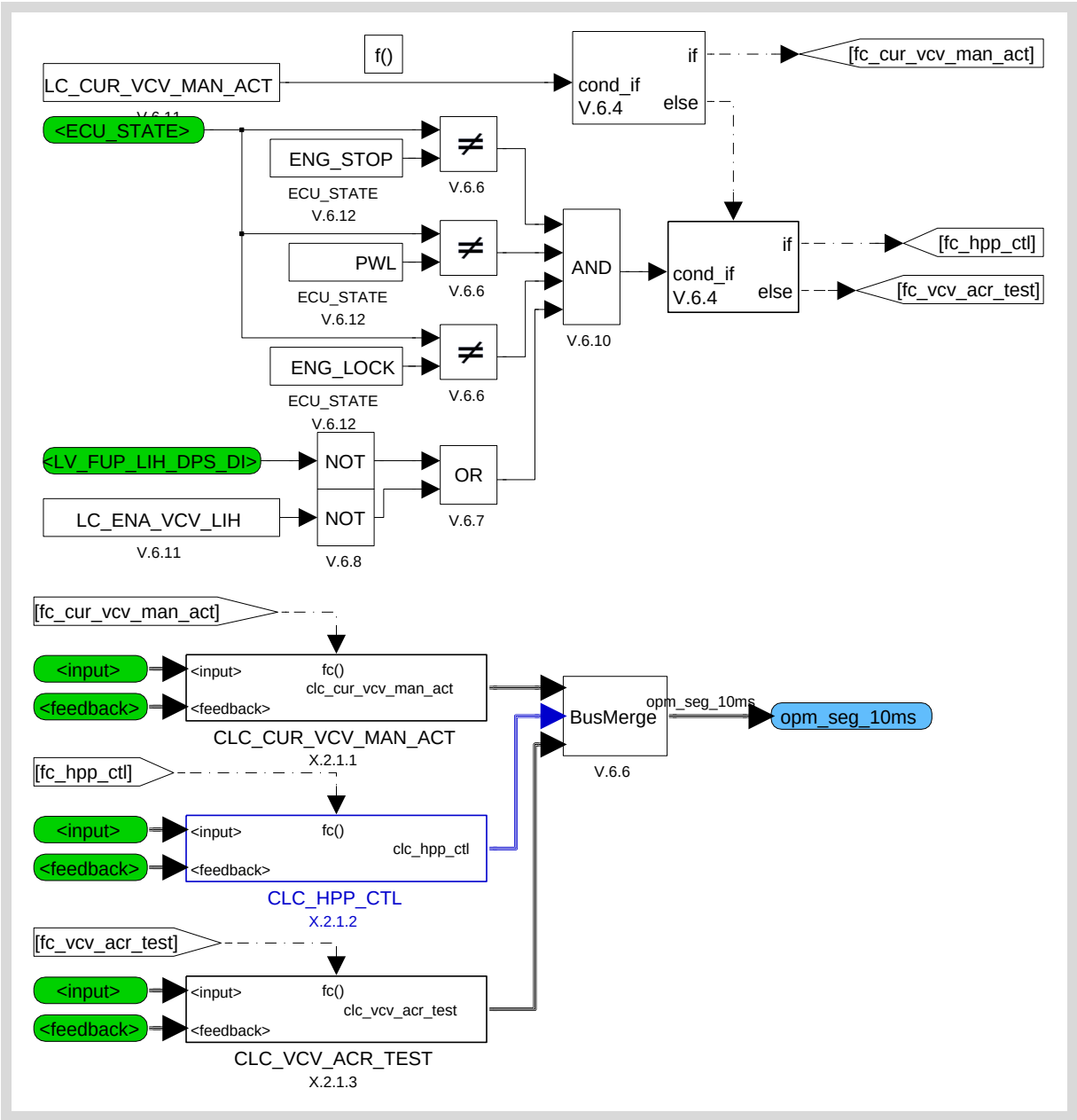

Figure 43.15.15:

Copyright ©Continental AG. Transmittal, reproduction, dissemination and/or editing of this document as well as utilisation of its contents and communication thereof to others without expressed authorisation are prohibited. Offenders will be held liable for payment of damages. All rights created by patent grant or registration of a utility model or design patent are reserved.

43.15.2.1.1 Manual setting of VCV current control parameters via application tool (overview)

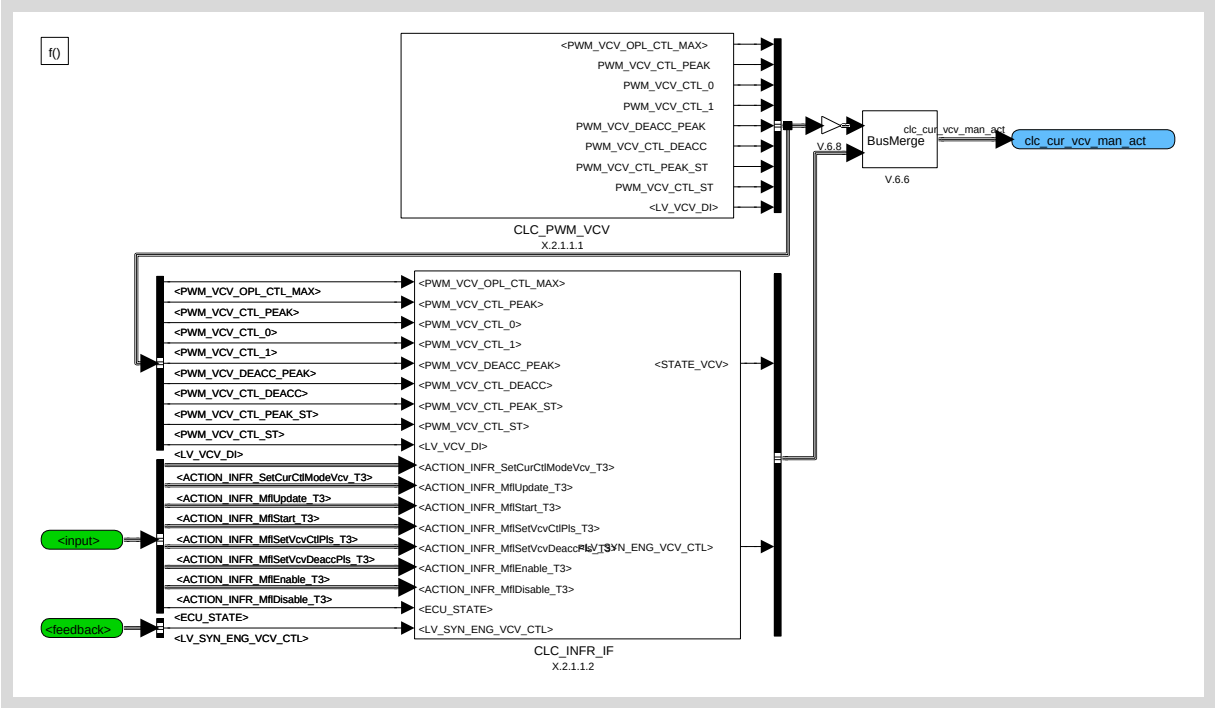

Figure 43.15.16:

43.15.2.1.1.1 Manual setting of VCV current control parameters via application tool (overview)

Depending on CLF_CUR_CTL_MOD_VCV and CLF_CUR_CTL_MOD_VCV_TEST the related current control parameters are calculated in a different way for each control phase.

CLF_CUR_CTL_MOD_VCV defines which phase of the VCV control pulse is executed in closed or open loop current control mode.

Current control phases:
bit 0: PEAK
bit 1: CTL_0 (= pick-up = hold_0)
bit 2: CTL_1 (= hold_1)
bit 3: DEACC_PEAK
bit 4: DEACC (_hold)
bit 5: ST (= start)

Current control modes:

- bit x is set: closed loop current control mode is executed for related phase
- bit x is reset: open loop current control mode is executed for related phase

CLF_CUR_CTL_MOD_VCV_TEST defines which test mode for each VCV control pulse phase is executed in case of closed loop current control mode is enabled:

- bit x is set: IP_PWM_CUR_VCV_REQ in combination with C_CUR_VCV_... is considered to adjust the related closed loop current control phase
- bit x is reset: C_PWM_VCV_... is considered to adjust the related closed loop current control phase

Copyright ©Continental AG. Transmittal, reproduction, dissemination and/or editing of this document as well as utilisation of its contents and communication thereof to others without expressed authorisation are prohibited. Offenders will be held liable for payment of damages. All rights created by patent grant or registration of a utility model or design patent are reserved.

The VCV actuation is disabled, in case that all control parameters are set to zero depending on the phase specific current control and test modes.

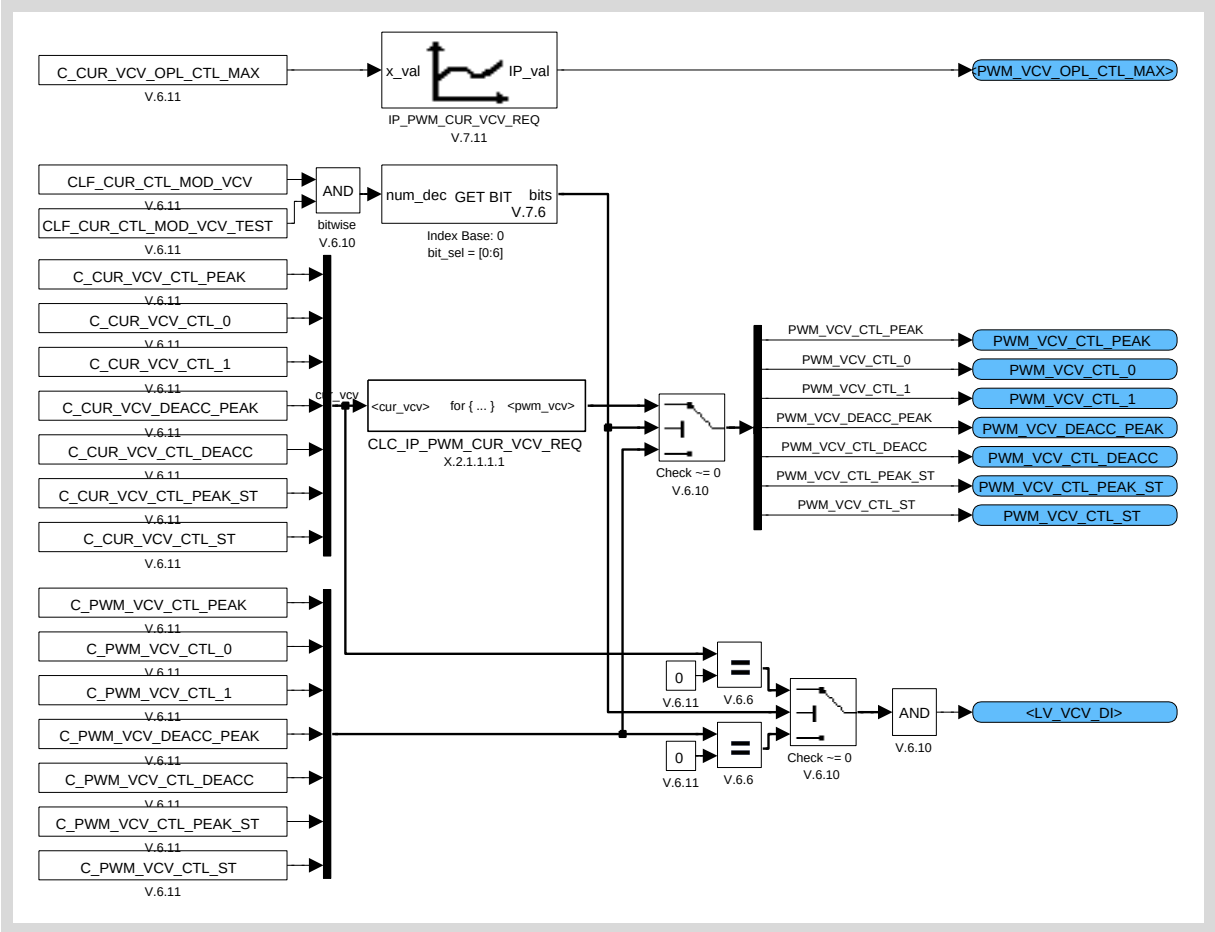

Figure 43.15.17:

43.15.2.1.1.1.1 Calculation of phase specific current set points of VCV control pulse

For each VCV control pulse phase a current set point is transferred into its respective duty-cycle.

Copyright ©Continental AG. Transmittal, reproduction, dissemination and/or editing of this document as well as utilisation of its contents and communication thereof to others without expressed authorisation are prohibited. Offenders will be held liable for payment of damages. All rights created by patent grant or registration of a utility model or design patent are reserved.

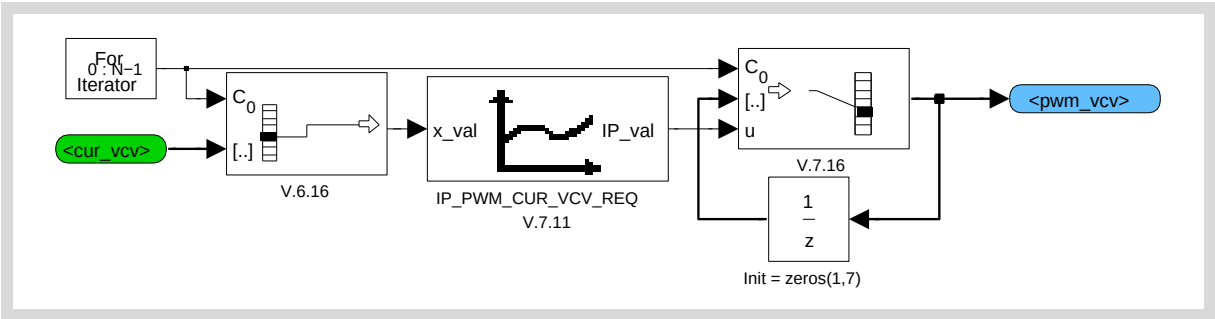

Figure 43.15.18:

Copyright ©Continental AG. Transmittal, reproduction, dissemination and/or editing of this document as well as utilisation of its contents and communication thereof to others without expressed authorisation are prohibited. Offenders will be held liable for payment of damages. All rights created by patent grant or registration of a utility model or design patent are reserved.

43.15.2.1.1.2 Manual setting of VCV current control parameters via application tool (details)

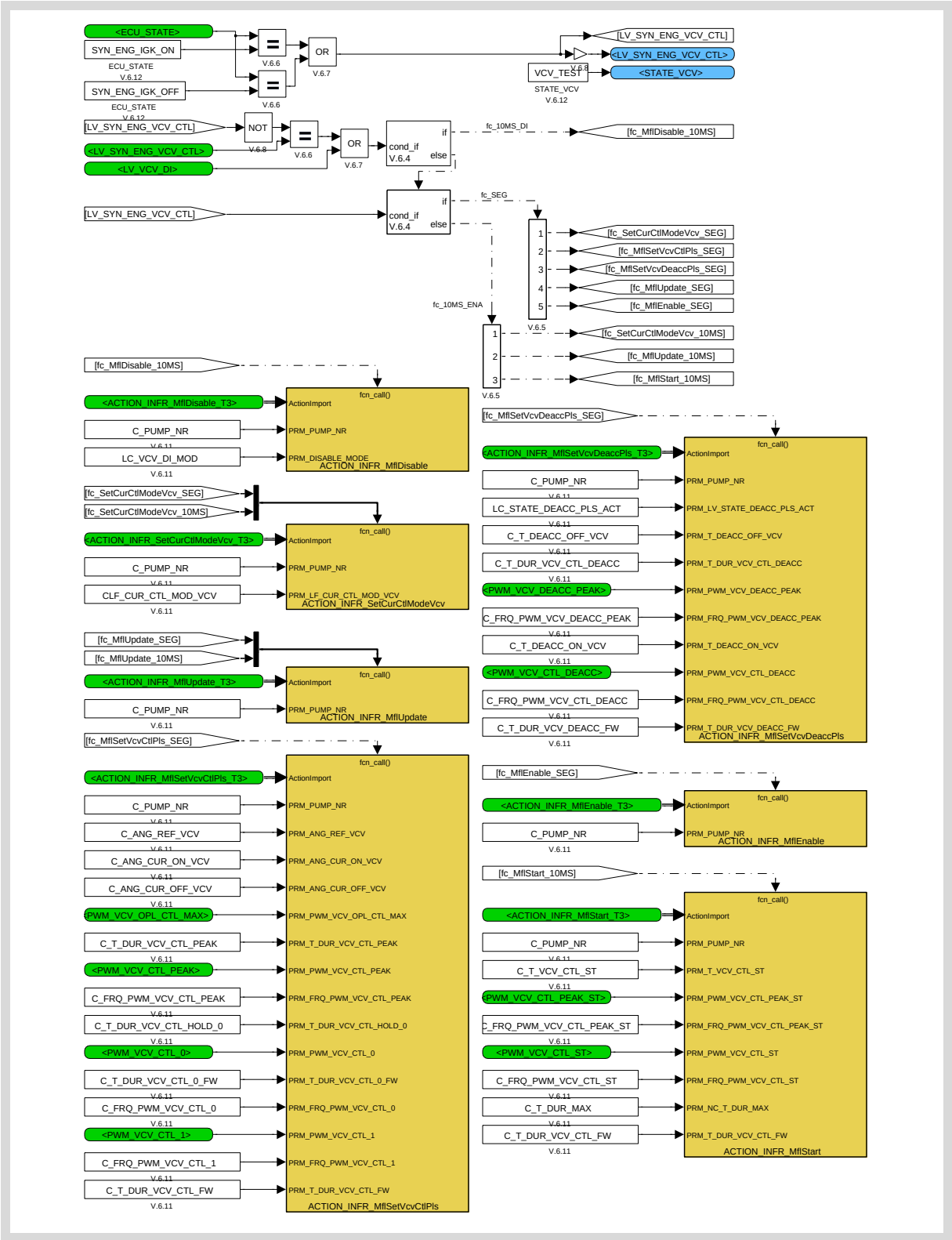

Figure 43.15.19:

Copyright ©Continental AG. Transmittal, reproduction, dissemination and/or editing of this document as well as utilisation of its contents and communication thereof to others without expressed authorisation are prohibited. Offenders will be held liable for payment of damages. All rights created by patent grant or registration of a utility model or design patent are reserved.

Copyright ©Continental AG. Transmittal, reproduction, dissemination and/or editing of this document as well as utilisation of its contents and communication thereof to others without expressed authorisation are prohibited. Offenders will be held liable for payment of damages. All rights created by patent grant or registration of a utility model or design patent are reserved.

43.15.2.1.2 Calculation Section for Pump control

This section contains the calculations of the following,

1. HPP_CTL_1 subsystem : Reference angle calculation, Pump efficiency calculation
2. HPP_CTL_2 subsystem : VCV control parameter calculation

43.15.2.1.2.1 Calculation for Pump Control

In this blocks the pump performance, the transition conditions for the state diagram, the reference angle and the timers for the start are calculated.

43.15.2.1.2.1.1 Calculation Overview

43.15.2.1.2.1.1.1 Reference angle calculation

The reference angle for the high pressure pump control is calculated here. The basic value is the angle of the camshaft at which the pump is mounted on. Depending on that angle, a correction angle is applied to consider VVT effects.

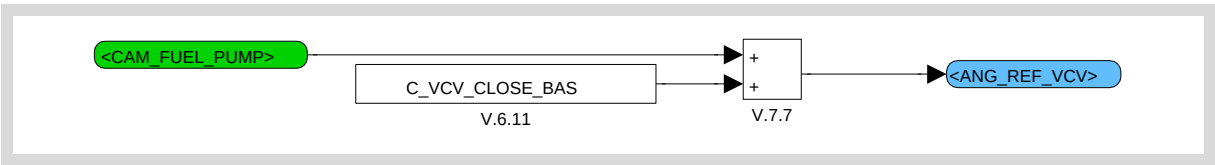

Figure 43.15.20:

43.15.2.1.2.1.1.2 Pump limits calculation with Small-quantity regulation

The maximum physically possible quantitiy per stroke that can be delivered by the pump is calibrated through C_MFP_MAX. However, this maximum quantity is affected by several factors, namely, fuel temperature, the injected fuel mass, the fuel pressure in the rail and the engine speed and as a result these influences are given by the maps as factors which decide the final maximum quantity at any particular time of operation.
These factors collectively affect the overall delivery efficieny of the pump and can be called as efficiency factors.

IP_FAC_FUEL_PUMP_EFF_TFU_N gives the dependancy of fuel temperature in the pump and engine speed. This factor reduces at higher fuel temperatures, since at high temperatures the pump tolerances increase along with decrease in fuel density causing lower delivery rates due to leakages.

IP_FAC_FUEL_PUMP_EFF_MFF_SP_N gives the dependancy of mass fuel flow set point for fuel pressure control and engine speed. This factor was included to accomidate the dead volume influence of the pump.However, this calibration need not be used anymore for dead volume effects, since the dead volume influence is now covered through MFP_OFS.

IP_FAC_FUEL_PUMP_EFF_FUP_N gives the dependancy of fuel pressure setpoint and engine speed. This factor is usually high at lower speeds and low at higher engine speeds. It is basically introduced to compensate for engine load. As the fuel pressure in the rail is higher with higher engine loads, the work done by the pump to overcome this pressure and deliver the fuel into the rail is higher.

The pump chamber dead volume influence is covered under two maps.
IP_MFP_OFS gives the dead-volume influence based on fuel pressure and engine speed. The dead volume

varies with engine speed and fuel quantitiy inside the pump chamber. The dead volume influence at lower engine speed with lower quantitiy is lower (since, the quanitity is low and the fuel compression is easier) and the same influence is higher at higher engine speed with higher quantity (since, the quantity is high and the fuel compression requires more work from the pump).
Also, change in temperature changes the fuel density and hence the quantitiy. So, in order to consider this influence based on temperature, a calibration map is present (IP_MFP_OFS_TFU_ADD).

Since the ratio of engine cylinder to pump stroke affects the mass fuel delivered every stroke, a calibratable factor (C_FAC_FUEL_PUMP_CTL) can be used to consider this effect for calculation of fuel mass requested from the pump by the fuel pressure control.

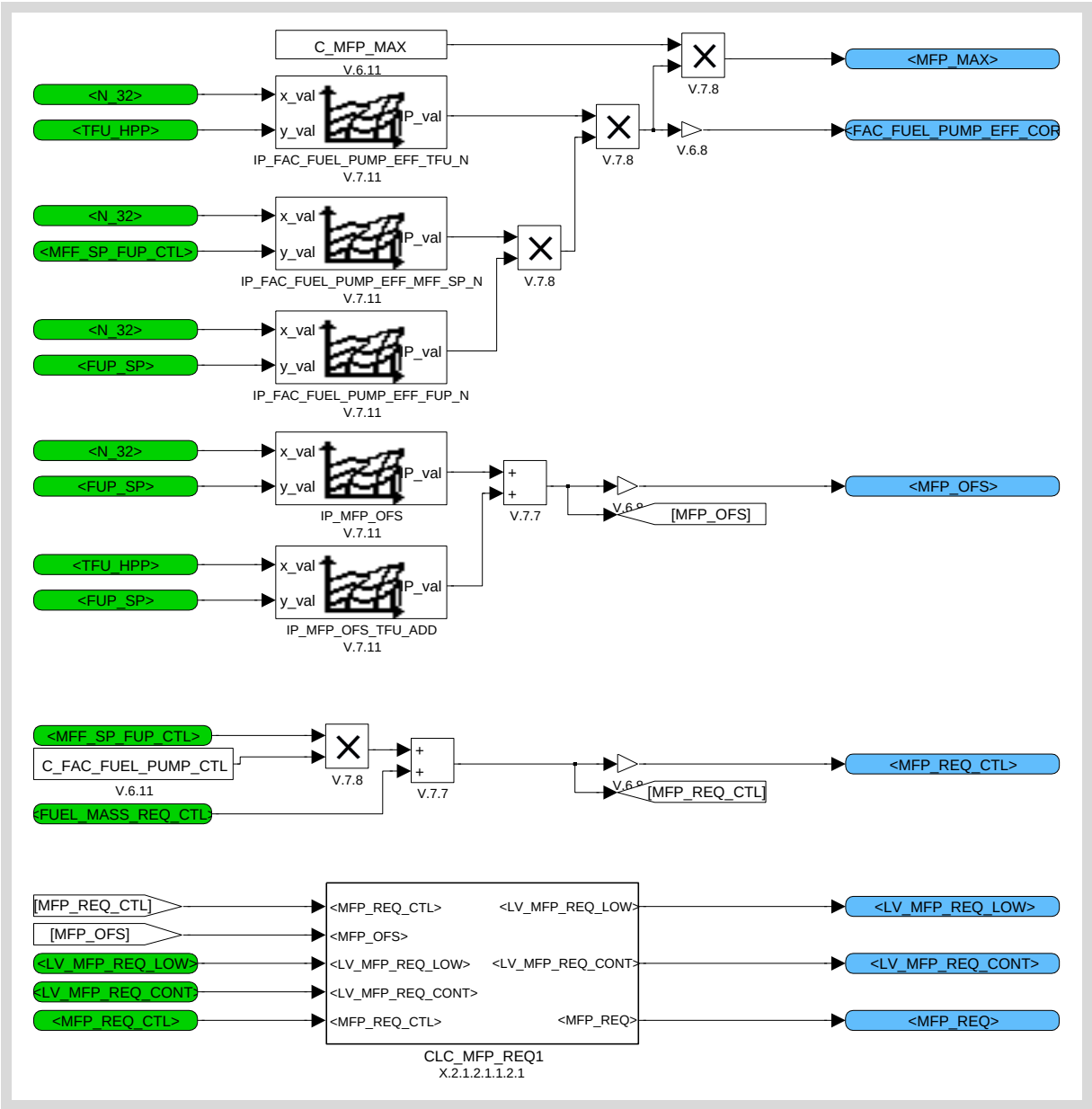

Figure 43.15.21:

Copyright ©Continental AG. Transmittal, reproduction, dissemination and/or editing of this document as well as utilisation of its contents and communication thereof to others without expressed authorisation are prohibited. Offenders will be held liable for payment of damages. All rights created by patent grant or registration of a utility model or design patent are reserved.

43.15.2.1.2.1.1.2.1 Small-quantity regulation

A small-quantity is recognized if the fuel mass requested by the controller is less than a certain calibrated threshold (C_MFP_REQ_MIN) and is de-recognized if the fuel mass request is higher than calibated threshold (C_MFP_REQ_MAX).
The small-quantity regulation can be activated manually through a switch (LC_MFP_REQ_L_ACT). This is provided in case the calibrations above are not present and, small quantity should not be recognized by mistake. This is mainly used during development phases.
Depending on whether the small-quantity was delivered in the previous recurrence or not, the activation for delivery of small-quantity for the current recurrence is decided using a switch. Every second delivery is deactivated, in case small-quantity flag is active. This working is explained below,
if the current requested quantity is lower than C_MFP_REQ_MIN, then this quantity is not considered for the fuel mass calculation, but if the quantity of the previous recurrence was also not considered (i.e. it was less than C_MFP_REQ_MIN), then the current quantity + the previous quantity will be considered for fuel mass calculation.
If the current requested quantity is higher than C_MFP_REQ_MAX, then, this quantitiy is delivered in the current recurrence.

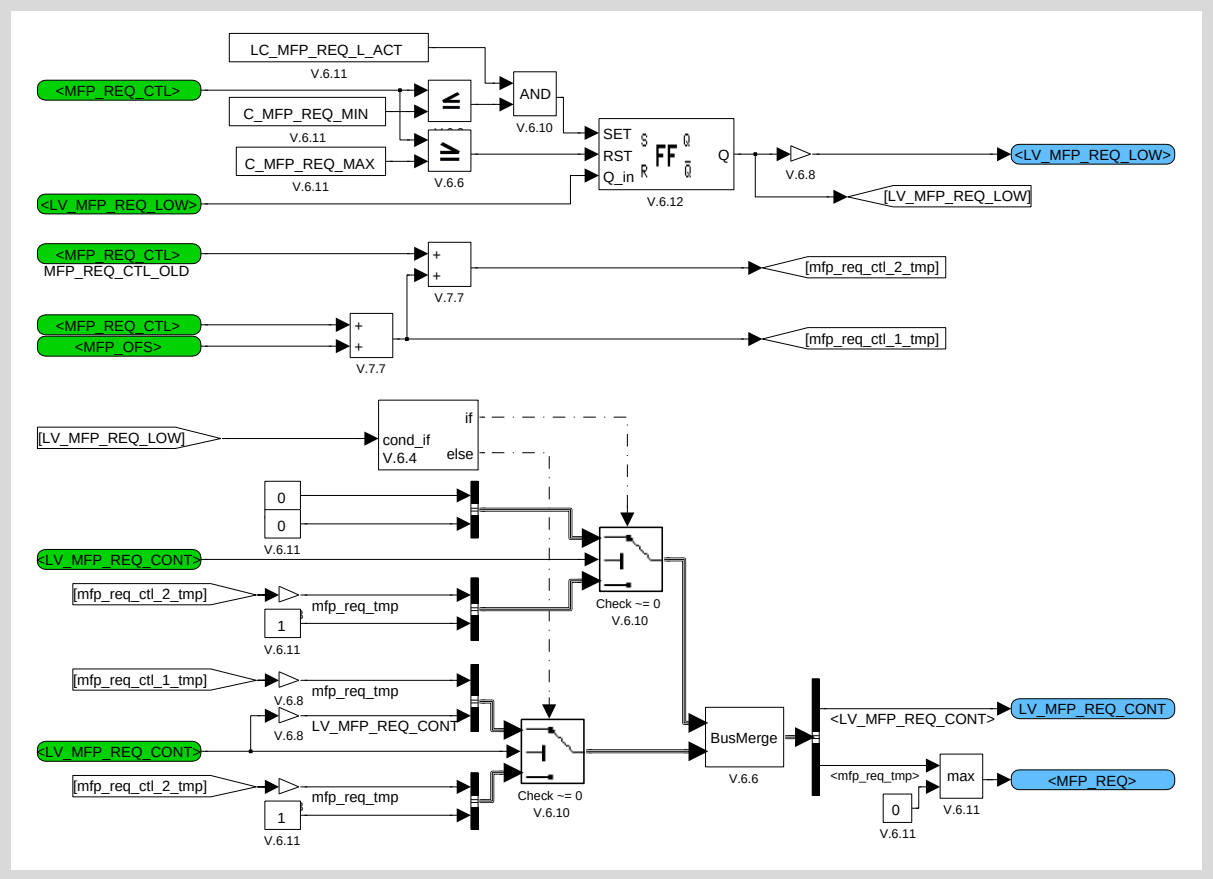

Figure 43.15.22:

43.15.2.1.2.1.1.3 State diagram coordination

The conditions for the state diagram for VCV control are calculated within this subsystem.

Copyright ©Continental AG. Transmittal, reproduction, dissemination and/or editing of this document as well as utilisation of its contents and communication thereof to others without expressed authorisation are prohibited. Offenders will be held liable for payment of damages. All rights created by patent grant or registration of a utility model or design patent are reserved.

The VCV runs in a time based operating mode untill the engine is synchronized and VCV control in crank based mode is initiated only after the engine is synchronized and regardless of the ignition key status.

The VCV control in start phase is triggered when,
1. Engine is running, but not synchronized
2. Start pulse is still applied to the VCV (T_VCV_MFP_START is still running), i.e. a constant current is applied to the VCV during start phase for a calibrated time duration.

The VCV control in open phase is triggered when,
1. No high pressure start is requested
2. Engine has not exited the start phase but synchronized
3. Limp home mode due to errors in fuel supply system is active
4. a request by external functionality is set
5. Start pulse is not applied to the VCV (T_VCV_MFP_START is zero)
6. No fuel mass is requested from fuel pressure control and from pump delivery
7. Fuel pressure difference (setpoint - actual value) is below a calibrated threshold (C_FUP_DIF_VCV_OPEN_THD).

The VCV is fully open in the open phase. No current is given to it in case of currentless open VCV and 100% current is given to it in case of currentless close VCV.

The VCV control in maximum delivery phase is triggered when,
1. Fuel mass requested from fuel pressure control exceeds the maximum delivery quantity and fuel pressure control deviation is positive
2. High pressure start is requested before engine has exited the start phase

The engine has to be synchronized for maximum delivery phase to be triggered.
The closed loop control for fuel pressure is inactive during the maximum delivery phase. The I controller is frozen in order to avoid winding up error when the fuel pressure control is active again.

The VCV control in request control phase is triggered when,
1. When VCV control is not in open phase
2. When VCV control is not in maximum delivery phase

The engine has to be synchronized for request control phase to be triggered.

The VCV control in test phase is triggered when,
1. When the calibration LC_PUMP_VOL_VCV_MAN is set
2. Engine is no longer in start phase

The engine has to be synchronized for test phase to be triggered.

Copyright ©Continental AG. Transmittal, reproduction, dissemination and/or editing of this document as well as utilisation of its contents and communication thereof to others without expressed authorisation are prohibited. Offenders will be held liable for payment of damages. All rights created by patent grant or registration of a utility model or design patent are reserved.

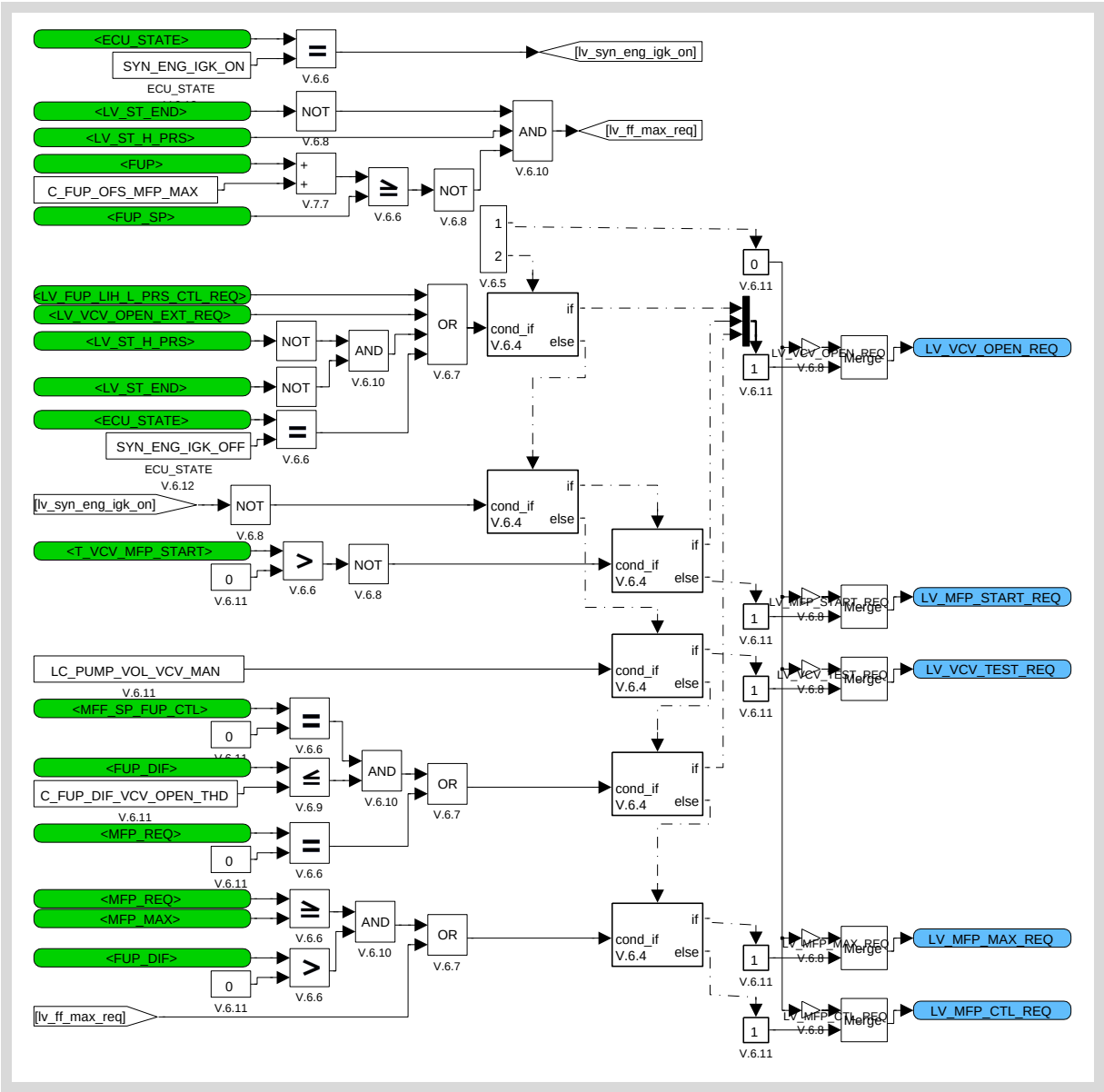

Figure 43.15.23:

43.15.2.1.2.2 Final Calculation of the Pump Control

This overview shows the state diagram and the blocks for the pump volume calculation and the actual determination of the closing and opening angle. The detailed description is below.

43.15.2.1.2.2.1 Determining the State of Pump volume control

Depending on the output of the state diagram a corresponding block for the pump volume calculation is selected. The VCV state switches from one control state to other is set depending on which state request flag is set. The signal flow in all the state subsystems is from bottom to top, i.e. the bottom most filter is checked first and the flow proceeds up to the top most filter until one of the state request flags are active and request for a particular VCV state to be set.

Copyright ©Continental AG. Transmittal, reproduction, dissemination and/or editing of this document as well as utilisation of its contents and communication thereof to others without expressed authorisation are prohibited. Offenders will be held liable for payment of damages. All rights created by patent grant or registration of a utility model or design patent are reserved.

43.15.2.1.2.2.1.1 State of the Pump Control after Test phase

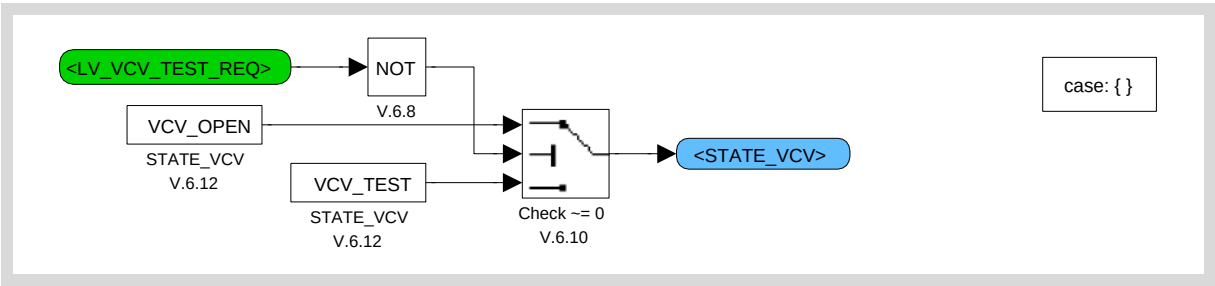

Figure 43.15.24:

43.15.2.1.2.2.1.2 State of the Pump Control after Maximum open phase

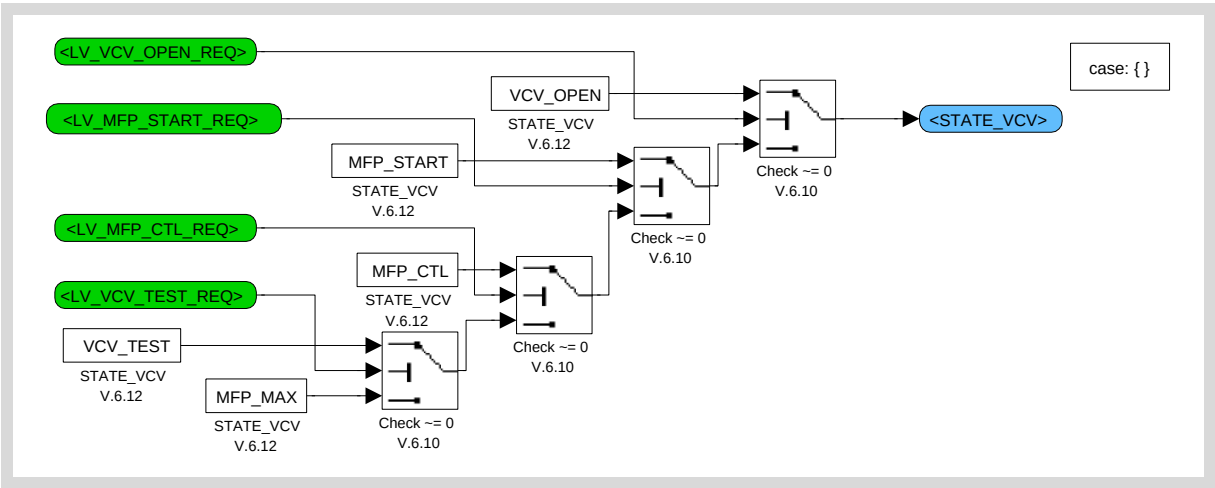

Figure 43.15.25:

Copyright ©Continental AG. Transmittal, reproduction, dissemination and/or editing of this document as well as utilisation of its contents and communication thereof to others without expressed authorisation are prohibited. Offenders will be held liable for payment of damages. All rights created by patent grant or registration of a utility model or design patent are reserved.

43.15.2.1.2.2.1.3 State of the Pump Control after Control phase

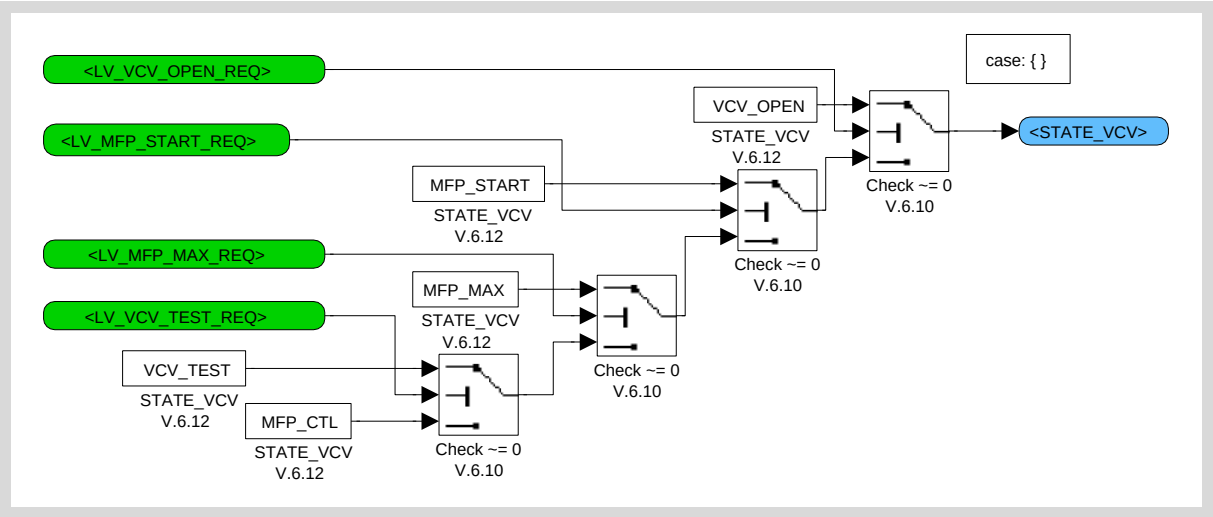

Figure 43.15.26:

43.15.2.1.2.2.1.4 State of the Pump Control after Opening phase

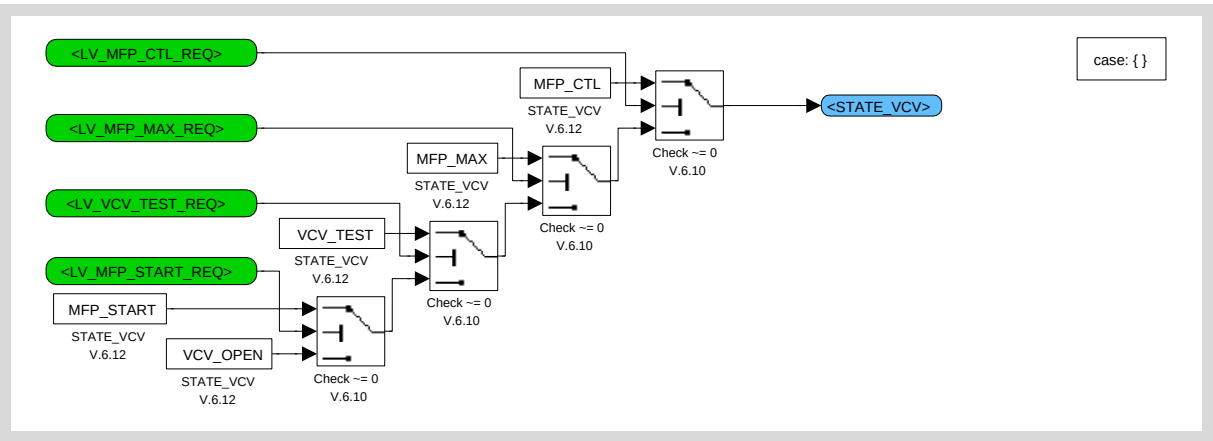

Figure 43.15.27:

Copyright ©Continental AG. Transmittal, reproduction, dissemination and/or editing of this document as well as utilisation of its contents and communication thereof to others without expressed authorisation are prohibited. Offenders will be held liable for payment of damages. All rights created by patent grant or registration of a utility model or design patent are reserved.

43.15.2.1.2.2.1.5 State of the Pump Control after Start phase

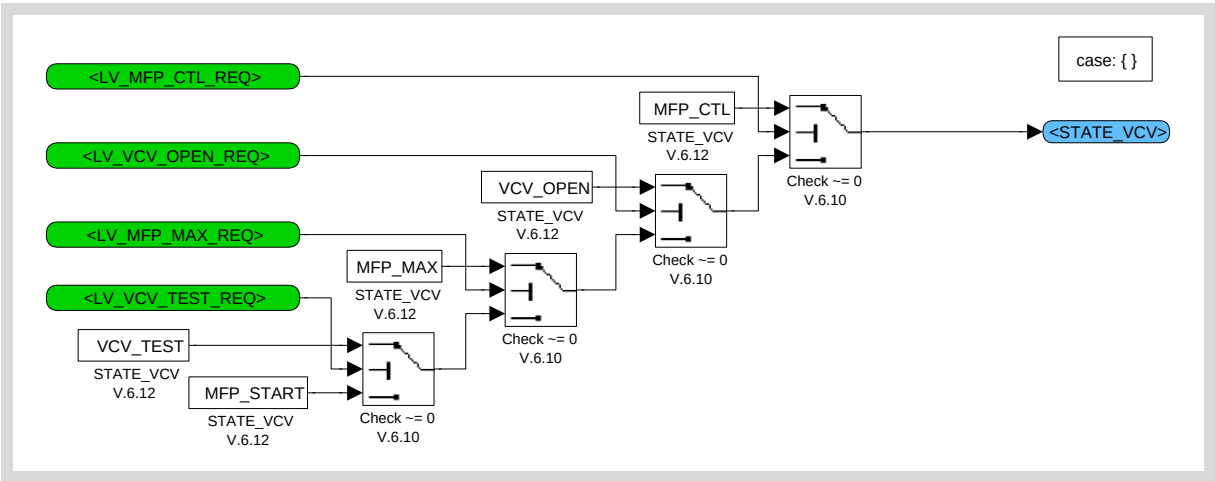

Figure 43.15.28:

43.15.2.1.2.2.2 Pump Volume control calculation

The amount of pump volume (based on crank angle) needed for the delivery of requested mass fuel flow is calculated in this section. The pump performance control depends on the different VCV states. Each state of VCV has a different pump performance control calculation.
The calibratable map (IP_VCV_CLOSE_RNG) gives the crank angle for VCV closing in order to have the effective volume needed to deliver the requested mass fuel.
The dead volume influence is considered through MFP_OFS in each of the below relevant subsystems.

43.15.2.1.2.2.2.1 Pump volume control calculation for 'control mode'

This block calculates the pump performance needed in one pump stroke based on the requested fuel mass by the controller.

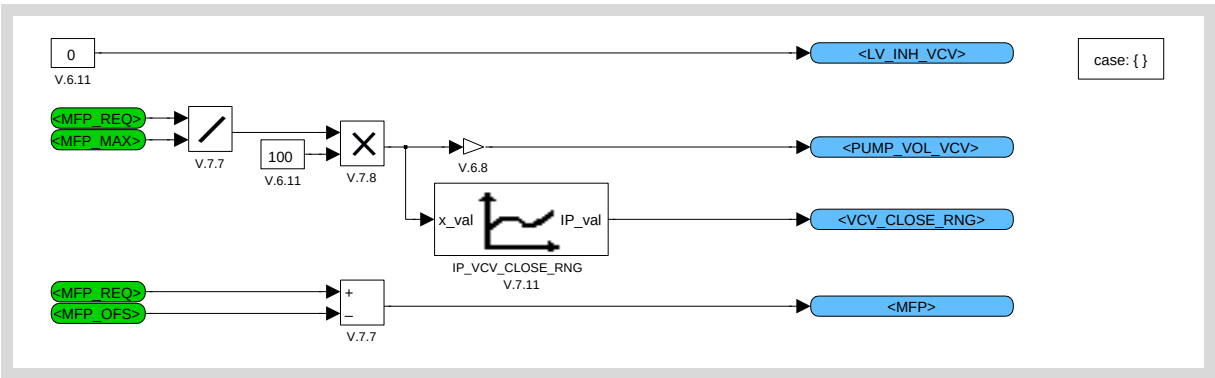

Figure 43.15.29:

Copyright ©Continental AG. Transmittal, reproduction, dissemination and/or editing of this document as well as utilisation of its contents and communication thereof to others without expressed authorisation are prohibited. Offenders will be held liable for payment of damages. All rights created by patent grant or registration of a utility model or design patent are reserved.

43.15.2.1.2.2.2.2 Pump volume control calculation for 'minimum mode'

This block represent the case of no pump activity.

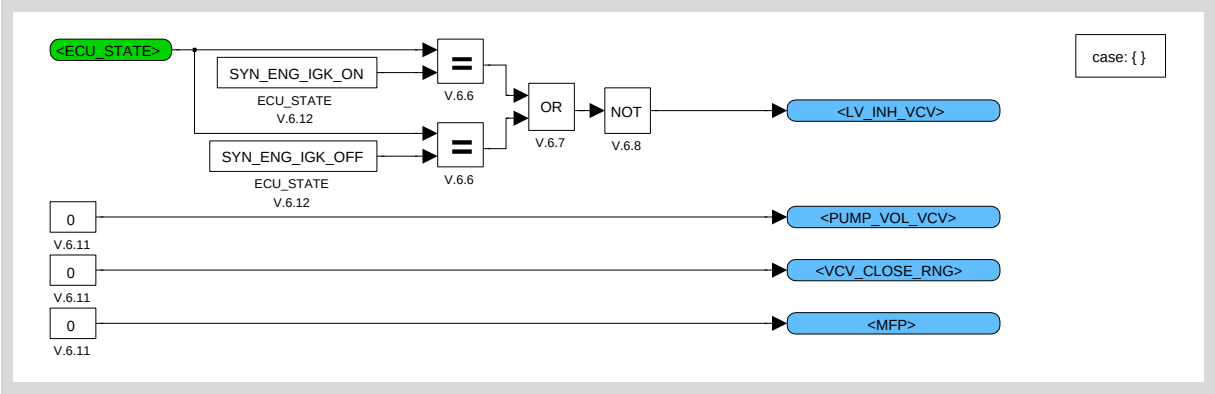

Figure 43.15.30:

43.15.2.1.2.2.2.3 Pump volume control calculation for 'maximum mode'

In case of a request for maximum pump performance (100% delivery) this block is calculated.

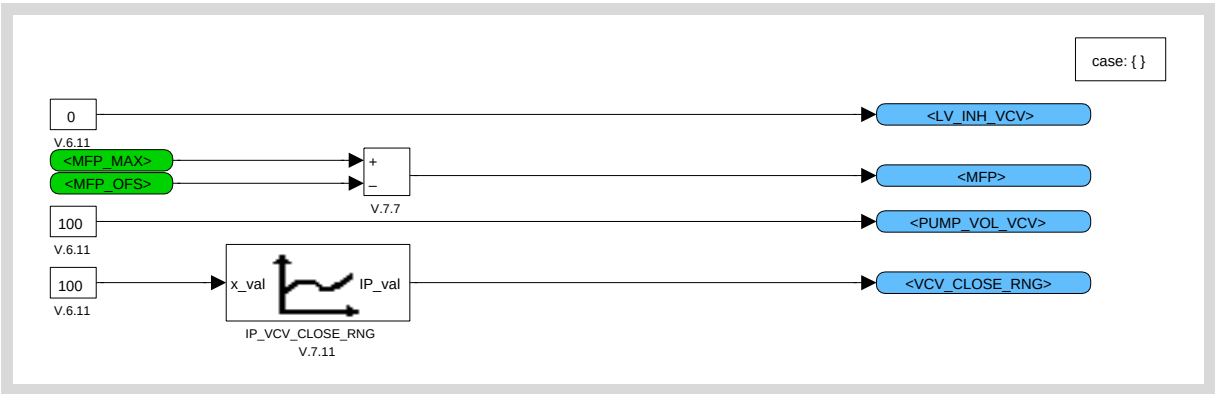

Figure 43.15.31:

43.15.2.1.2.2.2.4 Pump volume control calculation for 'start mode'

The calculation for start mode is same as maximum mode, i.e. for full delivery.
For the start, a permanent on-signal can be applied to the solenoid of the VCV. If the temperature is too low it can be necessary to apply a PWM signal instead of a permanent signal due to a too high current through the solenoid.

Copyright ©Continental AG. Transmittal, reproduction, dissemination and/or editing of this document as well as utilisation of its contents and communication thereof to others without expressed authorisation are prohibited. Offenders will be held liable for payment of damages. All rights created by patent grant or registration of a utility model or design patent are reserved.

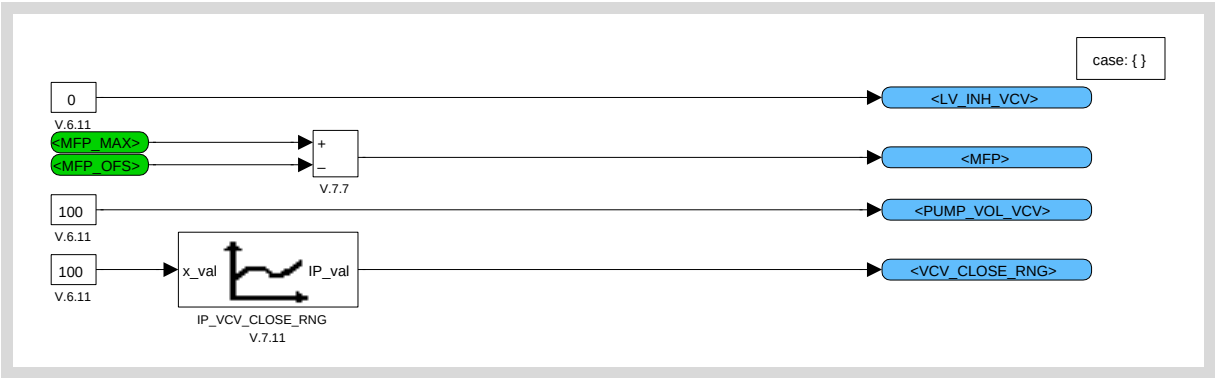

Figure 43.15.32:

43.15.2.1.2.2.2.5 Pump volume control calculation for 'test mode'

This block is executed for test purposes. Through the calibration C_PUMP_VOL_VCV_MAN, the performance for delivery can be set.

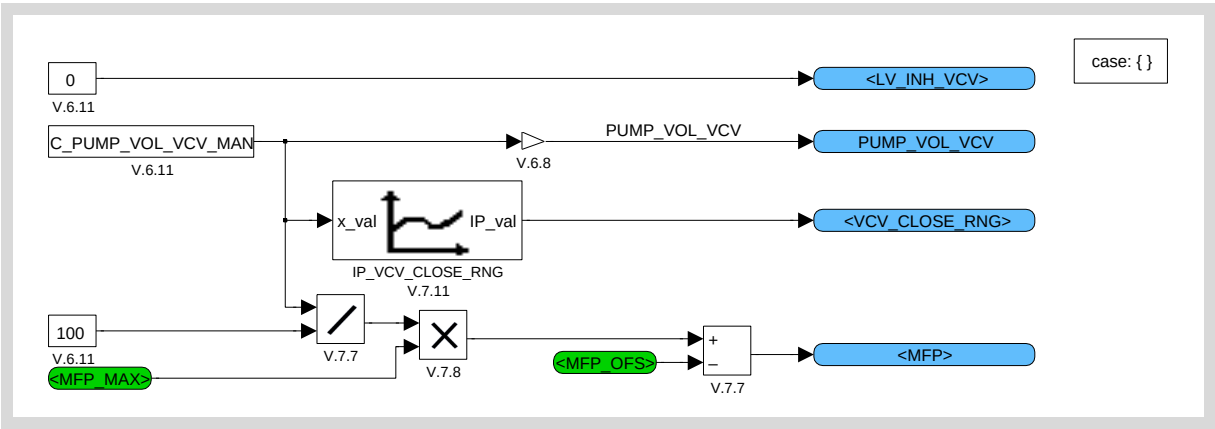

Figure 43.15.33:

43.15.2.1.2.2.3 Actuator calculation depending on used pump type

Depending on the variant coding, the actuator calculation for currentless open or currentless closed VCV is selected.

Copyright ©Continental AG. Transmittal, reproduction, dissemination and/or editing of this document as well as utilisation of its contents and communication thereof to others without expressed authorisation are prohibited. Offenders will be held liable for payment of damages. All rights created by patent grant or registration of a utility model or design patent are reserved.

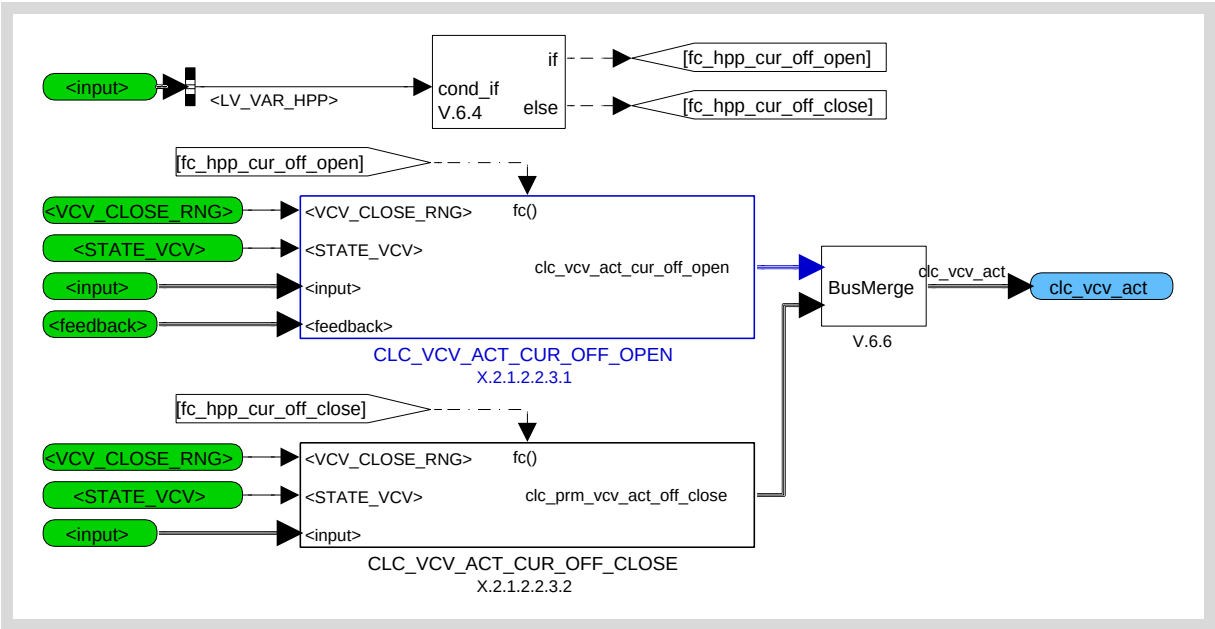

Figure 43.15.34:

43.15.2.1.2.2.3.1 Actuator calculation for currentless open VCV

Actuator calculation for currentless open VCV is split into control of VCV soft landing mode (for noise reduction and optimization of VCV wear) and calculation of VCV control parameters.

Copyright ©Continental AG. Transmittal, reproduction, dissemination and/or editing of this document as well as utilisation of its contents and communication thereof to others without expressed authorisation are prohibited. Offenders will be held liable for payment of damages. All rights created by patent grant or registration of a utility model or design patent are reserved.

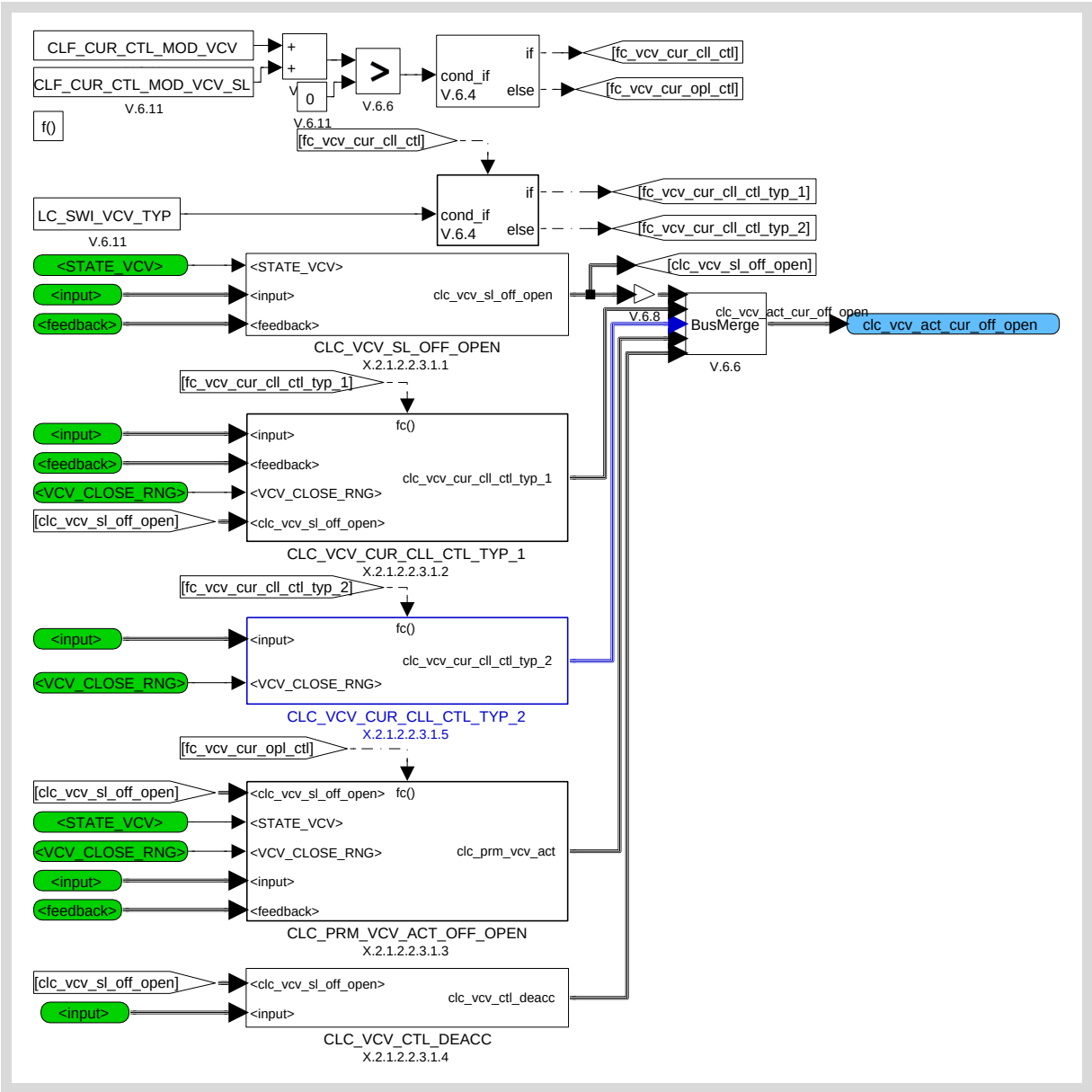

Figure 43.15.35:

43.15.2.1.2.2.3.1.1 Calculation of VCV soft landing control

To minimize noise of VCV actuation and VCV wear, a lower current is applied to VCV during certain conditions (especially below engine speeds of 1000 rpm). This function as a whole is called as soft landing (SL) function of the VCV.

The SL application is based on the working points of the VCV based on the battery voltage (VB) and temperature of the VCV (given in terms of resistance of the VCV, R_VCV). In order to cover component tolerances an adaptation for SL is done based on fuel pressure analysis. The adaptation is also re- learnt if the working points (VB, R_VCV) at which the adaptation was performed have shifted by calibrated thresholds.

Soft landing current profile :

Copyright ©Continental AG. Transmittal, reproduction, dissemination and/or editing of this document as well as utilisation of its contents and communication thereof to others without expressed authorisation are prohibited. Offenders will be held liable for payment of damages. All rights created by patent grant or registration of a utility model or design patent are reserved.

In order to minimize noise of VCV actuation and VCV wear, the VCV current profile is modified in order to reduce the peak current height in the pull-in phase and have an extended hold phase (pwm based).
There is another additional stage in the SL current profile called pick-up phase. This is introduced in order to identify the right current height to be applied during the adaptation for the pull-in phase.
The adaptation is a two step process. First, the pick-up adaptation is done and next the pull-in adaptation is done.

Pick-up adaptation – During pick-up adaptation, the pull-in value is not changed. The adaptation is done continuously in a step wise manner, by decreasing the current in a pre-calculated way untill the current is so less, that the VCV cannot be closed anymore. This is known, when we see a pressure drop in the system, as the VCV is not closed completely and this leads to a pressure drop in the system due to some of the pressurized fuel returning to the low pressure side due to a still open VCV. Then, the last applied value added by an offset is freezed as the adapted value of the pick-up phase of the VCV.

Pull-adaptation – During pull-in adaptation, the pick-up adaptation is already completed. Based on the pick-up adaptation, the pull-in adaptation is freezed. The pull-in adaptation is done similar to the pick-up adaptation as explained above.

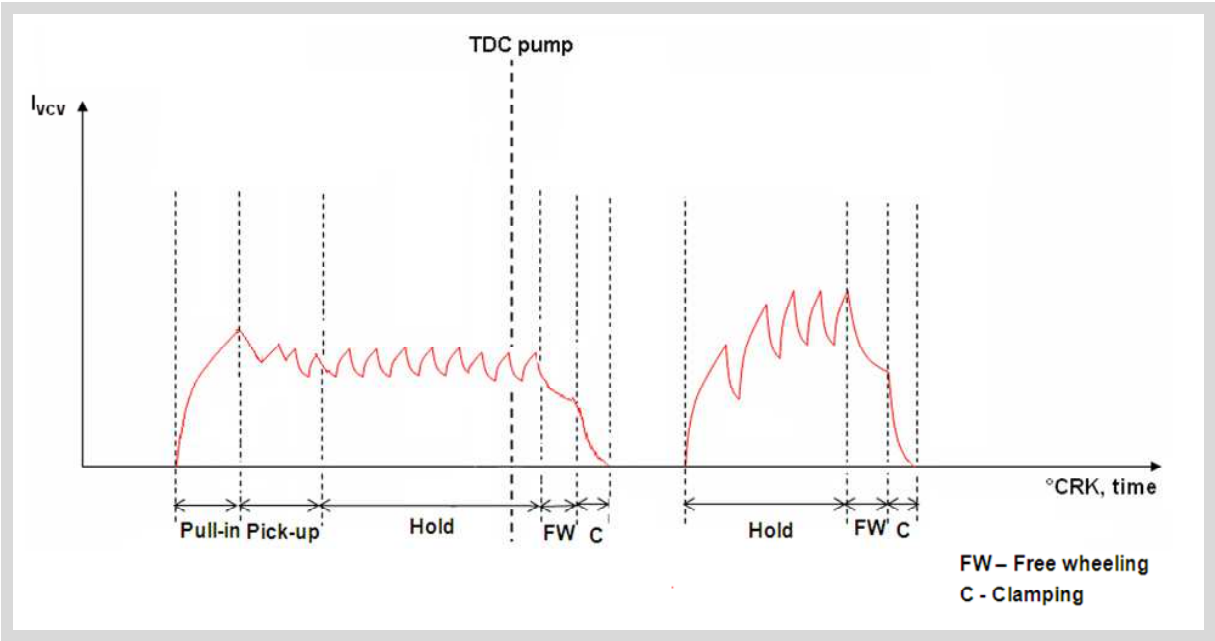

Figure 43.15.36: Current profile during active soft landing operation of VCV

SL calculation is split into coordination of soft landing functionality and adaptation of parameters for VCV current control.

Copyright ©Continental AG. Transmittal, reproduction, dissemination and/or editing of this document as well as utilisation of its contents and communication thereof to others without expressed authorisation are prohibited. Offenders will be held liable for payment of damages. All rights created by patent grant or registration of a utility model or design patent are reserved.

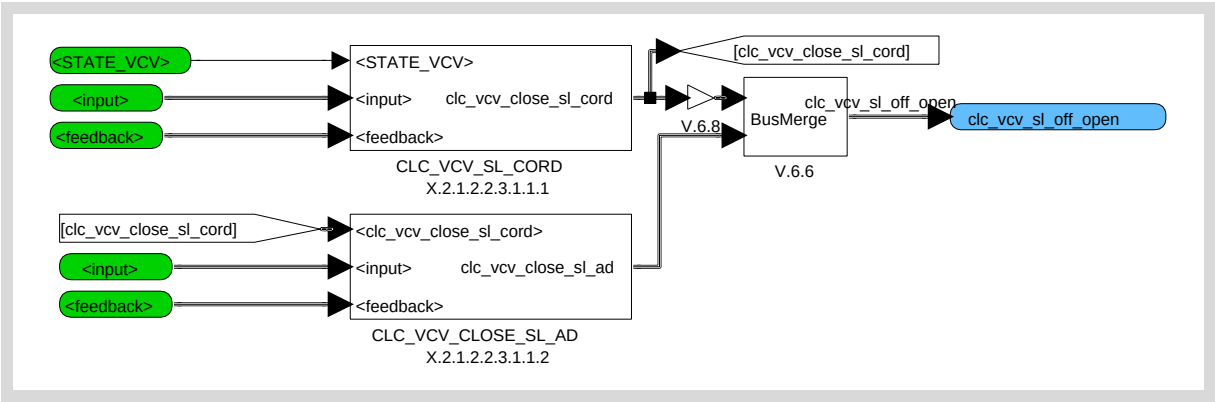

Figure 43.15.37: Figure 7 : Current profile during active soft landing operation of VCV

43.15.2.1.2.2.3.1.1.1 Coordination of VCV soft landing functionality

The coordination for VCV soft landing (SL) functionality calculates authorizations for VCV soft landing based on the environmental conditions and on the current VCV SL status. Additionally auxiliary values are stored to coordinate the adapted system based on the system working points.

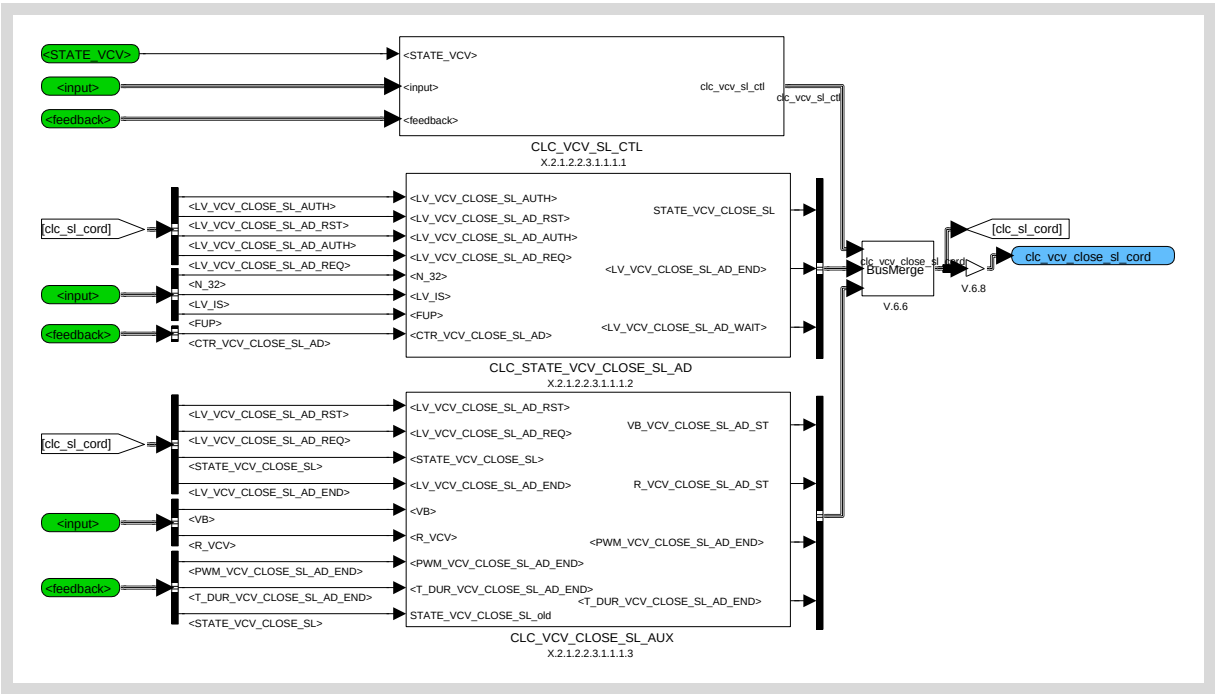

Figure 43.15.38:

43.15.2.1.2.2.3.1.1.1.1 Authorization for VCV soft landing functionality

Several authorization variables define the behavior of VCV soft landing functionality. Main authorizations activate soft landing during VCV closing and/or opening. In the adaptation subsystem, the VCV SL adaptation calculations are performed.

Copyright ©Continental AG. Transmittal, reproduction, dissemination and/or editing of this document as well as utilisation of its contents and communication thereof to others without expressed authorisation are prohibited. Offenders will be held liable for payment of damages. All rights created by patent grant or registration of a utility model or design patent are reserved.

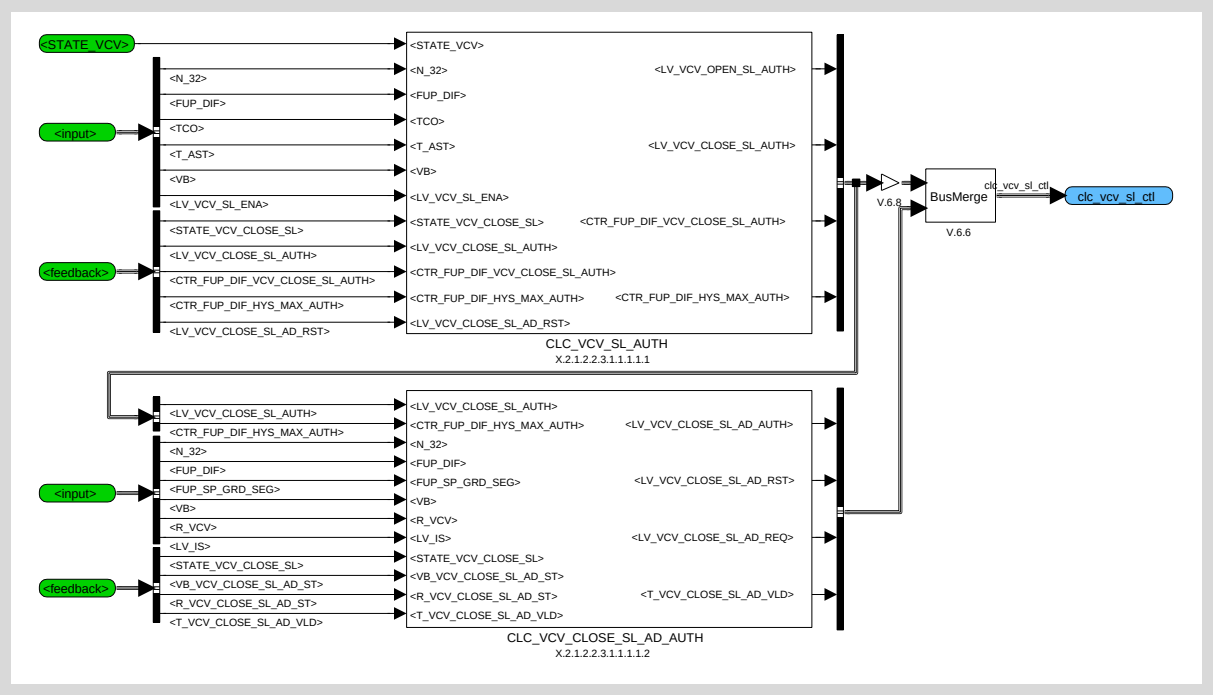

Figure 43.15.39:

43.15.2.1.2.2.3.1.1.1.1.1 Main authorizations for activation of VCV soft landing

Main authorizations for VCV soft landing are dependent to environmental conditions, namely,

1. After start time – only after a calibratable after start time of C_T_AST_VCV_SL_MIN is passed, SL is enabled. This is done to ensure that the VCV control has stabilized after start.

2. Battery voltage – For SL to be applied, sufficient battery voltage needs to be ensured, this is done by checking it against a calibratable threshold C_VB_VCV_SL_MIN. The current duration is usually extended for the SL operation of the VCV and if the battery voltage is too low, the VCV actuation pulse would become too long for one pump period.

3. Coolant temperature – The coolant temperature has the strongest influence on the VCV temperature. So, in order to avoid SL in case of higher temperatures, the TCO is checked whether its in between the calibrated minimum and maximum temperature thresholds of C_TCO_VCV_SL_MIN and C_TCO_VCV_SL_MAX respectively.

For VCV close SL, there are additional conditions which decide the initiation of SL, namely,

1. Engine speed – SL can only be applied upto particular range of engine speed, because with increased engine speed, the pump period become too short for applying extended VCV actuation pulses during SL.
So, as long as the engine speed is below the calibrated threshold C_N_VCV_CLOSE_SL_HYS_MIN and not above the calibrated threshold C_N_VCV_CLOSE_SL_HYS_MAX, SL is authorized.

2. Fuel pressure deviation – SL can be active only if it does not interfere with the fuel pressure control. In order to ensure that SL is not active in case of high fuel pressure deviations, a hysteresis function is built. So, as long as the fuel pressure deviation is below the calibrated threshold C_FUP_DIF_VCV_CLOSE_SL_HYS_MIN and not above the calibrated threshold C_FUP_DIF_VCV_CLOSE_SL_HYS_MAX, SL is authorized.

Copyright ©Continental AG. Transmittal, reproduction, dissemination and/or editing of this document as well as utilisation of its contents and communication thereof to others without expressed authorisation are prohibited. Offenders will be held liable for payment of damages. All rights created by patent grant or registration of a utility model or design patent are reserved.

If the engine speed and fuel pressure deviation are within the respective thresholds, then a calibrated waiting time C_T_DLY_VCV_CLOSE_SL_AUTH has to be passed, in order to activate SL for VCV closing. This is to ensure that the system is stable before initiating SL.

SL for VCV opening activates the deceleration pulse. Similar to SL for VCV closing, there are engine speed and fuel pressure deviation dependencies for activating SL for VCV opening and are explained below,

1. Engine speed – As long as the engine speed is below the calibrated threshold C_N_VCV_OPEN_SL_HYS_MIN and not above the calibrated threshold C_N_VCV_OPEN_SL_HYS_MAX, SL for VCV opening is authorised.

2. Fuel pressure deviation – As long as the fuel pressure deviation is below the calibrated threshold C_FUP_DIF_VCV_OPEN_SL_HYS_MIN and not above the calibrated threshold C_FUP_DIF_VCV_OPEN_SL_HYS_MAX, SL for VCV opening is authorised.

3. State of SL for VCV closing – In addition to above two parameters, the SL for VCV opening depends on the state of SL for VCV closing. SL for VCV opening is usually only active, if the SL adaptation for VCV closing is finished.

The difference in the hysteresis thresholds between SL for VCV closing and SL for VCV opening is, that the thresholds for VCV opening are more narrower that for VCV closing.

Similar to SL for VCV closing, a calibrated waiting time C_T_DLY_VCV_OPEN_SL_AUTH has to be passed, in order to activate SL for VCV opening. This is to ensure that the system is stable before initiating SL.

After the authorisation is given to activate VCV SL for closing, the fuel pressure deviation is monitored in order to ensure that SL operation does not cause un-wanted pressure drops in the system when its active.
Two counters are operated parallely depending on the fuel pressure deviation observed.
In case the fuel pressure drops are witihin limits (lv_fup_dif_hys_min) when SL is active, then CTR_FUP_DIF_VCV_CLOSE_SL_AUTH is incremented.
In case the fuel pressure drops are more than the allowed limits (lv_fup_dif_hys_min) when SL is active, then CTR_FUP_DIF_HYS_MAX_AUTH is incremented.
As long as the fuel pressure drop is within limits, i.e. CTR_FUP_DIF_VCV_CLOSE_SL_AUTH is greater than the calibratable threshold C_CTR_FUP_DIF_VCV_SL_AUTH_MAX, then the counter CTR_FUP_DIF_HYS_MAX_AUTH is reset.
In case the fuel pressure drop is beyond the limits, the counter CTR_FUP_DIF_HYS_MAX_AUTH is incremented and triggers SL adaptation reset which is described in the next subsystem.

Copyright ©Continental AG. Transmittal, reproduction, dissemination and/or editing of this document as well as utilisation of its contents and communication thereof to others without expressed authorisation are prohibited. Offenders will be held liable for payment of damages. All rights created by patent grant or registration of a utility model or design patent are reserved.

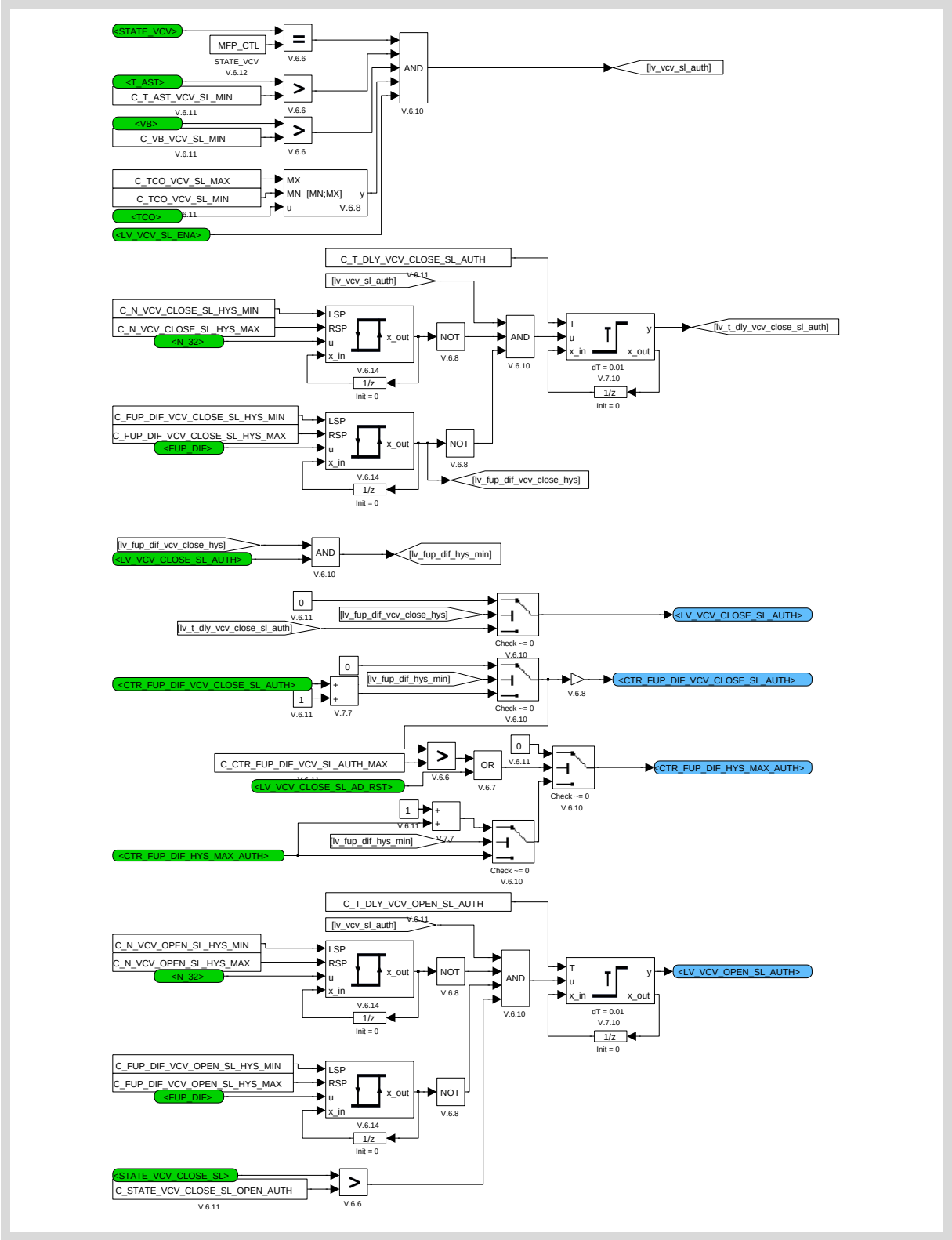

Figure 43.15.40:

Copyright ©Continental AG. Transmittal, reproduction, dissemination and/or editing of this document as well as utilisation of its contents and communication thereof to others without expressed authorisation are prohibited. Offenders will be held liable for payment of damages. All rights created by patent grant or registration of a utility model or design patent are reserved.

43.15.2.1.2.2.3.1.1.1.1.2 Control of adaptations for soft landing during VCV closing

VCV current adaptation during VCV closing can be activated in steady-state conditions. Essential parameters (working points) affecting VCV actuation are compared between values stored during last adaptation against current ones. In case of a too high deviation, a reset of adaptation or request for re-adaptation is set.

The adaptation authorisation for VCV closing SL depends on several conditions,
1. The main authorisation for VCV closing SL should be active
2. The engine should be in idle speed state and the engine speed to be within the calibratable threshold of C_N_MAX_VCV_SL_AD_AUTH
3. The fuel pressure setpoint gradient to be within the calibratable threshold of C_FUP_SP_GRD_VCV_SL_AD_AUTH
4. The fuel pressure deviation to be within the calibratable threshold of C_FUP_DIF_VCV_SL_AD_AUTH

If the above conditions are met, then a calibrated waiting time C_T_DLY_VCV_CLOSE_SL_AD_AUTH has to be passed, in order to activate SL adaptation for VCV closing. This is to ensure that the system is stable before initiating SL adaptation.

The adaptation reset for VCV closing SL is active depending on several conditions,
1. Either the PWM or T_DUR adaptation should be in progress or Adaptation should have already been completed and applied. These states are indicated from STATE_VCV_CLOSE_SL.

2. The change in Battery voltage at the start of adaptation (stored) with respect to the current battery voltage is compared against calibrated thresholds. These thresholds are different depending on whether an adaptation is currently active or not. If currently an adaptation is active, then C_VB_DIF_MAX_CLOSE_SL_RST_AD is considered and if adaptation is not active, then C_VB_DIF_MAX_CLOSE_SL_RST is considered.

3. The change in resistance of VCV at the start of adaptation (stored) with respect to the current VCV resistance is compared against calibrated thresholds. These thresholds are different depending on whether an adaptation is currently active or not. If currently an adaptation is active, then C_R_DIF_MAX_CLOSE_SL_RST_AD is considered and if adaptation is not active, then C_R_DIF_MAX_CLOSE_SL_RST is considered.

4. The counter CTR_FUP_DIF_HYS_MAX_AUTH is greater than calibrated threshold C_CTR_FUP_DIF_HYS_MAX_AUTH. As explained in the previous subsystem, if there are existing pressure drops even after adaptation, then it indicates a wrong adaptation.

5. In order to also consider the periodically new adaptation after a definite time interval, the calibatable time threshold C_T_MAX_VCV_CLOSE_SL_AD_VLD is considered.

As long as the working points, VB (Battery voltage) and R_VCV (VCV resistance) have not deviated much, then the current learnt adaptation is sufficient to be used. A new adaptation is requested if VB and R_VCV have changed when compared to their last stored values when the previous adaptation was done.
Change in VB is compared against the calibratable threshold C_VB_DIF_MAX_VCV_CLOSE_SL_REQ and
Change in R_VCV is compared against the calibratable threshold C_R_DIF_MAX_VCV_CLOSE_SL_REQ.

Copyright ©Continental AG. Transmittal, reproduction, dissemination and/or editing of this document as well as utilisation of its contents and communication thereof to others without expressed authorisation are prohibited. Offenders will be held liable for payment of damages. All rights created by patent grant or registration of a utility model or design patent are reserved.

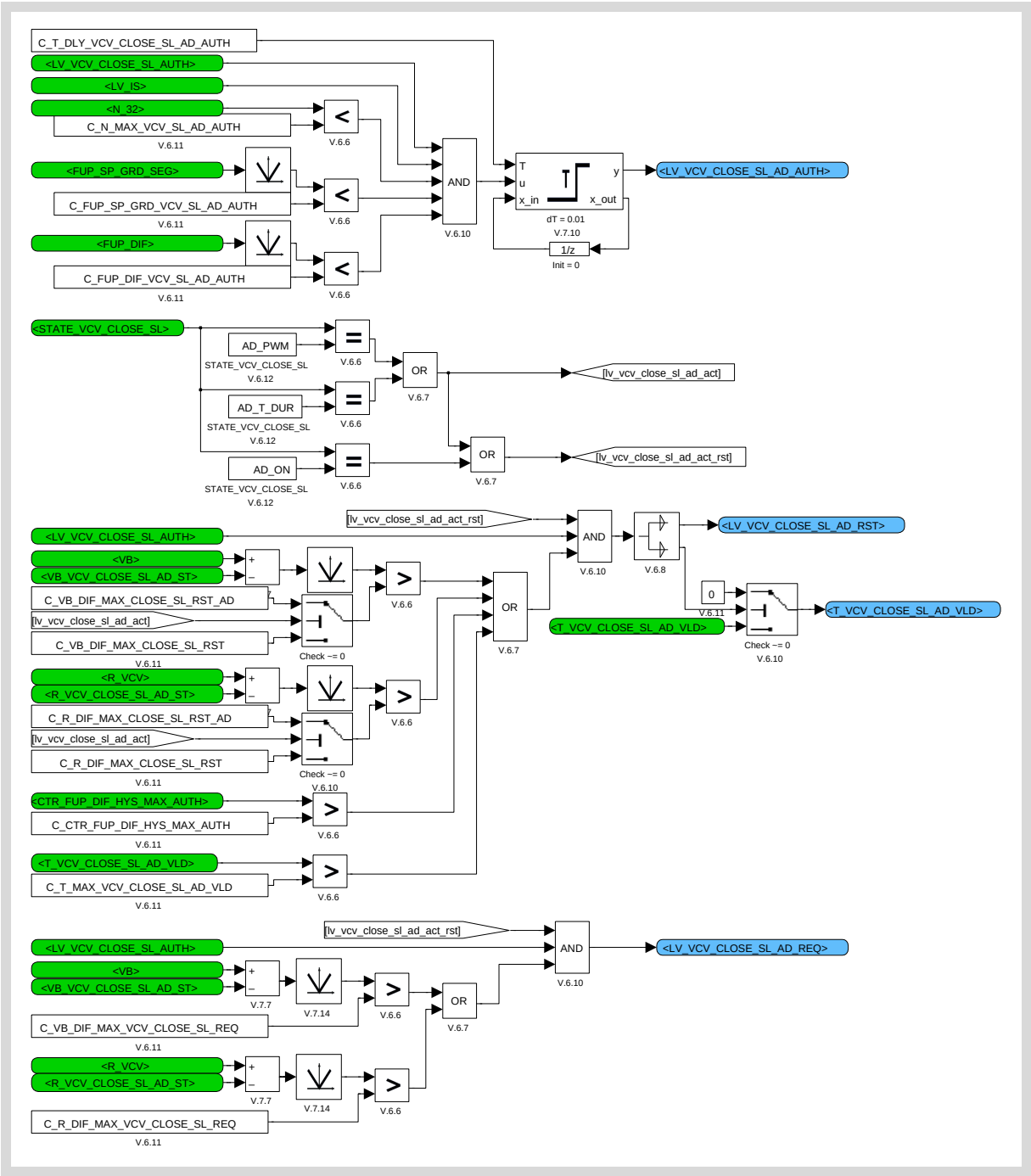

Figure 43.15.41:

43.15.2.1.2.2.3.1.1.1.2 Status of soft landing during VCV closing

Status of soft landing during VCV closing consists of following states:
0 - no soft landing during VCV closing active
1 - soft landing during VCV closing active with default parameters
2 - adaptation of duty-cycle for VCV holding phase
3 - adaptation of pull-in time for VCV peak (pull-in) phase

Copyright ©Continental AG. Transmittal, reproduction, dissemination and/or editing of this document as well as utilisation of its contents and communication thereof to others without expressed authorisation are prohibited. Offenders will be held liable for payment of damages. All rights created by patent grant or registration of a utility model or design patent are reserved.

4 - adapted soft landing during VCV closing active
The adaptation for VCV closing SL is completed if the counter CTR_VCV_CLOSE_SL_AD is greater than the calibrated counter thresholds for PWM adaptation (C_CTR_MAX_VCV_CLOSE_SL_AD_PWM) or T_DUR adaptation (C_CTR_MAX_VCV_CLOSE_SL_AD_T_DUR).

The adaptation for VCV closing SL is 'on hold', i.e. a condition favourable to initiate an adaptation is in anticipation when,
1. VCV close SL is authorized
2. Engine is in idle speed
3. Engine speed is less than the calibrated threshold C_N_MAX_VCV_SL_AD_AUTH
4. The last adaptation learning process has not yet ended
5. Fuel pressure is less than the calibrated threshold C_FUP_MAX_VCV_SL_AD_AUTH

The state 'AD_PWM' represents pick-up adaptation under progress. The pick-up adaptation is completed when the counter crosses the calibrated threshold, C_CTR_MAX_VCV_CLOSE_SL_AD_PWM.
The state 'AD_T_DUR' represents pull-in adaptation under progress. The pull-in adaptation is completed when the counter crosses the calibrated threshold, C_CTR_MAX_VCV_CLOSE_SL_AD_T_DUR.

The state switch between 'AD_PWM' and 'AD_T_DUR' is determined based on the comparison of the adaptation counter value and calibrated counter thresholds of the repsective states.

Figure below shows the counter status CTR_VCV_CLOSE_SL_AD during the different states of the SL adaptation of VCV.

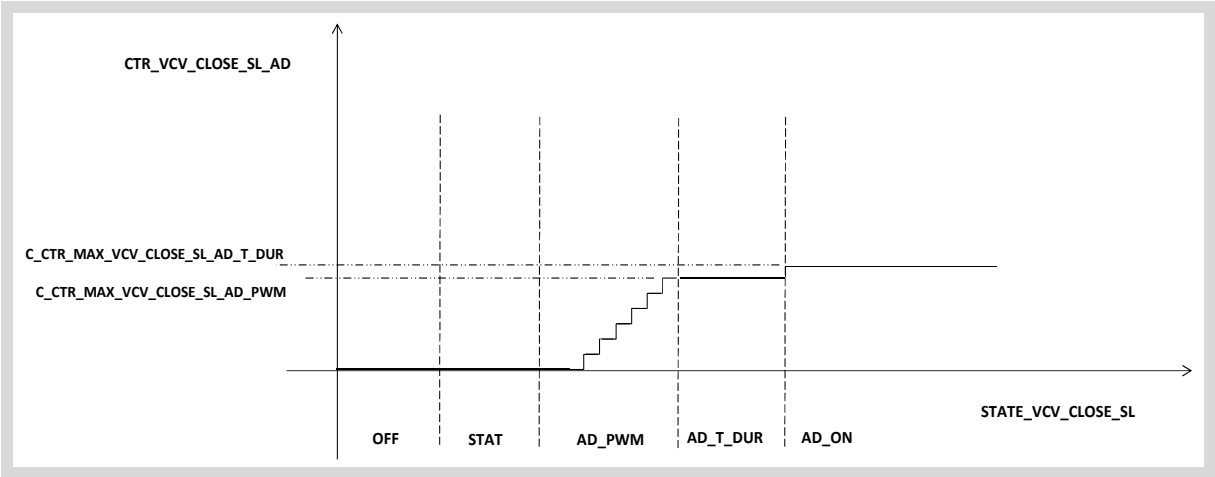

Figure 43.15.42: Status of SL adaptation counter at different states of VCV SL

Copyright ©Continental AG. Transmittal, reproduction, dissemination and/or editing of this document as well as utilisation of its contents and communication thereof to others without expressed authorisation are prohibited. Offenders will be held liable for payment of damages. All rights created by patent grant or registration of a utility model or design patent are reserved.

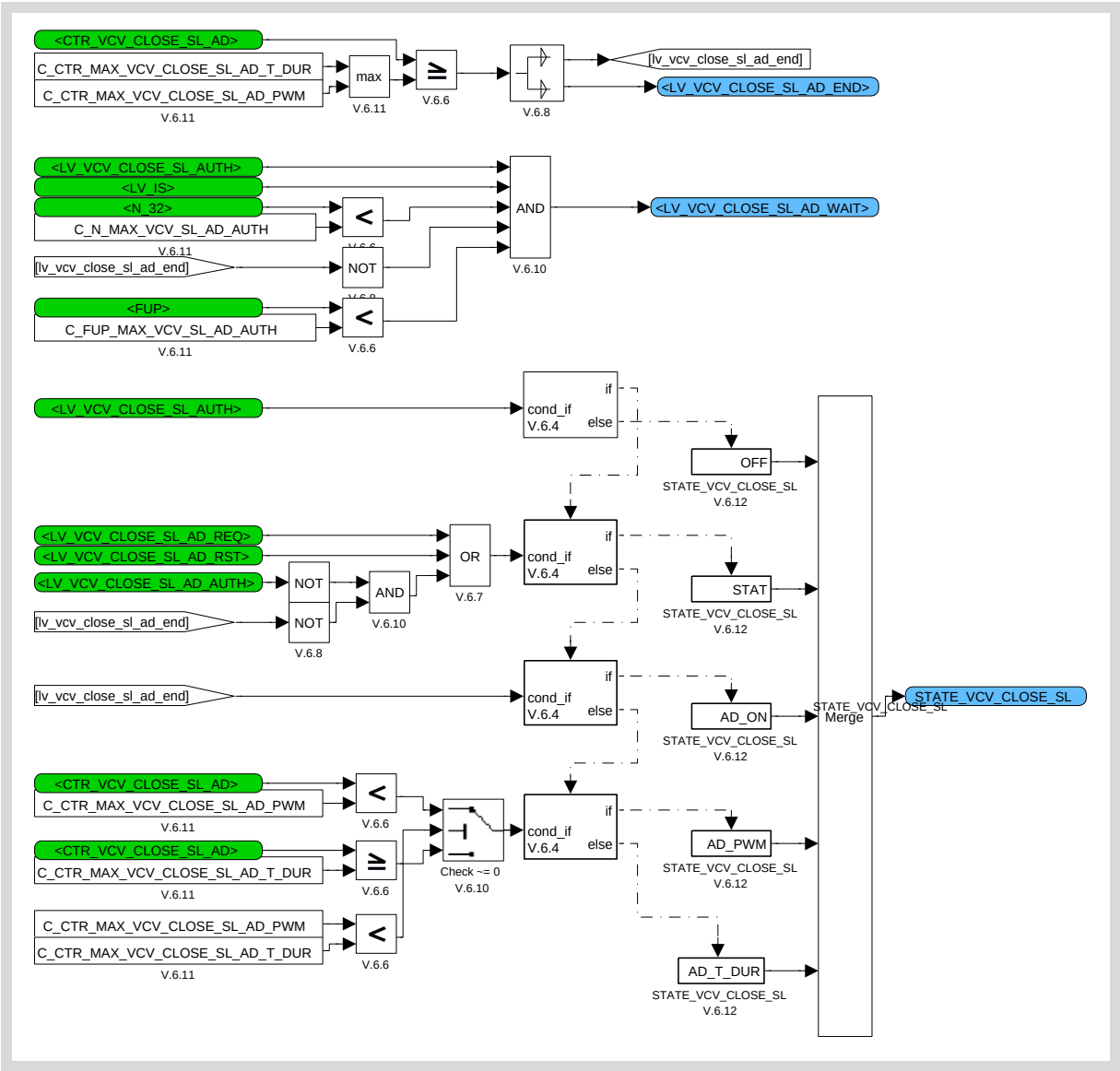

Figure 43.15.43:

43.15.2.1.2.2.3.1.1.1.3 Auxiliary variables for soft landing adaption during VCV closing

In auxiliary part, the essential parameters affecting VCV actuation are stored at beginning of adaptation and at end of adaptation.

If the current adaptation is completed, and there is an adaptation request, then the current PWM and T_DUR adaptation values are offset using the calibrated thresholds C_PWM_AD_OFS_VCV_CLOSE_SL_REQ and C_T_DUR_AD_OFS_VCV_CLOSE_SL_REQ respectively. This is done as it is assumed that as long as the shift of the working points affecting the adaptation are within the 'adaptation request' calibration range, then it is safe enough for the application of the (same) already learnt adaptation values through only correction of an offset. This is done to avoid un-necessary triggering of adaptation process.

However, a reset of adaptation, resets the adaptation values to zero. This implies that the working points have shifted to such an extent that a new adaptation learning process has to be triggered.

Copyright ©Continental AG. Transmittal, reproduction, dissemination and/or editing of this document as well as utilisation of its contents and communication thereof to others without expressed authorisation are prohibited. Offenders will be held liable for payment of damages. All rights created by patent grant or registration of a utility model or design patent are reserved.

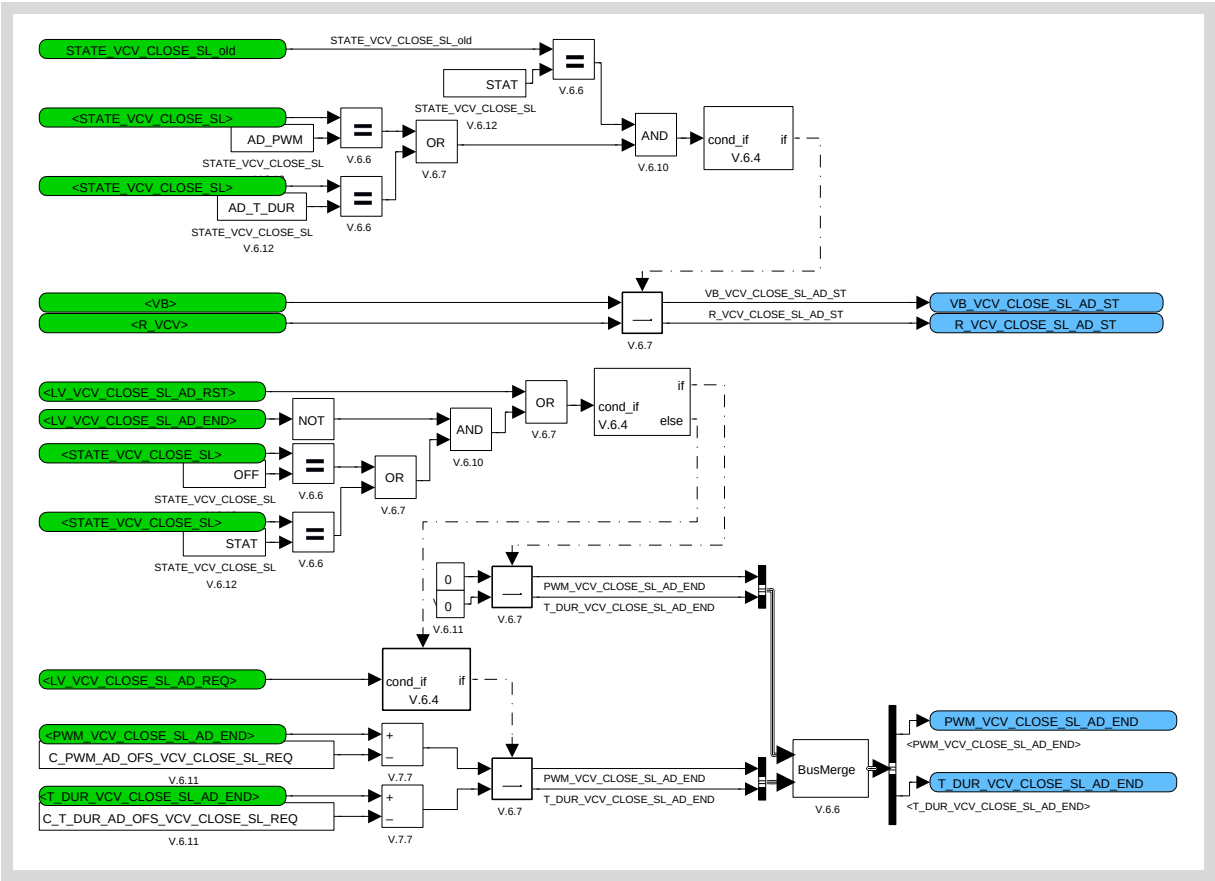

Figure 43.15.44:

43.15.2.1.2.2.3.1.1.2 Calculation of separate VCV soft landing states

In this subsystem, the calculations of separate VCV soft landing states are triggered based on the STATE_VCV_CLOSE_SL status.

Copyright ©Continental AG. Transmittal, reproduction, dissemination and/or editing of this document as well as utilisation of its contents and communication thereof to others without expressed authorisation are prohibited. Offenders will be held liable for payment of damages. All rights created by patent grant or registration of a utility model or design patent are reserved.

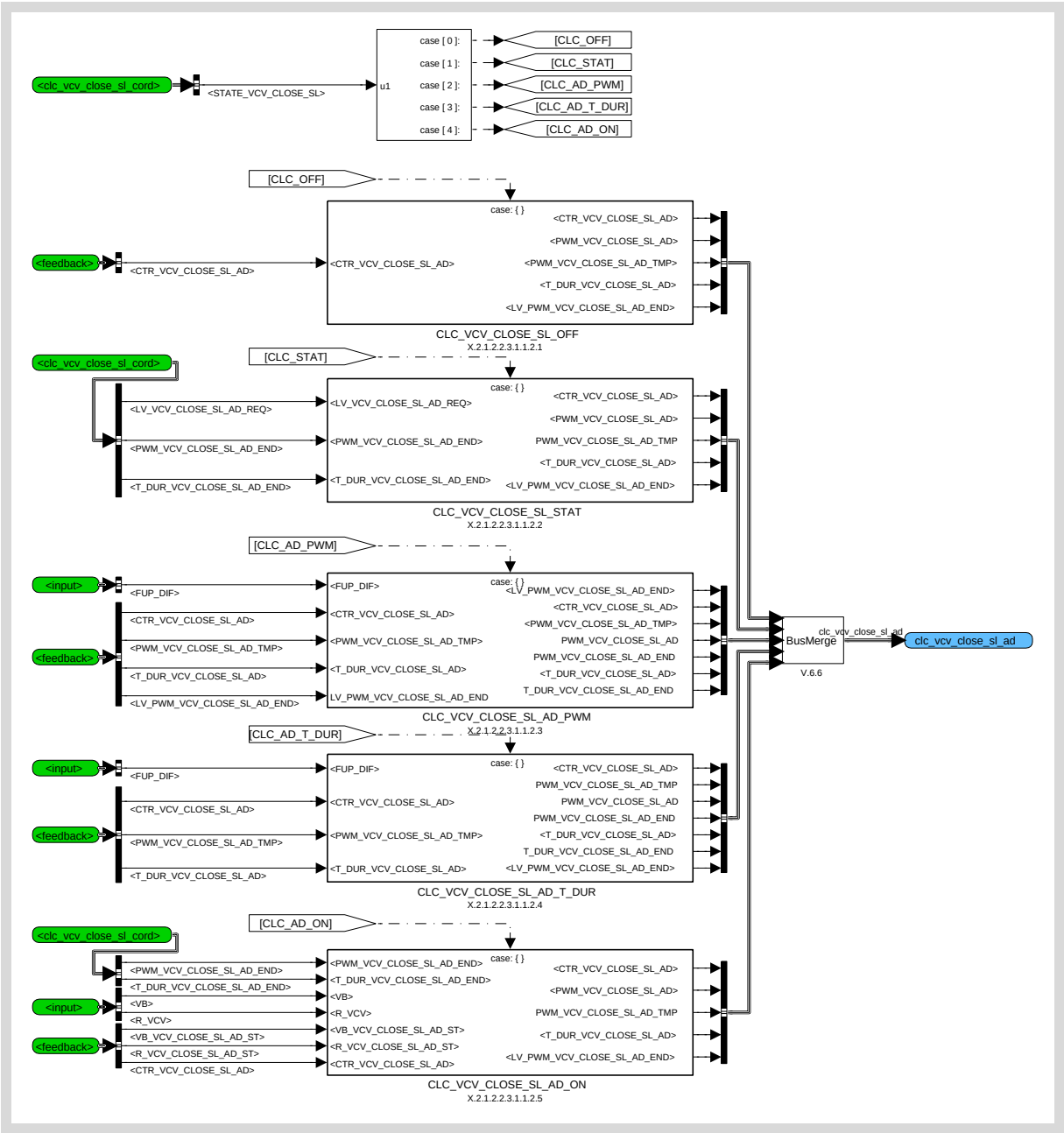

Figure 43.15.45:

43.15.2.1.2.2.3.1.1.2.1 Calculations during inactive soft landing during VCV closing

All adaptation values are reset when VCV closing SL is OFF. However, the adaptation counter has its old value stored in order to not loose the learning of adaptation which was already in progress from previous recurrences.

Copyright ©Continental AG. Transmittal, reproduction, dissemination and/or editing of this document as well as utilisation of its contents and communication thereof to others without expressed authorisation are prohibited. Offenders will be held liable for payment of damages. All rights created by patent grant or registration of a utility model or design patent are reserved.

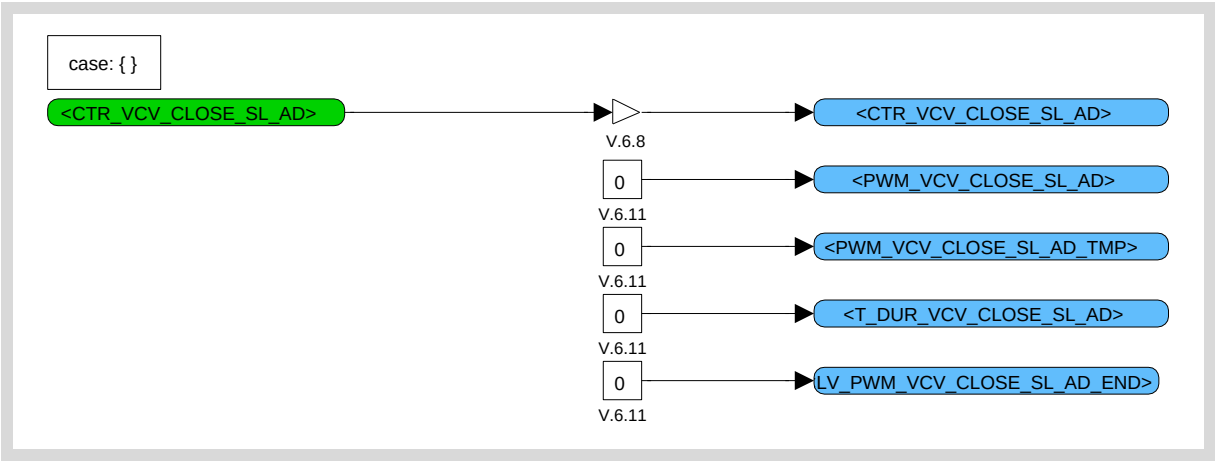

Figure 43.15.46:

43.15.2.1.2.2.3.1.1.2.2 Calculations during static mode, no adaptation active

All adaptation values are either reset when VCV closing SL state is at STAT and when there is no adaptation request. The adaptation values are set to the last stored adaptation value when an adaptation request active.

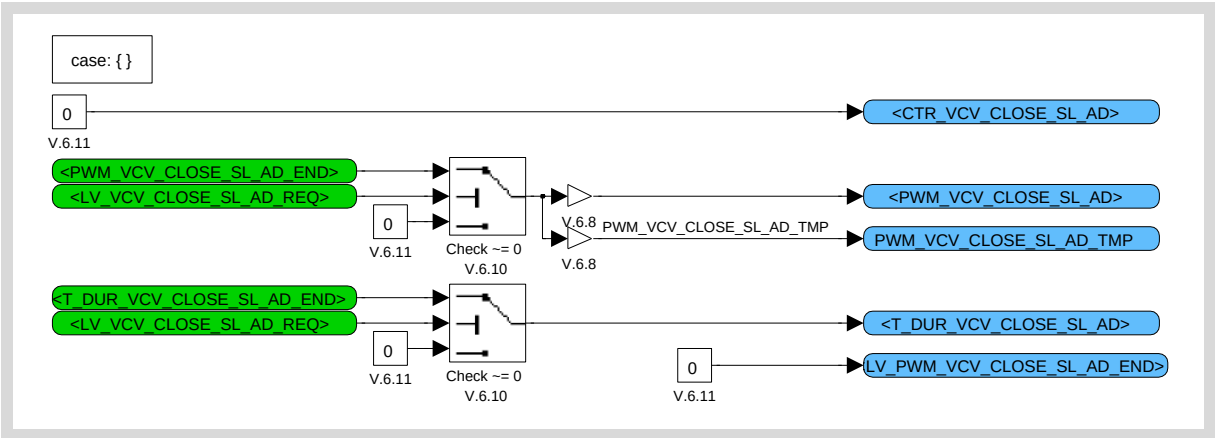

Figure 43.15.47:

43.15.2.1.2.2.3.1.1.2.3 Adaptation of duty-cycle for VCV holding phase

The duty cycle adaptation (AD_PWM) is done first since it decides the maximum current height that will be achieved upon completion of adaptation. The adaptation for holding phase is as follows,

1. At every recurrence, the PWM adaptation value is increased by a calibratable value (C_PWM_INC_VCV_CLOSE_SL_AD), until a particular pressure drop is breached in the rail when the fuel pressure difference increases beyond the calibrated threshold (C_FUP_DIF_VCV_CLOSE_SL_AD_PWM).

This indicates that with the current adaptation value, the VCV cannot close and due to this, the delivery has not happened and as a result we observe a pressure drop in the system.

2. On this breach, the last adapted value is decreased by a calibrated offset (C_PWM_OFS_VCV_CLOSE_SL_AD), in order to ensure that the application of this adapted value closes the VCV before delivery.

Copyright ©Continental AG. Transmittal, reproduction, dissemination and/or editing of this document as well as utilisation of its contents and communication thereof to others without expressed authorisation are prohibited. Offenders will be held liable for payment of damages. All rights created by patent grant or registration of a utility model or design patent are reserved.

3. Finally, the last adapted value (offset corrected) is applied for a few segments in order to ensure that the system can accomidate the current arrived adaptation value without opening the VCV and causing a fuel pressure drop again.

The switch to AD_T_DUR adaptation happens as soon as the SL adaptation counter increases beyond the calibrated threshold (C_CTR_MAX_VCV_CLOSE_SL_AD_PWM).

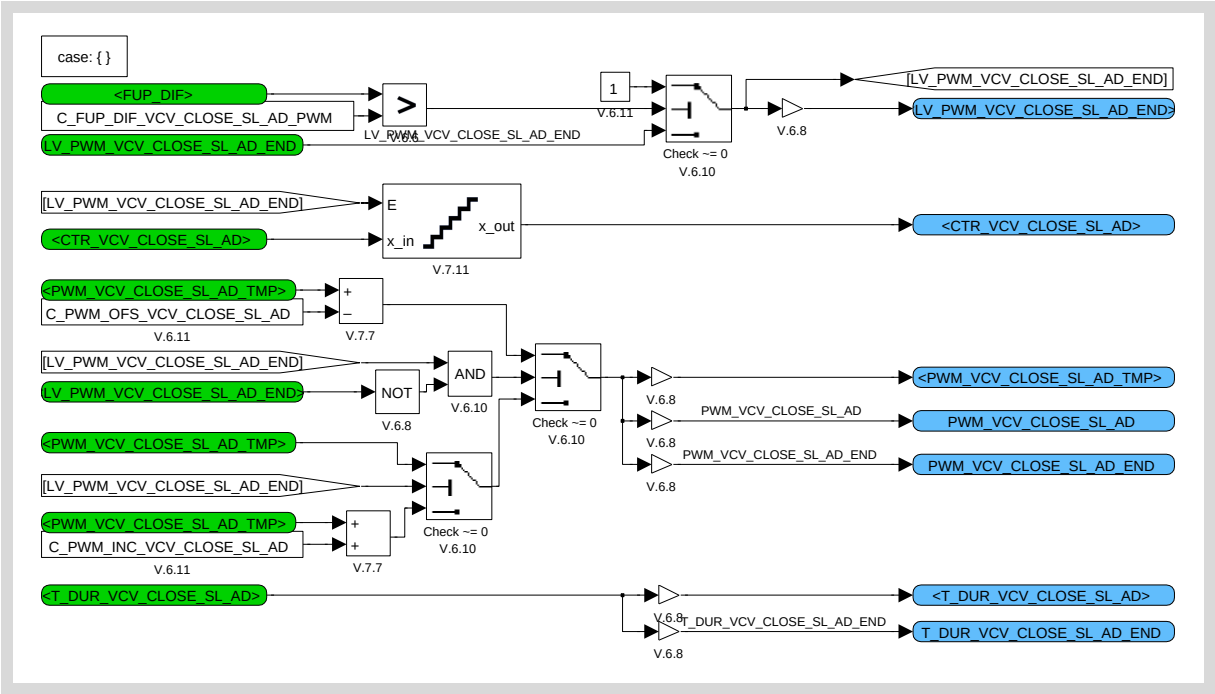

Figure 43.15.48:

43.15.2.1.2.2.3.1.1.2.4 Calculations of pull-in time for VCV peak phase

The duration adaptation (AD_T_DUR) is perfomed similar to the PWM adaptation. The adaptation for pull-in phase is as follows,

1. At every recurrence, the duration adaptation value is increased by a calibratable value (C_T_DUR_INC_VCV_CLOSE_SL_AD), until a particular pressure drop is breached in the rail when the fuel pressure difference increases beyond the calibrated threshold (C_FUP_DIF_VCV_CLOSE_SL_AD_T_DUR).

This indicates that with the current adaptation value, the VCV cannot close and due to this, the delivery has not happened and as a result we observe a pressure drop in the system.

2. On this breach, the SL counter is incremented and when it is equal to or increases beyond the calibrated threshold (C_CTR_MAX_VCV_CLOSE_SL_AD_T_DUR), the last adapted value is decreased by a calibrated offset (C_T_DUR_OFS_VCV_CLOSE_SL_AD), in order to ensure that the application of this adapted value closes the VCV before delivery.

Finally, the last adapted value (offset corrected) is used as the pull-in time adaptation.

It is important to note that the counter calibration value for pull-in time is always and should always be calibrated atleast one value above the counter calibration for PWM in order to ensure that the adaptation prcoess ends and the end of adaptation flag is raised (trigger for switching to AD_ON state) for application of the adaptated values in the next VCV actuation cycle.

Copyright ©Continental AG. Transmittal, reproduction, dissemination and/or editing of this document as well as utilisation of its contents and communication thereof to others without expressed authorisation are prohibited. Offenders will be held liable for payment of damages. All rights created by patent grant or registration of a utility model or design patent are reserved.

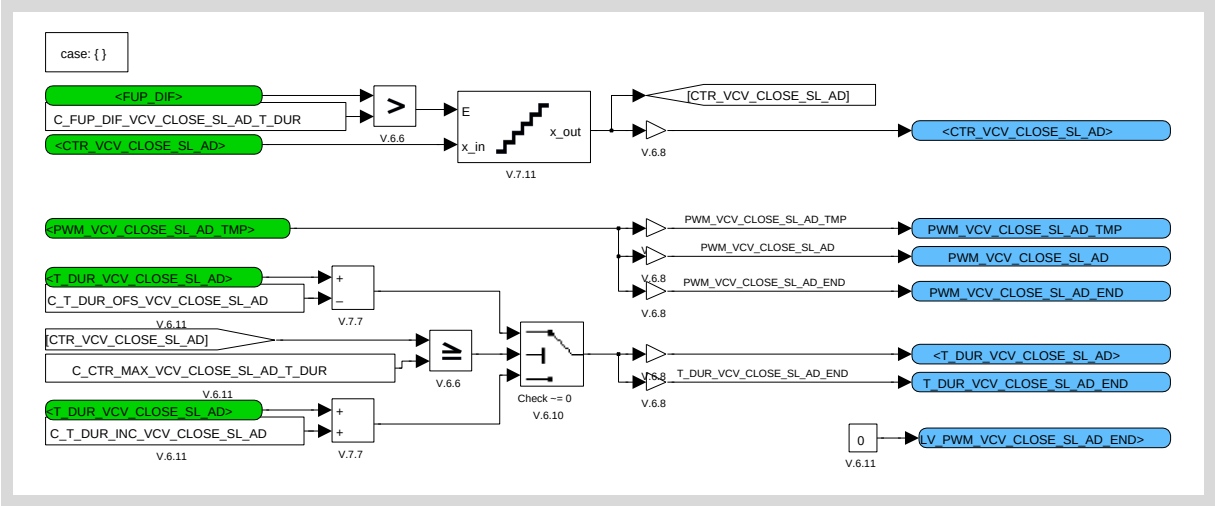

Figure 43.15.49:

43.15.2.1.2.2.3.1.1.2.5 Calculations for adapted soft landing during VCV closing

After the end of adaptation the adaptation variables are corrected depending on the deviation of environmental conditions (working points) between their current values and their values at start of adaptation.

We know that the working points are stored at start of adaptation as R_VCV_CLOSE_SL_AD_ST and VB_VCV_CLOSE_SL_AD_ST. In order to consider the effect of dynamic deviation of the working points during the process of adaptation, the final adaptation values (learnt from AD_PWM and AD_T_DUR states) are corrected based on the current working point values (R_VCV and VB) through the below calibrations.

IP_PWM_VCV_CTL_SL_AD_END – PWM adaptation correction based on working point status
IP_T_DUR_VCV_CTL_SL_AD_END – T_DUR adaptation correction based on working point status

The calibration values of the above IP's are based on the reference VCV values.

Copyright ©Continental AG. Transmittal, reproduction, dissemination and/or editing of this document as well as utilisation of its contents and communication thereof to others without expressed authorisation are prohibited. Offenders will be held liable for payment of damages. All rights created by patent grant or registration of a utility model or design patent are reserved.

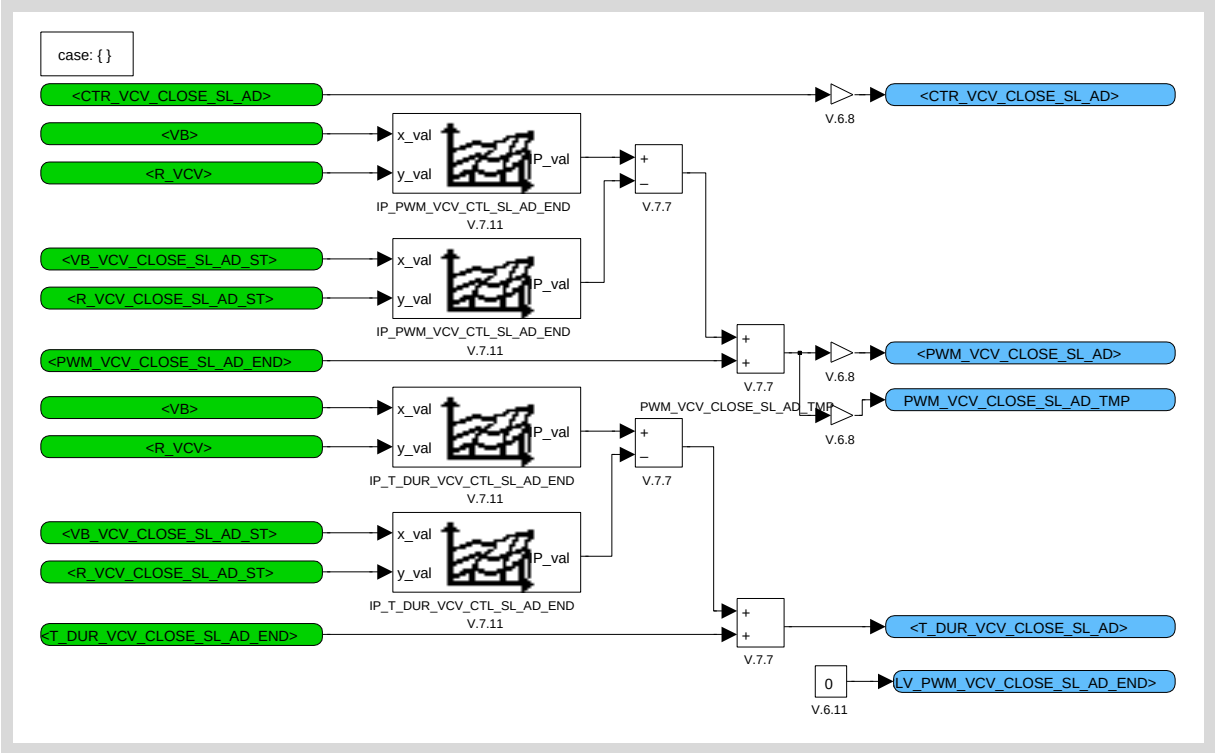

Figure 43.15.50:

Copyright ©Continental AG. Transmittal, reproduction, dissemination and/or editing of this document as well as utilisation of its contents and communication thereof to others without expressed authorisation are prohibited. Offenders will be held liable for payment of damages. All rights created by patent grant or registration of a utility model or design patent are reserved.

43.15.2.1.2.2.3.1.2 Closed loop controlled actuation of VCV

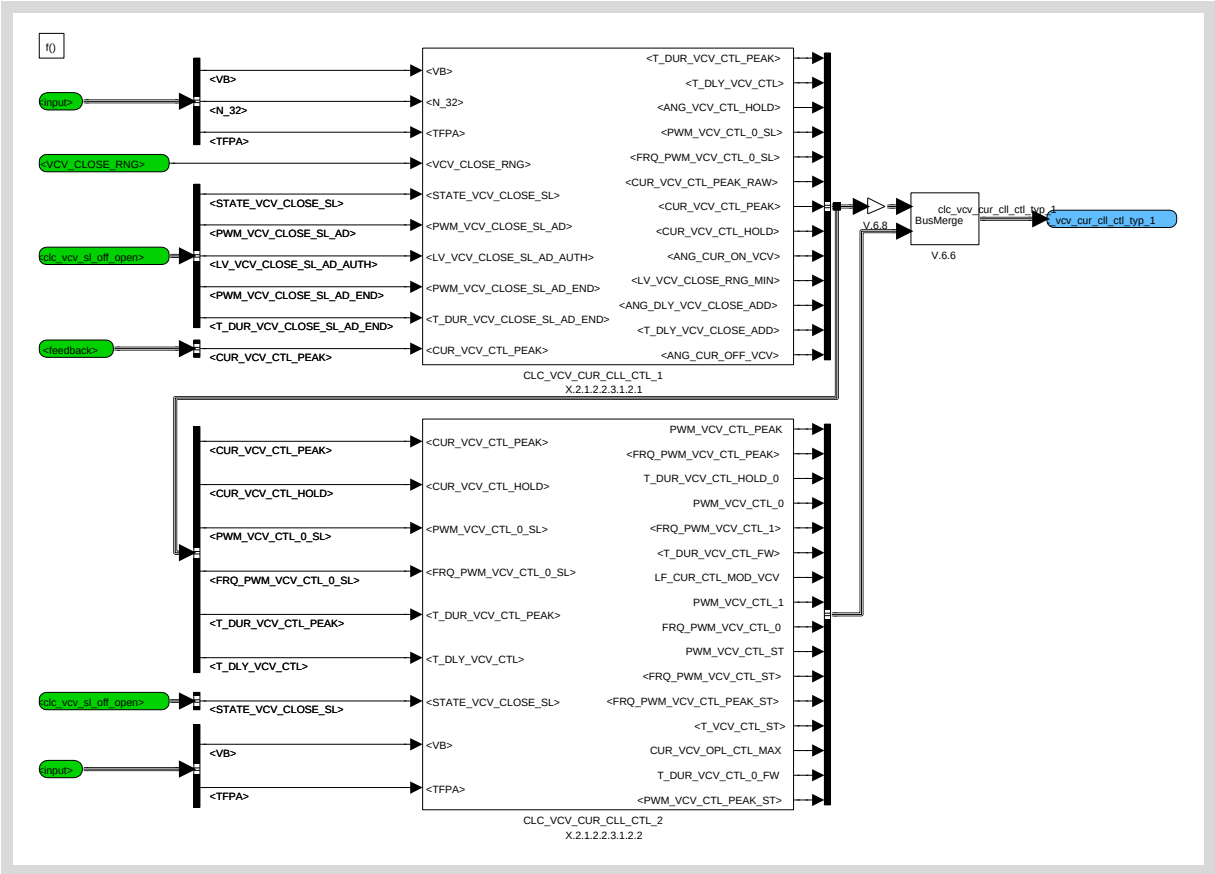

Figure 43.15.51:

Copyright ©Continental AG. Transmittal, reproduction, dissemination and/or editing of this document as well as utilisation of its contents and communication thereof to others without expressed authorisation are prohibited. Offenders will be held liable for payment of damages. All rights created by patent grant or registration of a utility model or design patent are reserved.

43.15.2.1.2.2.3.1.2.1 Closed loop controlled actuation of VCV (Part 1)

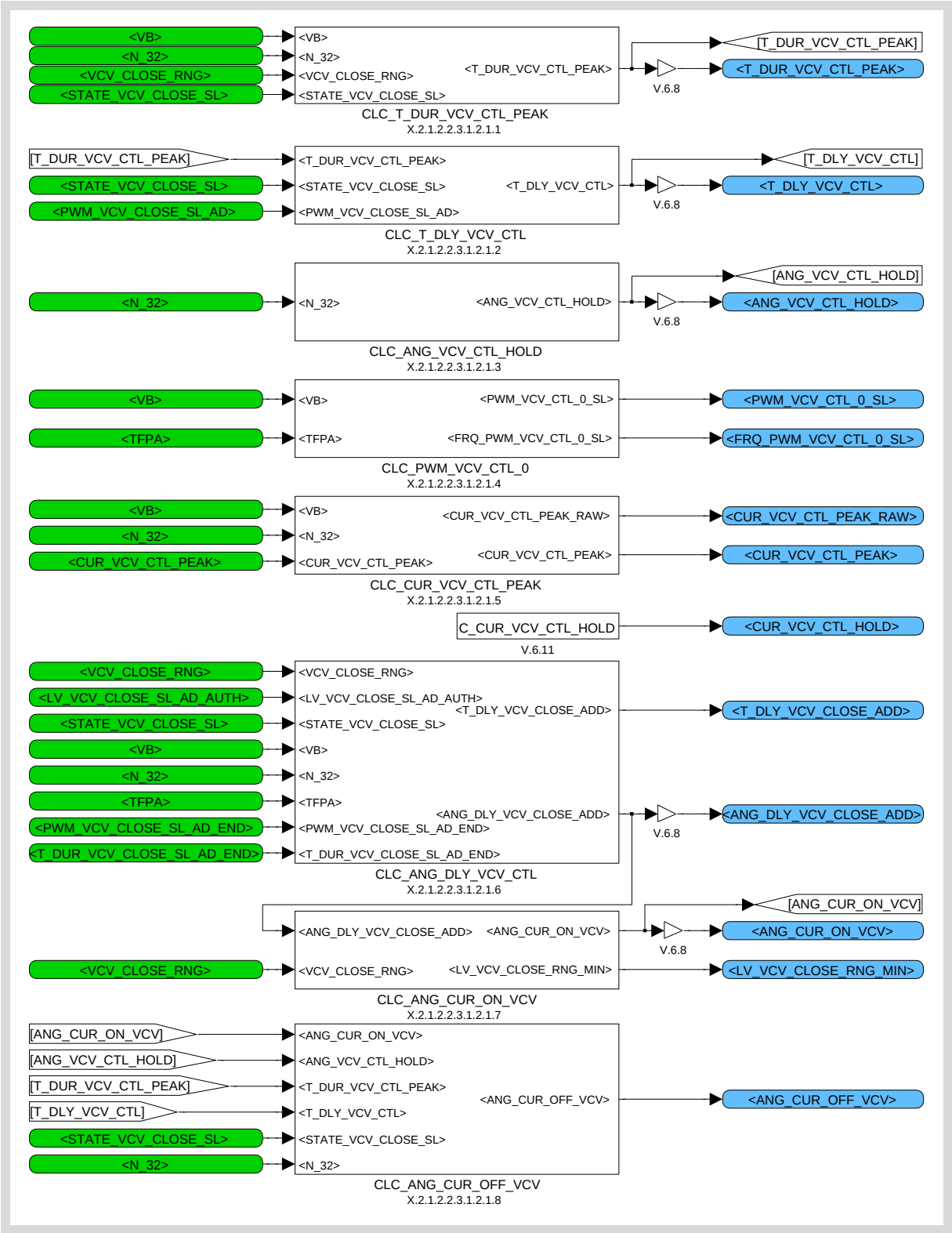

Figure 43.15.52:

Copyright ©Continental AG. Transmittal, reproduction, dissemination and/or editing of this document as well as utilisation of its contents and communication thereof to others without expressed authorisation are prohibited. Offenders will be held liable for payment of damages. All rights created by patent grant or registration of a utility model or design patent are reserved.

43.15.2.1.2.2.3.1.2.1.1 Duration for pull-in phase during VCV closing

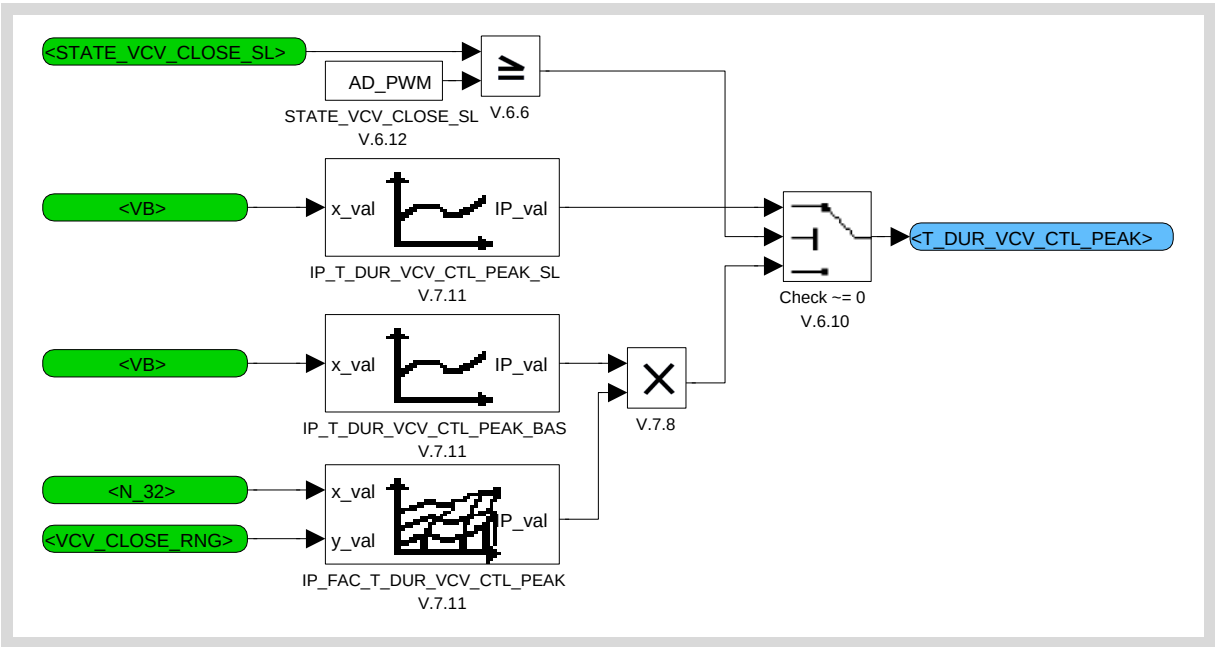

Figure 43.15.53:

43.15.2.1.2.2.3.1.2.1.2 Delay time during soft closing of VCV

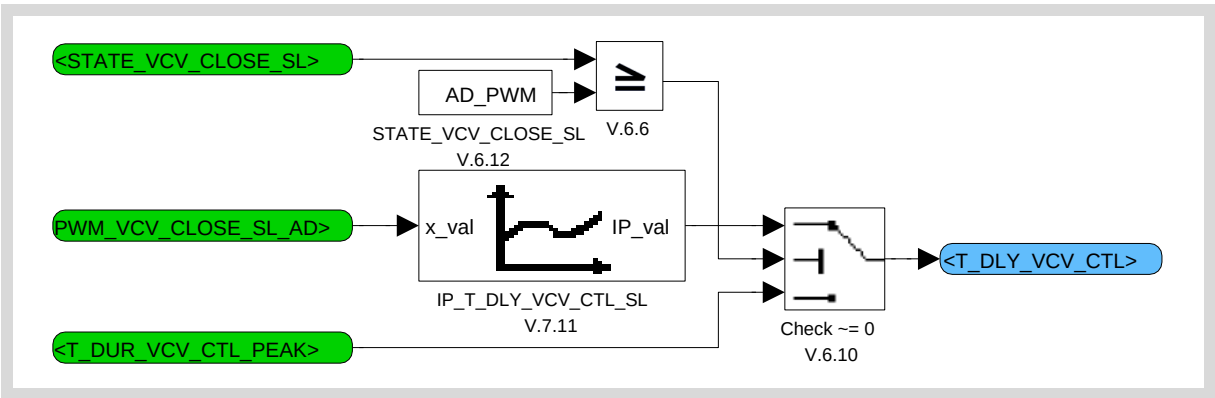

Figure 43.15.54:

Copyright ©Continental AG. Transmittal, reproduction, dissemination and/or editing of this document as well as utilisation of its contents and communication thereof to others without expressed authorisation are prohibited. Offenders will be held liable for payment of damages. All rights created by patent grant or registration of a utility model or design patent are reserved.

43.15.2.1.2.2.3.1.2.1.3 VCV holding angle

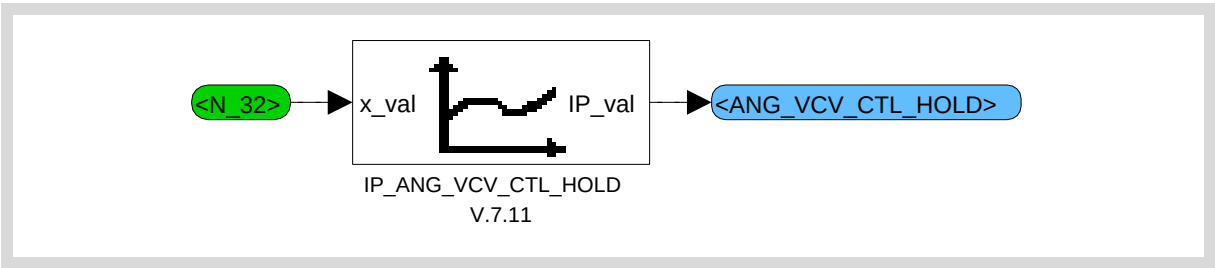

Figure 43.15.55:

43.15.2.1.2.2.3.1.2.1.4 Duty cycle for VCV actuation during VCV pick-up phase and soft closing

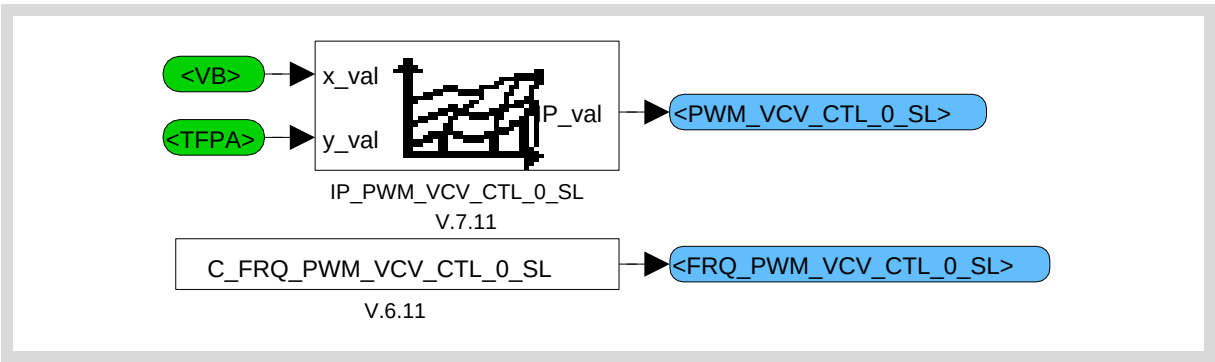

Figure 43.15.56:

43.15.2.1.2.2.3.1.2.1.5 Set point for VCV current closed loop control during peak phase

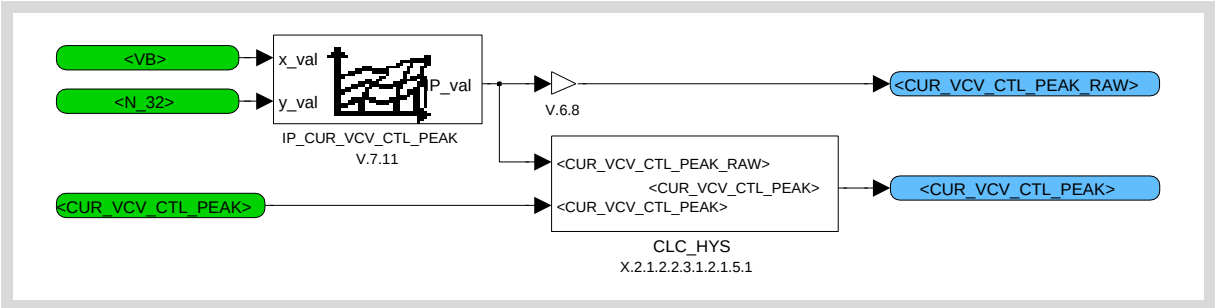

Figure 43.15.57:

Copyright ©Continental AG. Transmittal, reproduction, dissemination and/or editing of this document as well as utilisation of its contents and communication thereof to others without expressed authorisation are prohibited. Offenders will be held liable for payment of damages. All rights created by patent grant or registration of a utility model or design patent are reserved.

43.15.2.1.2.2.3.1.2.1.5.1 Hysteresis for current set point during peak phase

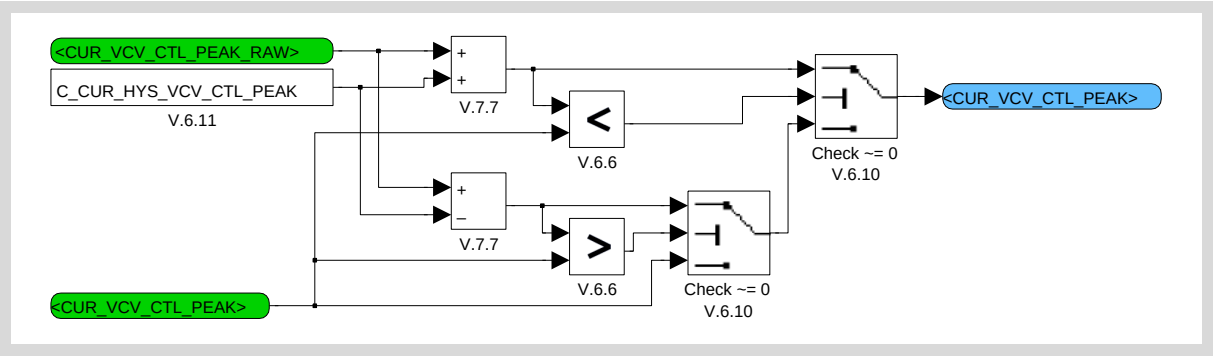

Figure 43.15.58:

43.15.2.1.2.2.3.1.2.1.6 Calculation of mechanical delay time and angle between VCV current feed and VCV closing

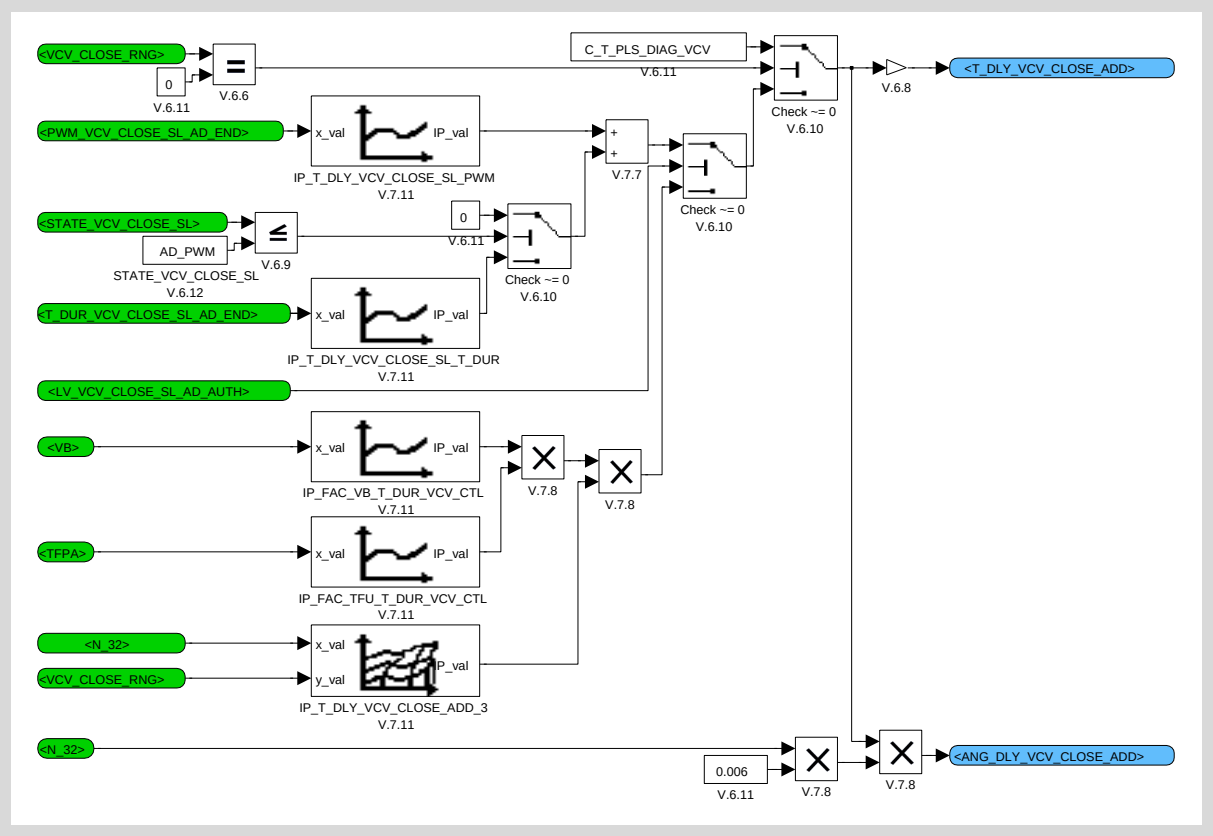

Figure 43.15.59:

Copyright ©Continental AG. Transmittal, reproduction, dissemination and/or editing of this document as well as utilisation of its contents and communication thereof to others without expressed authorisation are prohibited. Offenders will be held liable for payment of damages. All rights created by patent grant or registration of a utility model or design patent are reserved.

43.15.2.1.2.2.3.1.2.1.7 Angle to begin current feed of the VCV

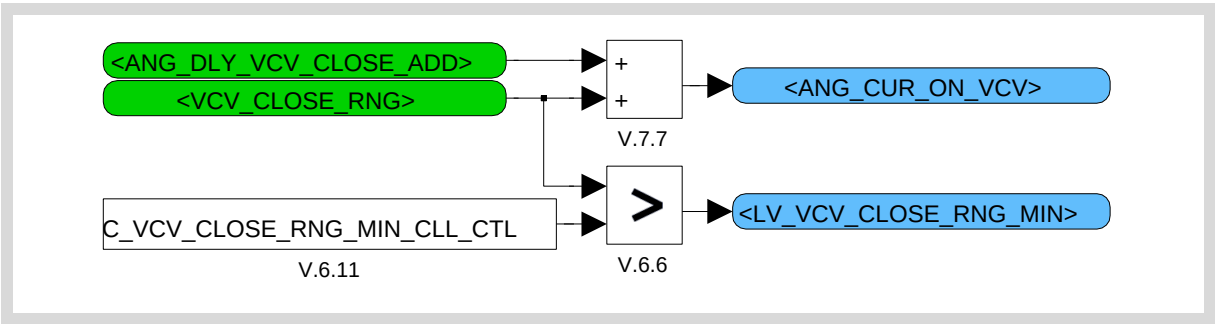

Figure 43.15.60:

43.15.2.1.2.2.3.1.2.1.8 Angle to end current feed of the VCV

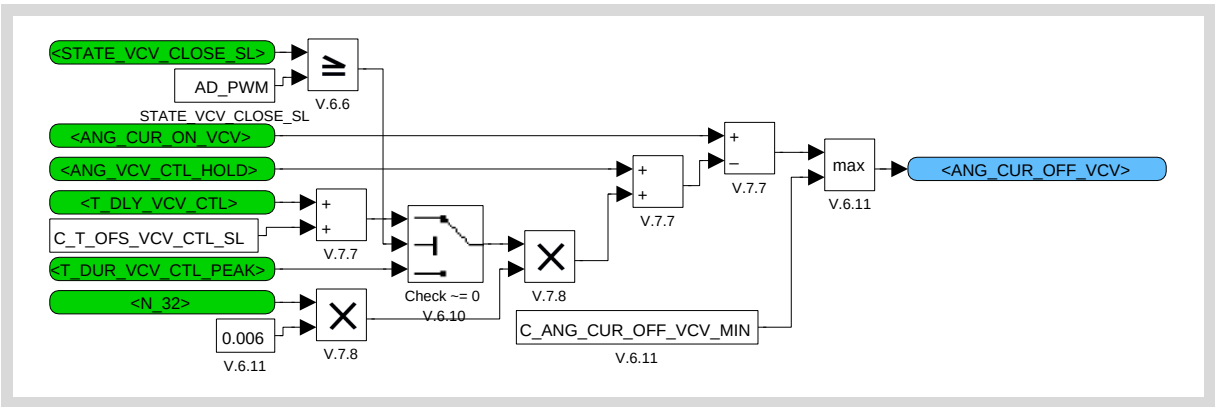

Figure 43.15.61:

Copyright ©Continental AG. Transmittal, reproduction, dissemination and/or editing of this document as well as utilisation of its contents and communication thereof to others without expressed authorisation are prohibited. Offenders will be held liable for payment of damages. All rights created by patent grant or registration of a utility model or design patent are reserved.

43.15.2.1.2.2.3.1.2.2 Closed loop controlled actuation of VCV (Part 2)

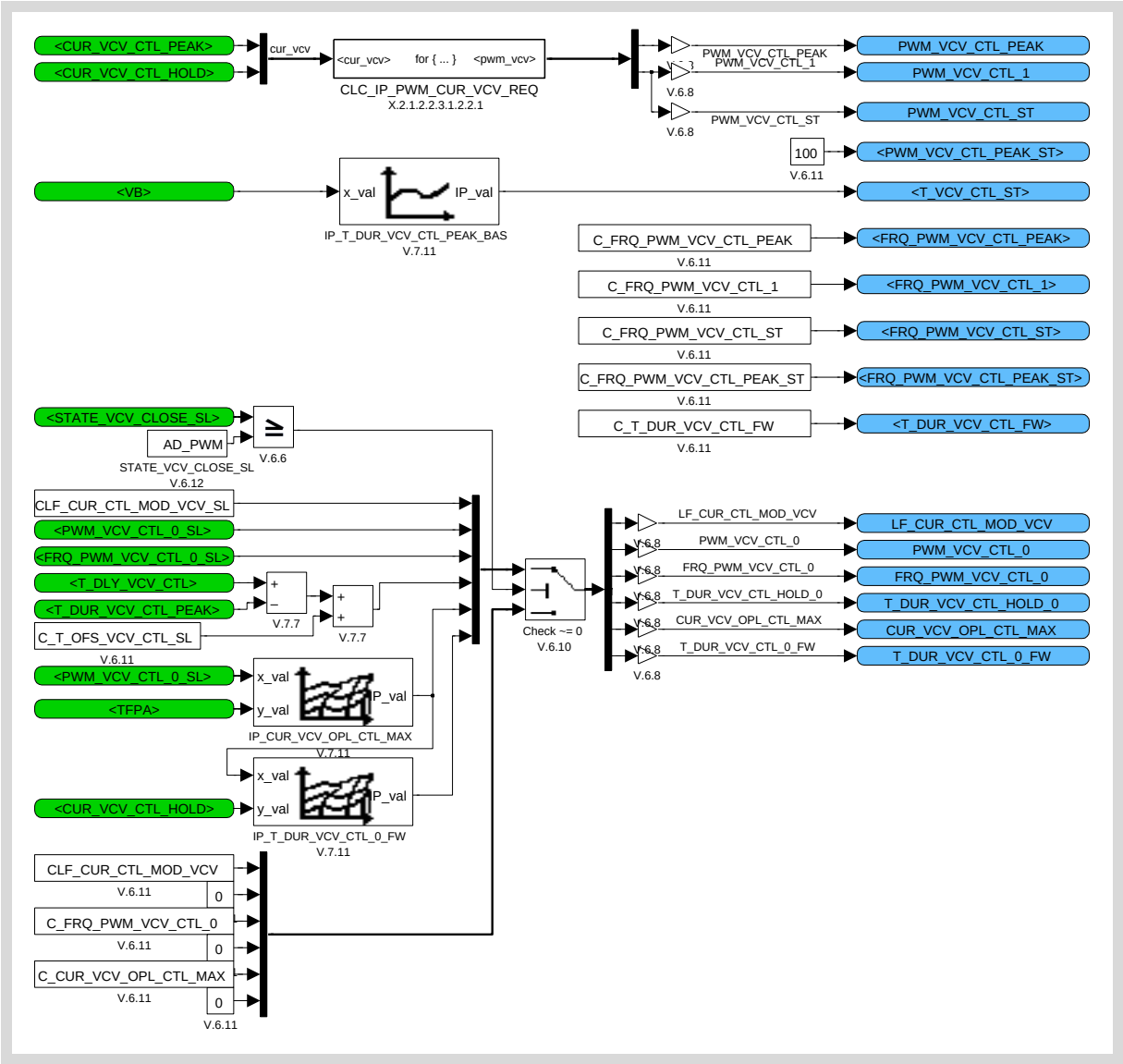

Figure 43.15.62:

43.15.2.1.2.2.3.1.2.2.1 Calculation of phase specific current set points of VCV control pulse

For each VCV control pulse phase a current set point is transferred into its respective duty-cycle.

Copyright ©Continental AG. Transmittal, reproduction, dissemination and/or editing of this document as well as utilisation of its contents and communication thereof to others without expressed authorisation are prohibited. Offenders will be held liable for payment of damages. All rights created by patent grant or registration of a utility model or design patent are reserved.

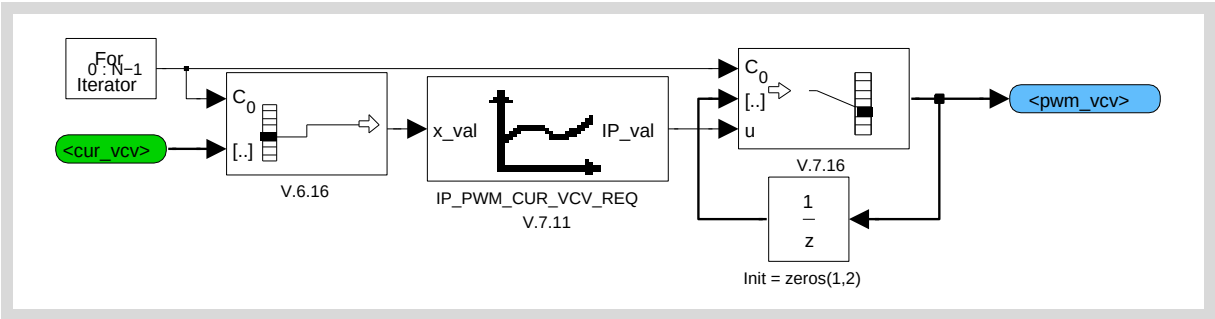

Figure 43.15.63:

43.15.2.1.2.2.3.1.3 Calculation of VCV current control parameters for currentless open VCVs

Calculation of VCV current control parameters are split into the pump (manufacturer) type. This is calibrated through the switch LC_SWI_VCV_TYP. The value of the switch w.r.t. the pump type is give below,

1. Bosch HDP5 pump
2. Hitachi pump

However, the duty cycle calculation for the pumps is the same and is given in the subsystem CLC_PWM_VCV_CTL.

Copyright ©Continental AG. Transmittal, reproduction, dissemination and/or editing of this document as well as utilisation of its contents and communication thereof to others without expressed authorisation are prohibited. Offenders will be held liable for payment of damages. All rights created by patent grant or registration of a utility model or design patent are reserved.

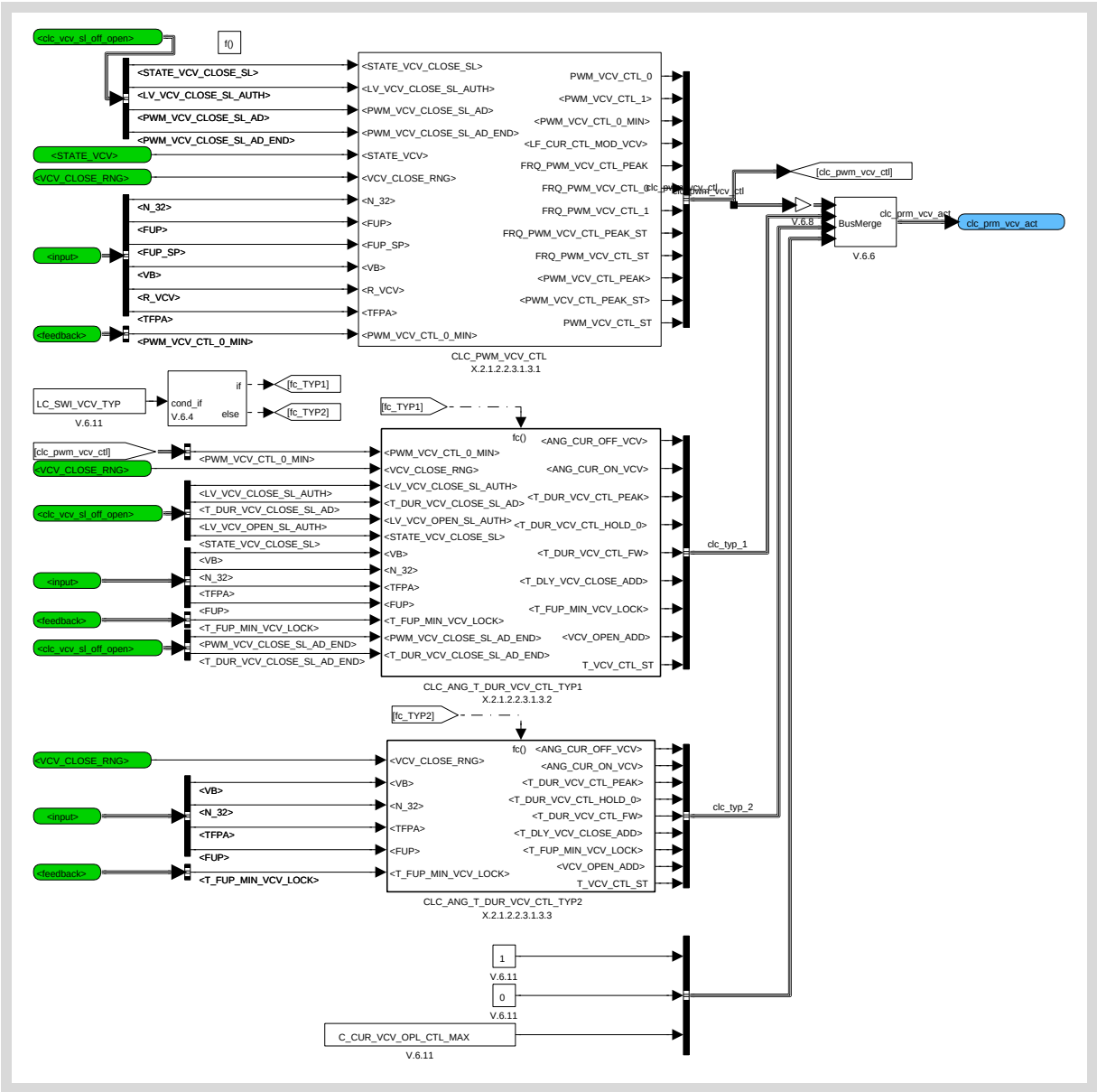

Figure 43.15.64:

43.15.2.1.2.2.3.1.3.1 Calculation of duty-cycle for VCV holding phase

The duty cycle calculation for VCV holding phase for SL and normal operation is done in this section.

The hold phase duty cycle value (PWM_VCV_CTL_1) to be applied during non-SL or normal operating state is given through PWM_VCV_CTL_0. But, PWM_VCV_CTL_0 corresponds to the pick-up phase during SL mode where it is individually calculated in the subsystem CLC_PWM_VCV_CTL_2_OPM.
PWM_VCV_CTL_0 is set to zero in VCV_OPEN and MFP_START phases of the VCV.

During MFP_START phase, a long continuous pulse is applied to the VCV in order to have a continuous delivery of fuel through the pump to enable a fast pressure build up in the rail. The calibration IP_PWM_VCV_CTL_

Copyright ©Continental AG. Transmittal, reproduction, dissemination and/or editing of this document as well as utilisation of its contents and communication thereof to others without expressed authorisation are prohibited. Offenders will be held liable for payment of damages. All rights created by patent grant or registration of a utility model or design patent are reserved.

PULSE_ST is used to apply this long continuous duty cycle depending on battery voltage. This long continuous pulse is also output through PWM_VCV_CTL_0, but only during start phase.

When the VCV SL adaptation phase is still in either STAT, AD_PWM or AD_T_DUR phase, then a basic value of the duty cycle is applied through the calibration IP_PWM_VCV_CTL_2_BAS for the hold phase.

After the adaptation is completed (AD_ON), then the adapted value is corrected by a factor due to the effect of dynamic change of adaptation working points, i.e. battery voltage and the VCV resistance. This factor is realized through the calibration IP_FAC_COR_PWM_VCV_CTL_1. Finally, this factored adapted value is applied for the PWM_VCV_CTL_1 calculation.

In case there is a wrong learning of the adaptation, then in order to have a minimum safety adaptation value active all the time, a calibration constant is used, C_PWM_MAX_COR_VCV_CTL_1.

Copyright ©Continental AG. Transmittal, reproduction, dissemination and/or editing of this document as well as utilisation of its contents and communication thereof to others without expressed authorisation are prohibited. Offenders will be held liable for payment of damages. All rights created by patent grant or registration of a utility model or design patent are reserved.

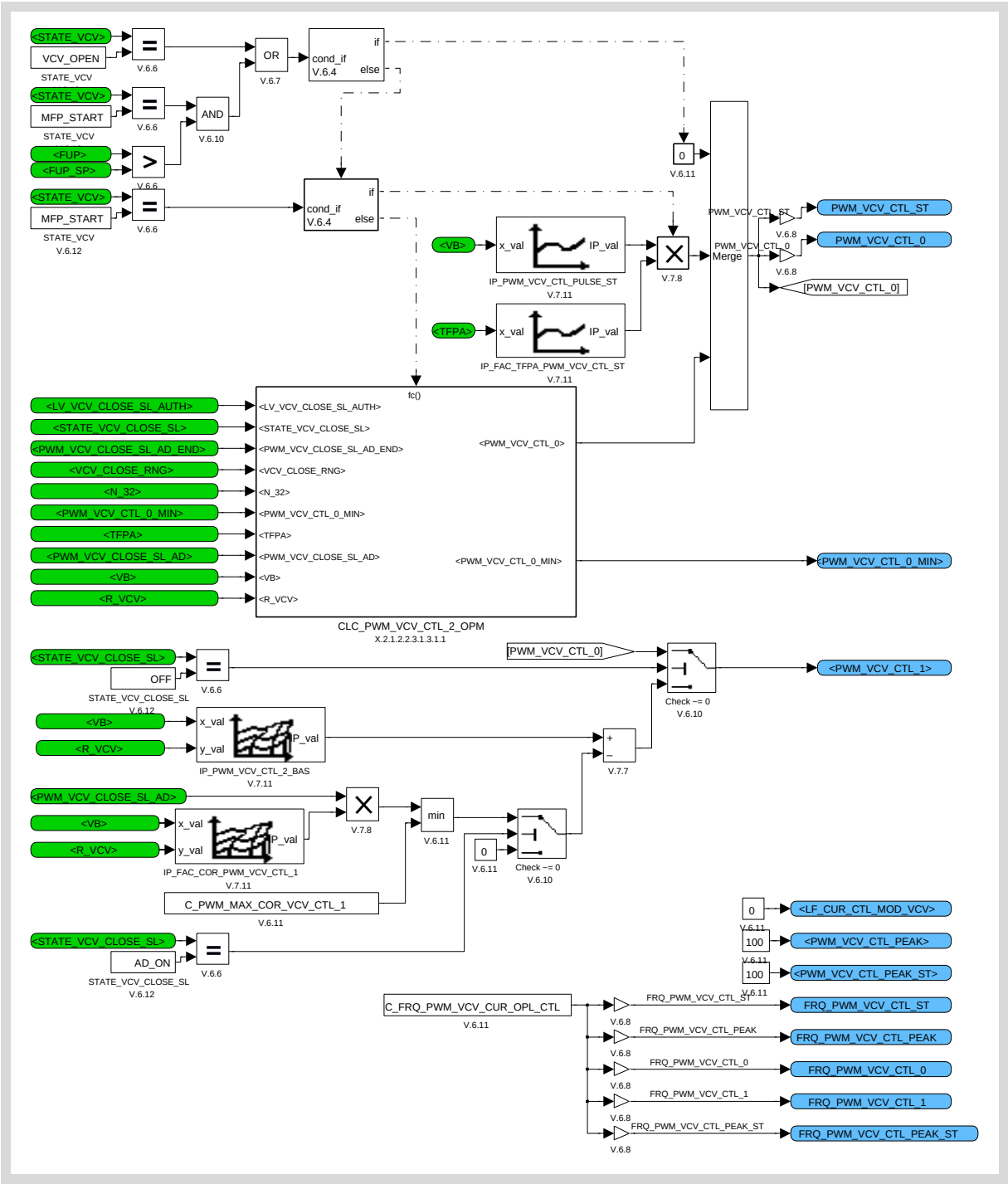

Figure 43.15.65:

43.15.2.1.2.2.3.1.3.1.1 Duty cycle for VCV holding phase during normal states

The duty cycle calculation for the VCV holding phase can be split based on whether SL is active or not. When SL is not active, then the duty cycle calculation for hold phase is calibrated based on the reference VCV, the details are given below,

Copyright ©Continental AG. Transmittal, reproduction, dissemination and/or editing of this document as well as utilisation of its contents and communication thereof to others without expressed authorisation are prohibited. Offenders will be held liable for payment of damages. All rights created by patent grant or registration of a utility model or design patent are reserved.

IP_PWM_VCV_CTL_PULSE – This is the basic map giving the PWM value dependent on battery voltage and engine speed.

IP_FAC_CLOSE_RNG_PWM_VCV_CTL – This is the map giving the factor affecting the PWM value due to the affect of engine speed on the VCV closing angle. Since, we know that the duration for the duty cycle gets affected by the engine speed, i.e. higher engine speed results in less duration of duty cycles application, since the pump action is also faster.

IP_FAC_TFPA_PWM_VCV_CTL – This is the map giving the factor affecting the PWM value due to the VCV coil temperature dependency.

The below explanation gives the steps of duty cycle calculation during SL,

1. During STAT mode or AD_PWM mode, the basic reference VCV PWM values are taken from the calibration depending on battery voltage and VCV resistance, IP_PWM_VCV_CTL_PULSE_SL. But, since during the process of PWM adaptation, then adaptation value is increased at every recurrence, so, consequently the PWM duty cycle value has to be decreased by subtracting the current adaptation value from the PWM value considered from the map.
2. During AD_T_DUR mode or AD_ON mode, the already calculated PWM value during AD_PWM mode as explained in step 1 above (PWM_VCV_CTL_O_MIN) is used as input to the calibration IP_PWM_VCV_CTL_PULSE_SL_AD. This is an additional basic reference VCV calibration based on the PWM value learnt in the AD_PWM mode. This addition to the already calculated value in AD_PWM mode is done in order to avoid a loss in the total current height when the T_DUR adaptation is under progress.
3. During AD_ON mode, in addition to the calibration IP_PWM_VCV_CTL_PULSE_SL_AD value, the influence of the movement of the working points during active SL application is considered. This is done through the addition of,
(a). the difference of the PWM adaptation value at the current working point from the PWM adaptation value of the VCV learnt at the start of adaptation.
(b). the calibratable offset value, C_PWM_OFS_VCV_CTL_PULSE_SL_AD. This offset is meant as a safety limit in order to cover any insufficient working point influence left out from point (a) above.

Copyright ©Continental AG. Transmittal, reproduction, dissemination and/or editing of this document as well as utilisation of its contents and communication thereof to others without expressed authorisation are prohibited. Offenders will be held liable for payment of damages. All rights created by patent grant or registration of a utility model or design patent are reserved.

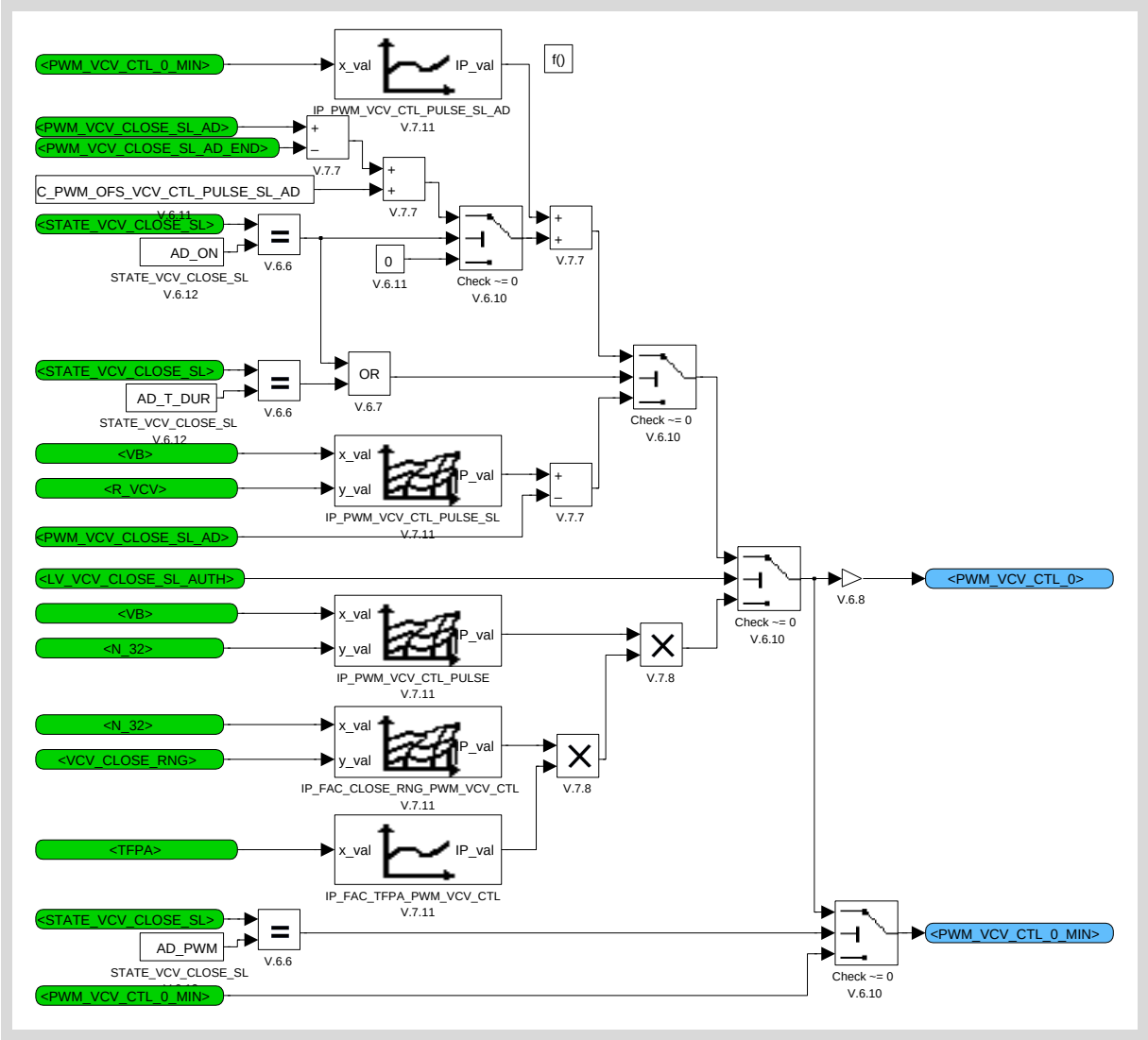

Figure 43.15.66:

43.15.2.1.2.2.3.1.3.2 Control angles and times for VCV actuation for type 1 VCV

This section consists of the control angle and time duration calculations for Bosch type VCV's. Figure 56 shows the control angles and time durations during normal operation and Figure 57 shows the control angles and time durations during SL operation.

VCV_OPEN_ADD calculation :
The VCV_OPEN_ADD represents the total hold phase time of the actuation cycle.
During normal operation, it is calculated through the following calibrations,

IP_VCV_OPEN_ADD – This is the basic reference VCV value for hold time in terms of crank angle. It depends on the battery voltage and engine speed.
IP_FAC_CLOSE_RNG_VCV_OPEN_ADD – This is the correction factor for the hold time based on the engine speed and the angle at which the VCV should close. Higher the engine speed, less hold time available that can be applied to the VCV and vice-versa.

Copyright ©Continental AG. Transmittal, reproduction, dissemination and/or editing of this document as well as utilisation of its contents and communication thereof to others without expressed authorisation are prohibited. Offenders will be held liable for payment of damages. All rights created by patent grant or registration of a utility model or design patent are reserved.

IP_FAC_TFPA_VCV_OPEN_ADD – This is the correction factor for the hold time based on the VCV coil temperature. Higher the coil temperature, higher the hold duration required and vice – versa.
T_FUP_MIN_VCV_LOCK calculation :
In case the pressure developed inside the pump is lesser than a calibrated threshold C_FUP_MIN_LOCK_VCV (usually around 20 bar), then the hydraulic pressure developed inside the pump chamber is not sufficient in aiding the closure of the VCV during the delivery stroke. So, in order to close the VCV during such situations, a timer is used to hold the current of VCV for extended times and at an angle close to the TDC of the pump. This allows the VCV to be closed through the current given to it, regardless of the low pressure in the pump chamber. But, this extended current duration is also limited through a calibration C_T_MAX_FUP_MIN in order to prevent the VCV from over heating.

T_DUR_VCV_CTL_FW calculation :
The free wheel time is calibrated through a constant, C_T_DUR_VCV_CTL_FW. This value is used in both normal operation and during VCV closing SL operation. Free wheeling is deactive for VCV close SL when VCV open SL is also active, in such cases, the free wheel time is set to zero.

ANG_CUR_OFF_VCV calculation :
The ANG_CUR_OFF_VCV represents the crank angle at which the current is switched off to the VCV coil.
This angle is referenced till the TDC of the pump is achieved. ANG_CUR_OFF_VCV is the duration in terms of crank angle from the end of hold phase to the pump TDC.
When minimum delivery is requested through VCV_CLOSE_RNG, then the ANG_CUR_OFF_VCV is set to zero.
As long as low pressure delivery (lv_fup_min_lock) is active, then the extended current is ensured by giving the minimum angle to the VCV through the calibration C_ANG_CUR_OFF_VCV_MIN.
When the low pressure delivery is inactive, then the ANG_COR_OFF_VCV is calculated through VCV_CLOSE_RNG and VCV_OPEN_ADD.
When the VCV opening SL is active, then the ANG_CUR_OFF_VCV is calculated through a calibration dependant on fuel pressure, IP_ANG_CUR_OFF_VCV_OPEN_SL.

An additional closing angle (ang_dly_ofs) calculation is done during SL operation. This additional angle is essentially helpful when the VCV closing SL adaptation (AD_PWM or AD_T_DUR) is active, since the actual closing of the VCV gets affected due to the changing adaptation values, threrefore to be safe that the VCV closes surely, this additional closing angle is beneficial and also, its useful in preventing debouncing effects of VCV while closing when SL is active.

T_DLY_VCV_CLOSE_ADD calculation :
The T_DLY_VCV_CLOSE_ADD represents the total peak (or pull-in) time of the VCV actuation cycle.
Under normal operation, the VCV closes at end of T_DLY_VCV_CLOSE_ADD.

During normal operation, it is calculated through the following calibrations,
IP_T_DLY_VCV_CLOSE_ADD_3 – This is the basic reference VCV value for peak time. It depends on the VCV closing angle and engine speed.
IP_FAC_VB_T_DUR_VCV_CTL – This is the correction factor for the peak time based on battery voltage. Lower the battery voltage, higher is the peak time application to achieve the required current height.
IP_FAC_TFU_T_DUR_VCV_CTL – This is the correction factor for the peak time based on the VCV coil temperature. Higher the coil temperature, higher the peak duration required and vice – versa.

When minimum delivery is requested through VCV_CLOSE_RNG, then the peak time is set to a default minimum value through the calibration C_T_PLS_DIAG_VCV. This is done so that the power stage diagnosis of the VCV can be done even in case of minimum delivery.

During SL operation, it is calculated as explained below,
When the VCV closing SL state is either in STAT mode or in AD_PWM mode, then T_DLY_VCV_CLOSE_ADD is calculated through the calibration IP_T_DLY_VCV_CLOSE_SL_PWM.

Copyright ©Continental AG. Transmittal, reproduction, dissemination and/or editing of this document as well as utilisation of its contents and communication thereof to others without expressed authorisation are prohibited. Offenders will be held liable for payment of damages. All rights created by patent grant or registration of a utility model or design patent are reserved.

When the VCV closing SL state is in AD_T_DUR mode, then the T_DLY_VCV_CLOSE_ADD is calculated through the calibration IP_T_DLY_VCV_CLOSE_SL_T_DUR.
It should be noted that the T_DLY_VCV_CLOSE_ADD is only calculated in STAT, AD_PWM and AD_T_DUR phases and is constant during AD_ON phase.

ANG_CUR_ON_VCV calculation :
The ANG_CUR_ON_VCV represents the crank angle starting from the point where the VCV has active current in the coil upto the pump TDC. This angle is referenced till the TDC of the pump is achieved. It is the sum of T_DLY_VCV_CLOSE_ADD (converted to crank angle) and VCV_CLOSE_RNG.
The ANG_CUR_ON_VCV has to be greater than ANG_CUR_OFF_VCV by atleast one resolution, and this is the reason why ANG_CUR_OFF_VCV is also considered in the calculation of ANG_CUR_ON_VCV.

T_DUR_VCV_CTL_PEAK calculation :
T_DUR_VCV_CTL_PEAK is the duration of the pull-in time or the peak current time during pull-in phase when SL is active. During normal operation T_DUR_VCV_CTL_PEAK is equal to T_DLY_VCV_CLOSE_ADD. The seperate T_DUR_VCV_CTL_PEAK calculation is only active when the SL is active.
During the STAT mode or AD_PWM mode, a constant peak current is given through the calibration C_T_DUR_VCV_CTL_PEAK_CLOSE_SL, in order to not have the peak current influence during PWM adaptation in AD_PWM mode.
During AD_T_DUR mode, the peak current is calculated out of a calibration map, IP_T_DUR_VCV_CTL_PEAK_CLOSE_SL. This map gives the peak current time to be applied depending on the last adaptated PWM value of hold phase.
During AD_ON state, the peak time is based on the calibration map mentioned above and the adaptation correction done after the T_DUR adaptation.

T_DUR_VCV_CTL_HOLD_0 calculation :
T_DUR_VCV_CTL_HOLD_0 is the time duration of the pick-up phase and is applied only when SL is active.
During STAT state and AD_ON state, additional time duration is calibrated through the constant, C_T_DLY_OFS_VCV_CTL_AD_ON.
During AD_PWM state and AD_T_DUR state, additional time duration is calibrated through the constant, C_T_DLY_OFS_VCV_CTL_AD_ACT.

Copyright ©Continental AG. Transmittal, reproduction, dissemination and/or editing of this document as well as utilisation of its contents and communication thereof to others without expressed authorisation are prohibited. Offenders will be held liable for payment of damages. All rights created by patent grant or registration of a utility model or design patent are reserved.

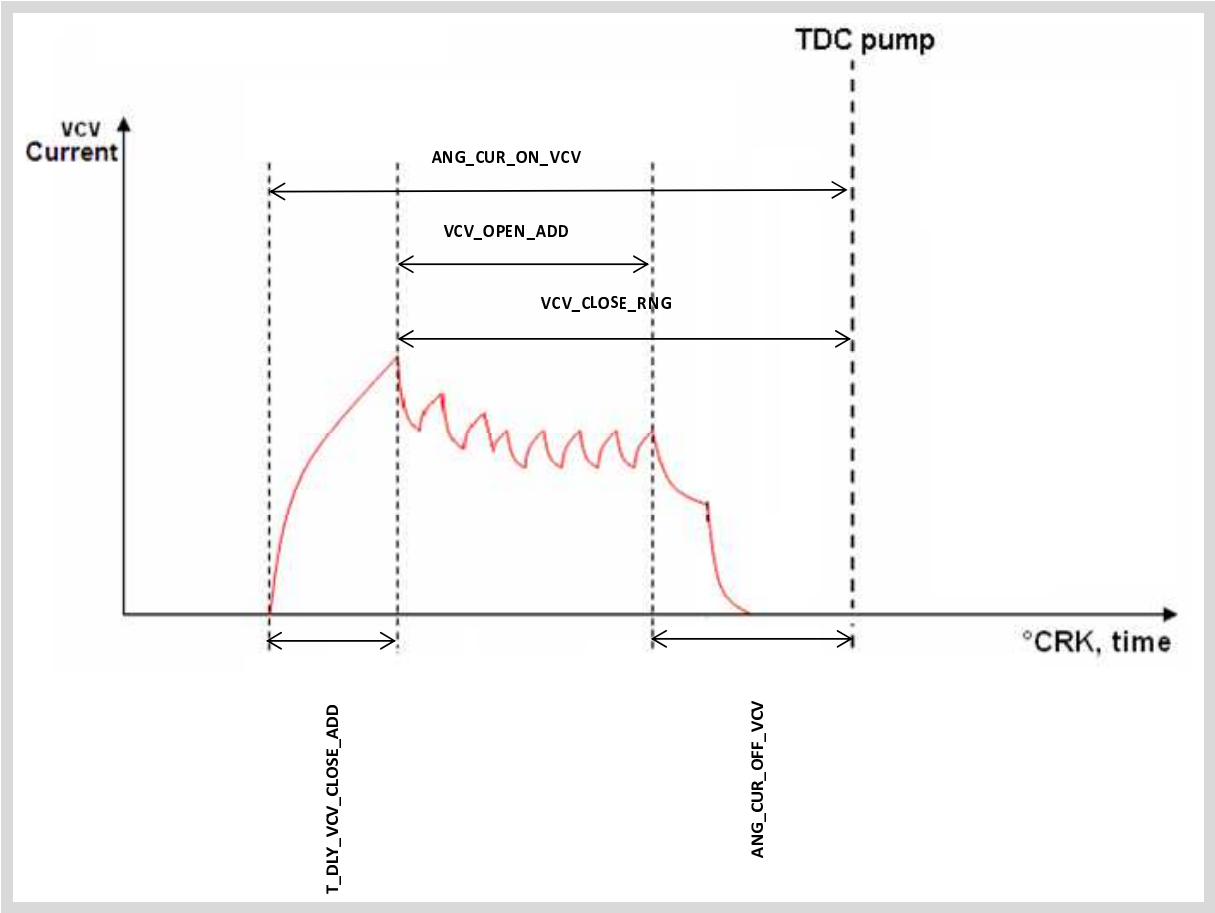

Figure 43.15.67: Control angles and time durations during normal operation

Copyright ©Continental AG. Transmittal, reproduction, dissemination and/or editing of this document as well as utilisation of its contents and communication thereof to others without expressed authorisation are prohibited. Offenders will be held liable for payment of damages. All rights created by patent grant or registration of a utility model or design patent are reserved.

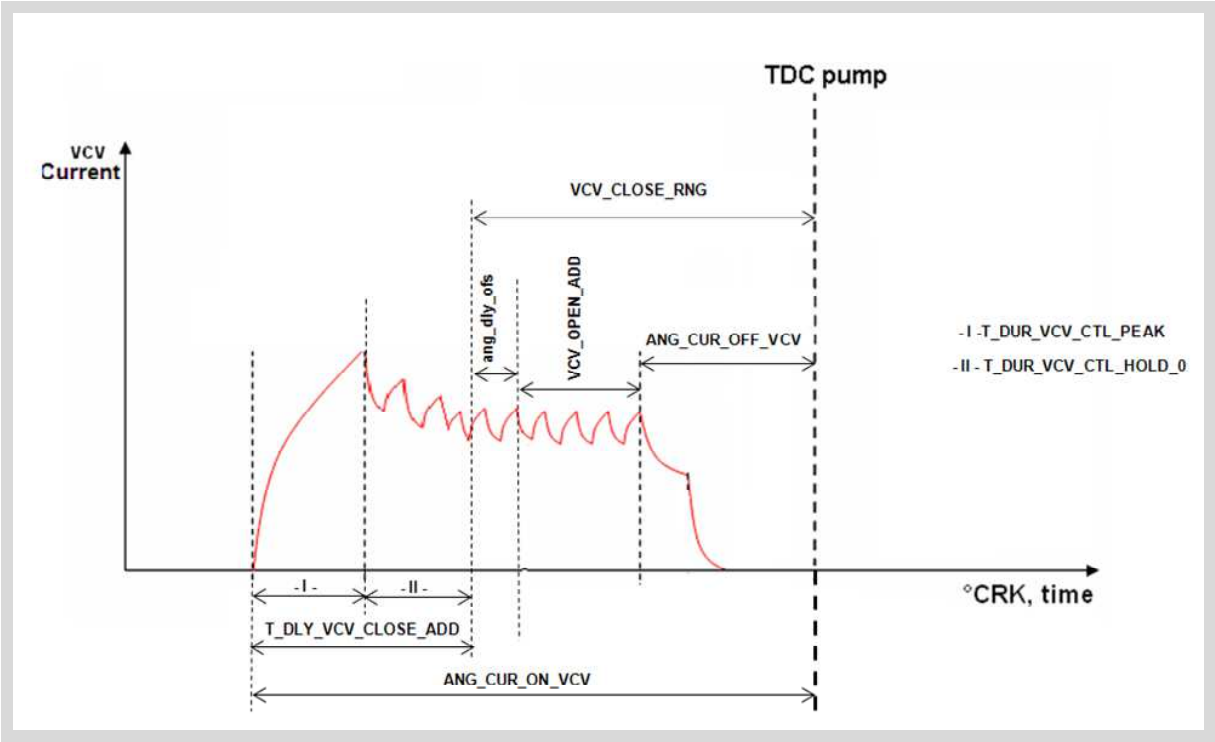

Figure 43.15.68: Control angles and time durations during SL operation

Copyright ©Continental AG. Transmittal, reproduction, dissemination and/or editing of this document as well as utilisation of its contents and communication thereof to others without expressed authorisation are prohibited. Offenders will be held liable for payment of damages. All rights created by patent grant or registration of a utility model or design patent are reserved.

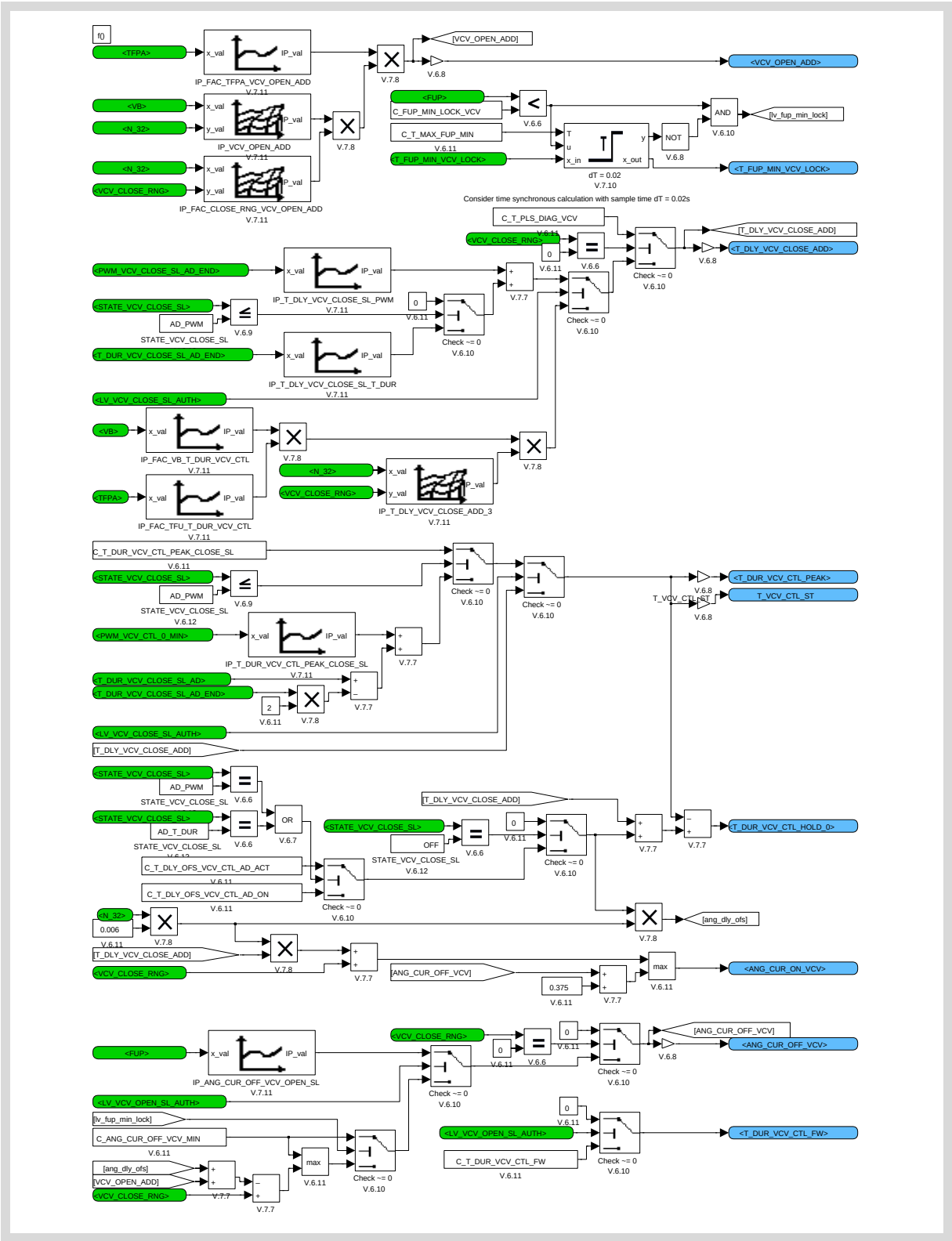

Figure 43.15.69:

Copyright ©Continental AG. Transmittal, reproduction, dissemination and/or editing of this document as well as utilisation of its contents and communication thereof to others without expressed authorisation are prohibited. Offenders will be held liable for payment of damages. All rights created by patent grant or registration of a utility model or design patent are reserved.

43.15.2.1.2.2.3.1.3.3 Control angles and times for VCV actuation for type 2 VCV

The type 2 VCV refers to the Hitachi manufactured systems. The Hitachi valves actuation parameters are calculated differently compared to the Bosch systems. Also, they do not have SL feature and hence, no adaptation and learning is needed.
During zero quantity delivery, in order to ensure minimum activation of the VCV for the power stage diagnosis, a minimum calibration time is provided through C_T_PLS_DIAG_VCV.

T_DUR_VCV_CTL_PEAK calculation :
T_DUR_VCV_CTL_PEAK is the peak current duration during pull-in phase. It is calculated based on two calibration maps,
IP_T_DUR_VCV_CTL_BAS – this is the base map dependant on battery voltage and engine speed.
IP_FAC_TFU_T_DUR_VCV_CTL – this is the correction factor to the base map dependant on the VCV coil temperature.

VCV_OPEN_ADD calculation :
VCV_OPEN_ADD is the total duration of active current phase of the VCV in terms of crank angle. It is also calculated based on two calibration maps,
IP_T_VCV_OPEN_ADD – this is the base map dependant on battery voltage and engine speed.
IP_FAC_TFPA_VCV_OPEN_ADD – this is the correction factor to the base map dependant on the VCV coil temperature.

T_DLY_VCV_CLOSE_ADD calculation :
T_DLY_VCV_CLOSE_ADD is the duration of current to be applied to the VCV until it closes. It is calculated based on three calibration maps,
IP_T_DLY_VCV_CLOSE_ADD_3 – this is the base map dependant on engine speed and closing angle of VCV.
IP_T_DLY_VCV_VB_ADD – this is the base map dependant on battery voltage.
IP_FAC_T_DLY_VCV_CLOSE_ADD_VB – this is the correction factor to the base map dependant on engine speed and closing angle of VCV.

T_DUR_VCV_CTL_FW calculation :
The free wheel time is calibrated through a constant, C_T_DUR_VCV_CTL_FW.

ANG_CUR_ON_VCV calculation :
The ANG_CUR_ON_VCV represents the crank angle starting from the point where the VCV has active current in the coil upto the pump TDC. This angle is referenced till the TDC of the pump is achieved. It is the addition of T_DLY_VCV_CLOSE_ADD (in terms of crank angle) and VCV_CLOSE_RNG (closing angle of VCV).

ANG_CUR_OFF_VCV calculation :
The ANG_CUR_OFF_VCV represents the crank angle at which the current is switched off to the VCV coil.
This angle is referenced till the TDC of the pump is achieved. ANG_CUR_OFF_VCV is the duration in terms of crank angle from the end of hold phase to the pump TDC.
It is the difference of VCV_OPEN_ADD from ANG_CUR_ON_VCV.
If the timer T_FUP_MIN_VCV_LOCK is active, then the ANG_CUR_OFF_VCV is calibrated through the constant C_ANG_CUR_OFF_VCV_MIN.

T_FUP_MIN_VCV_LOCK calculation :
In case the pressure developed inside the pump is lesser than a calibrated threshold C_FUP_MIN_LOCK_VCV (usually around 20 bar), then the hydraulic pressure developed inside the pump chamber is not sufficient in aiding the closure of the VCV during the delivery stroke. So, in order to close the VCV during such situations, a timer is used to keep the current of VCV for extended times and close to the TDC of the pump. This allows the VCV to be closed through the current given to it, regardless of the low pressure in the pump chamber. But, this extended current duration is also limited through a calibration C_T_MAX_FUP_MIN in order to prevent the VCV from over heating.

Copyright ©Continental AG. Transmittal, reproduction, dissemination and/or editing of this document as well as utilisation of its contents and communication thereof to others without expressed authorisation are prohibited. Offenders will be held liable for payment of damages. All rights created by patent grant or registration of a utility model or design patent are reserved.

It has to be noted that in the type 2 VCV, ang_dly_ofs and T_DUR_VCV_CTL_HOLD_0 parameters are absent.

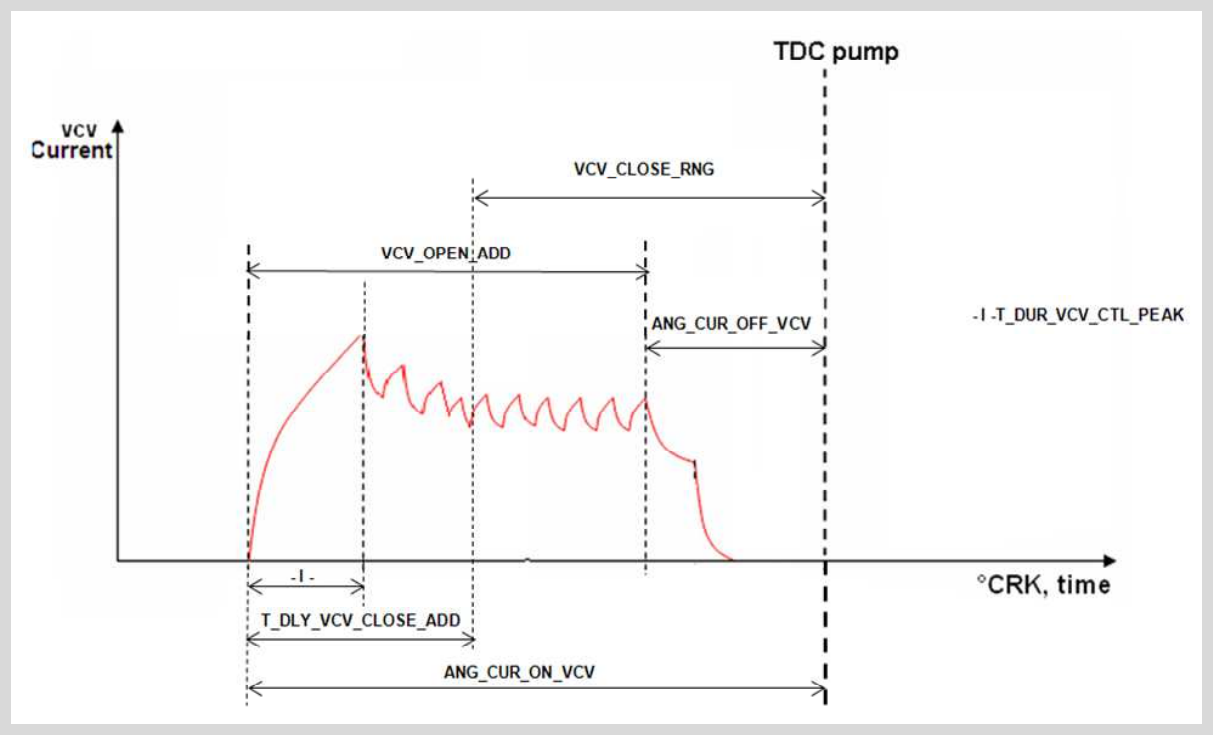

Figure 43.15.70: Control angles and time durations for type 2 VCV

Copyright ©Continental AG. Transmittal, reproduction, dissemination and/or editing of this document as well as utilisation of its contents and communication thereof to others without expressed authorisation are prohibited. Offenders will be held liable for payment of damages. All rights created by patent grant or registration of a utility model or design patent are reserved.

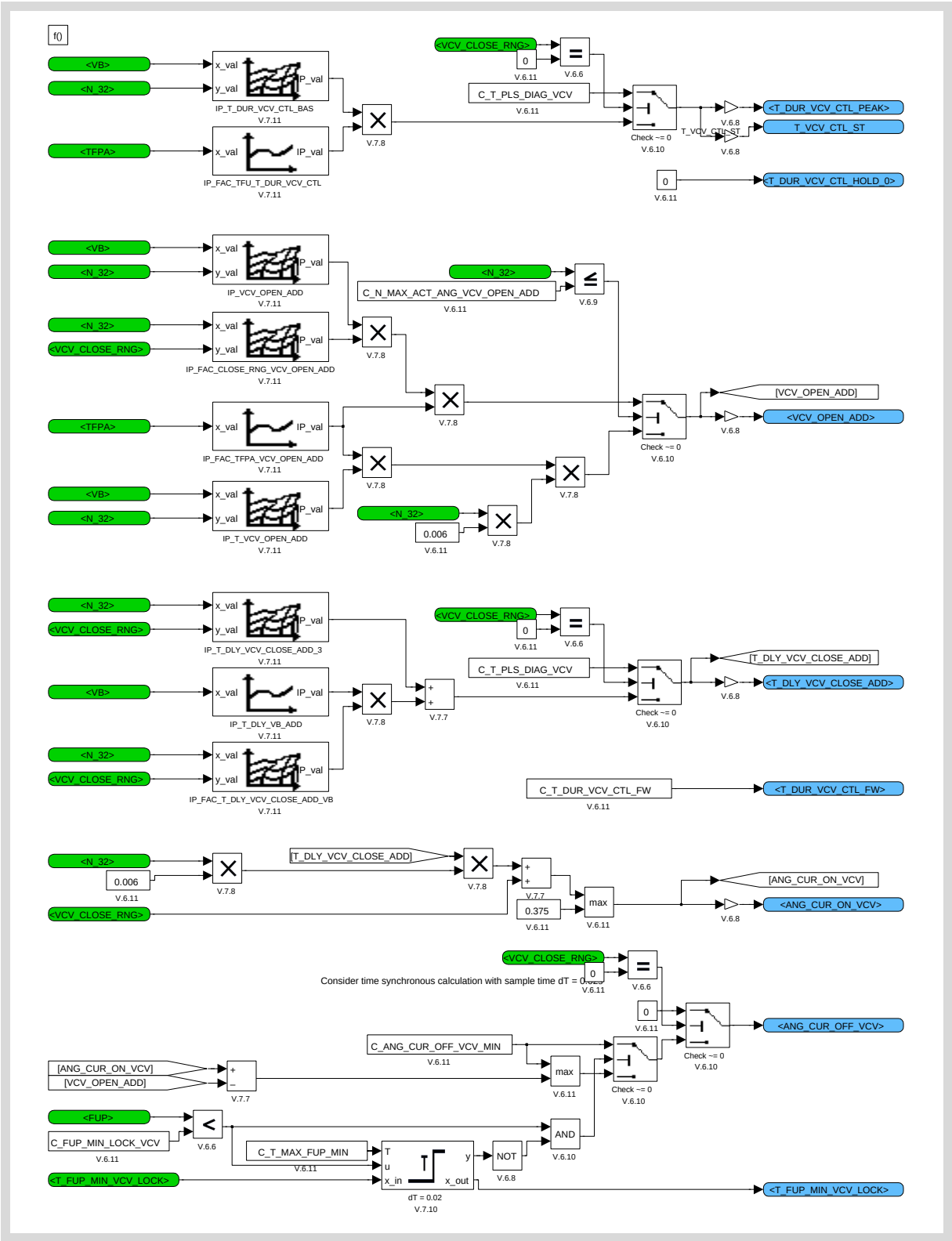

Figure 43.15.71:

Copyright ©Continental AG. Transmittal, reproduction, dissemination and/or editing of this document as well as utilisation of its contents and communication thereof to others without expressed authorisation are prohibited. Offenders will be held liable for payment of damages. All rights created by patent grant or registration of a utility model or design patent are reserved.

43.15.2.1.2.2.3.1.4 Actuation parameters for VCV deacceleration impulse

The below subsystem calculates the actuation parameters for VCV deacceleration phase or the VCV opening SL phase. VCV opening SL can be applied to only Bosch systems.
The below figure shows the opening SL parameters. The opening SL pulse does not contain peak time since the peak currents are lower than the closing SL pulse, the maximum current height can be obtained by the PWM hold cycle itself. The parameters for the opening SL are explained in the next subsystem.

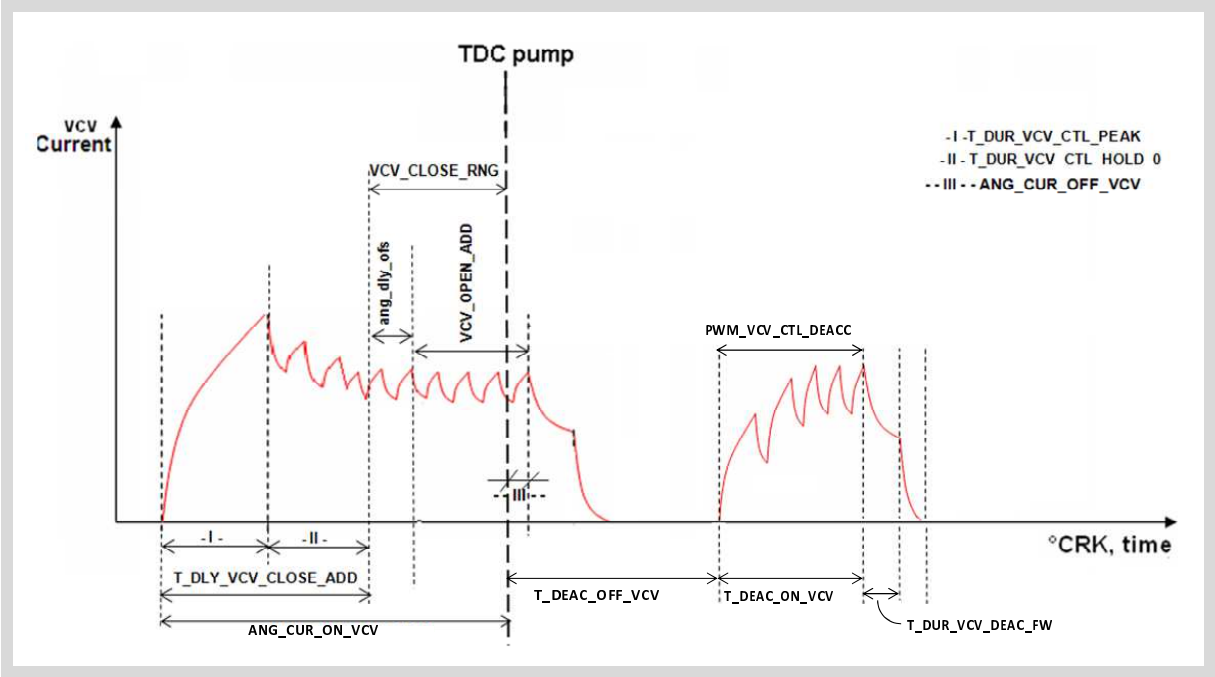

Figure 43.15.72: VCV deacceleration pulse parameters

Copyright ©Continental AG. Transmittal, reproduction, dissemination and/or editing of this document as well as utilisation of its contents and communication thereof to others without expressed authorisation are prohibited. Offenders will be held liable for payment of damages. All rights created by patent grant or registration of a utility model or design patent are reserved.

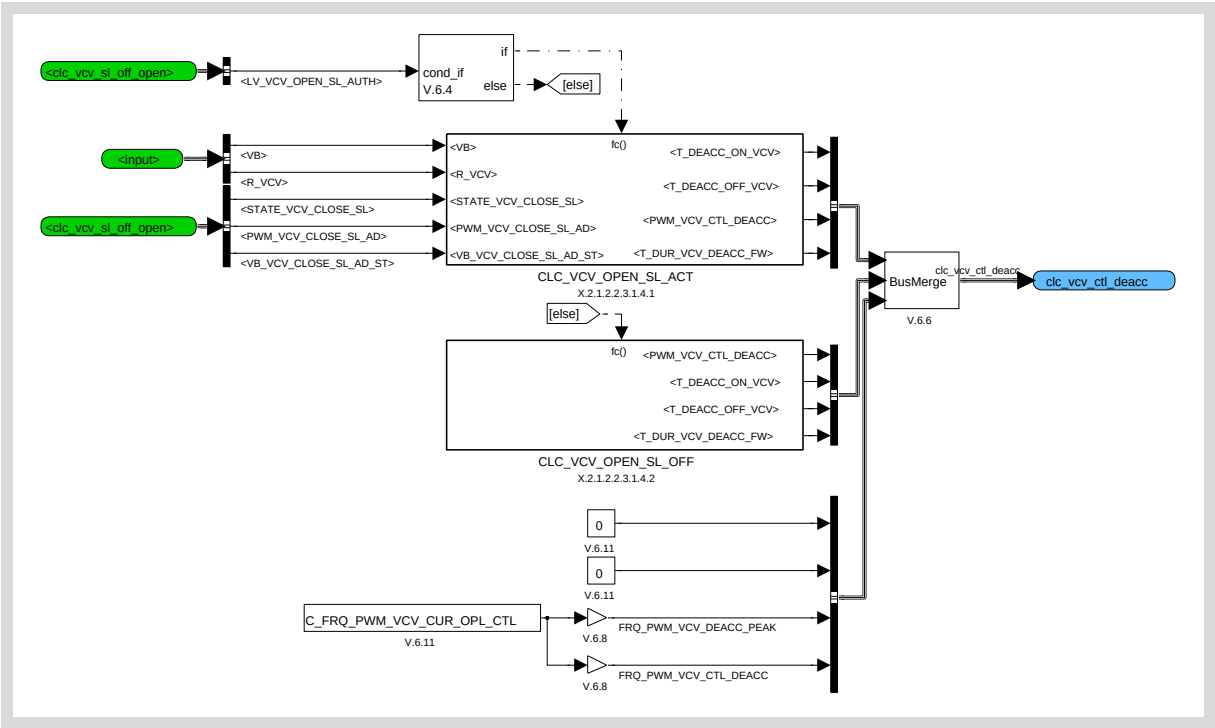

Figure 43.15.73:

43.15.2.1.2.2.3.1.4.1 Deacceleration parameters for active soft landing during VCV opening

The main parameters for VCV opening SL are,

T_DEAC_OFF_VCV calculation :
Start of PWM duty cycle with reference to pump TDC is given through the base map IP_T_DEACC_OFF_VCV_BAS which is dependant on the battery voltage and VCV resistance (coil temperature).
In case the VCV closing SL adaptation is finished, then an offset correction is done through the calibration map IP_T_DEACC_OFF_VCV_AD_OFS based on the adaptation parameter of VCV closing SL and battery voltage at start of VCV closing SL.

PWM_VCV_CTL_DEACC calculation :
PWM duty cycle value is given through the base map IP_PWM_VCV_CTL_DEACC_BAS which is dependant on the battery voltage and VCV resistance (coil temperature).
In case the VCV closing SL adaptation is finished, then an offset correction is done through the calibration map IP_PWM_VCV_CTL_DEACC_AD_OFS based on the adaptation parameter of VCV closing SL and battery voltage at start of VCV closing SL.

T_DEAC_ON_VCV calculation :
PWM duty cycle application time for hold phase is given through the calibration constant C_T_DUR_VCV_DEACC.

T_DUR_DEAC_VCV_FW calculation :
Free wheeling time is given through the calibration constant C_T_DUR_VCV_DEACC_FW.

Copyright ©Continental AG. Transmittal, reproduction, dissemination and/or editing of this document as well as utilisation of its contents and communication thereof to others without expressed authorisation are prohibited. Offenders will be held liable for payment of damages. All rights created by patent grant or registration of a utility model or design patent are reserved.

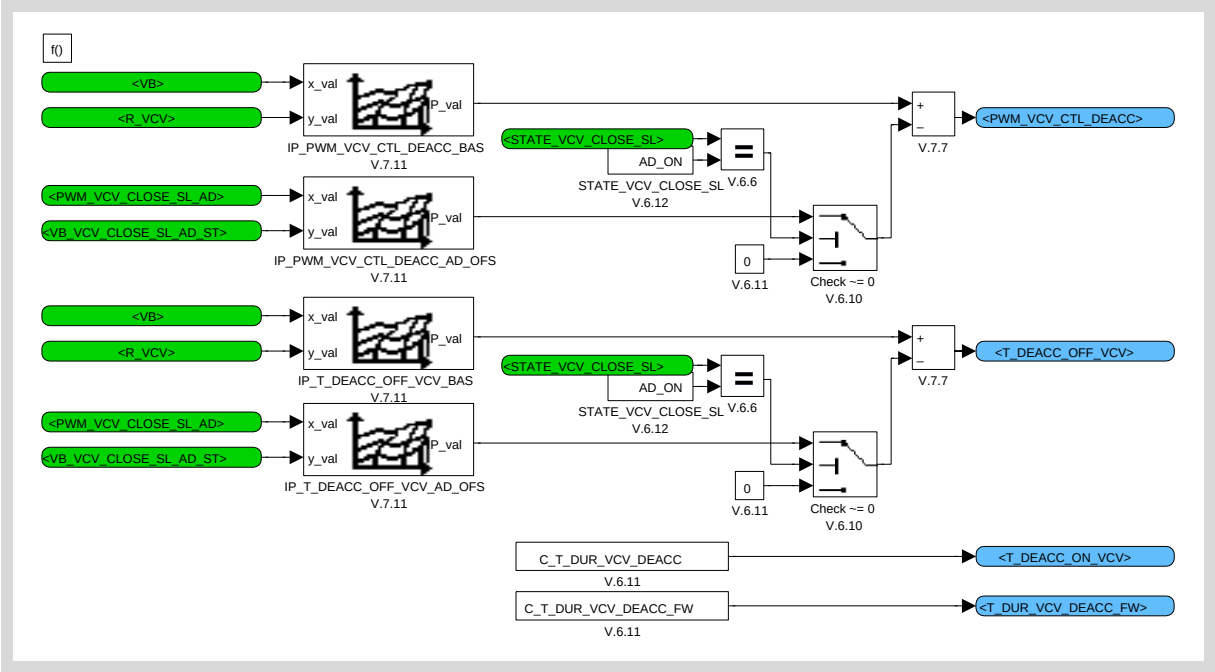

Figure 43.15.74:

43.15.2.1.2.2.3.1.4.2 Deacceleration parameters for deactivated soft landing during VCV opening

The actuation parameters are set to zero when the opening SL is not active.

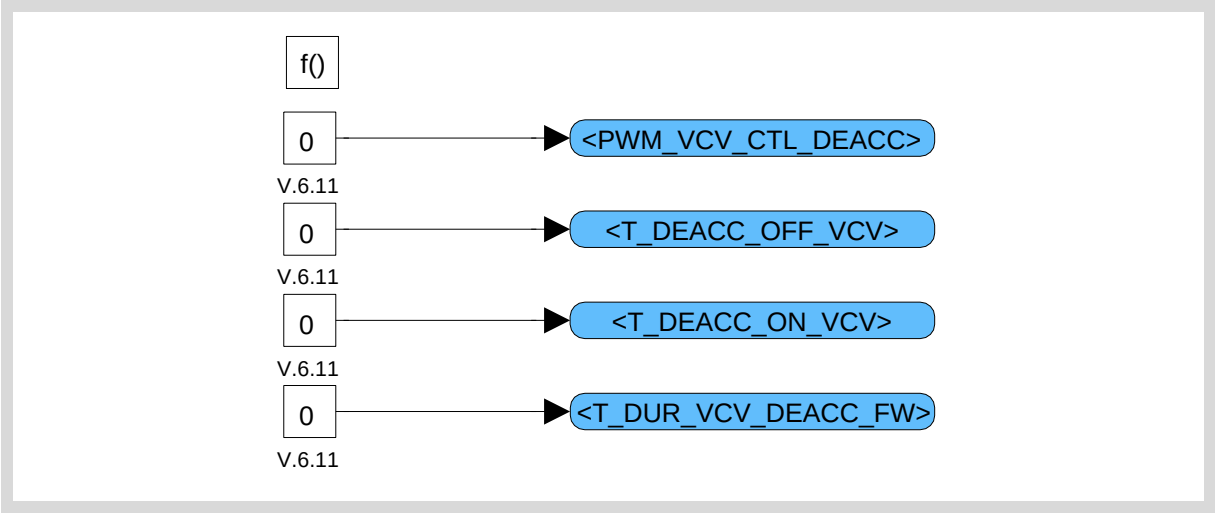

Figure 43.15.75:

Copyright ©Continental AG. Transmittal, reproduction, dissemination and/or editing of this document as well as utilisation of its contents and communication thereof to others without expressed authorisation are prohibited. Offenders will be held liable for payment of damages. All rights created by patent grant or registration of a utility model or design patent are reserved.

43.15.2.1.2.2.3.1.5 Closed loop controlled actuation of VCV

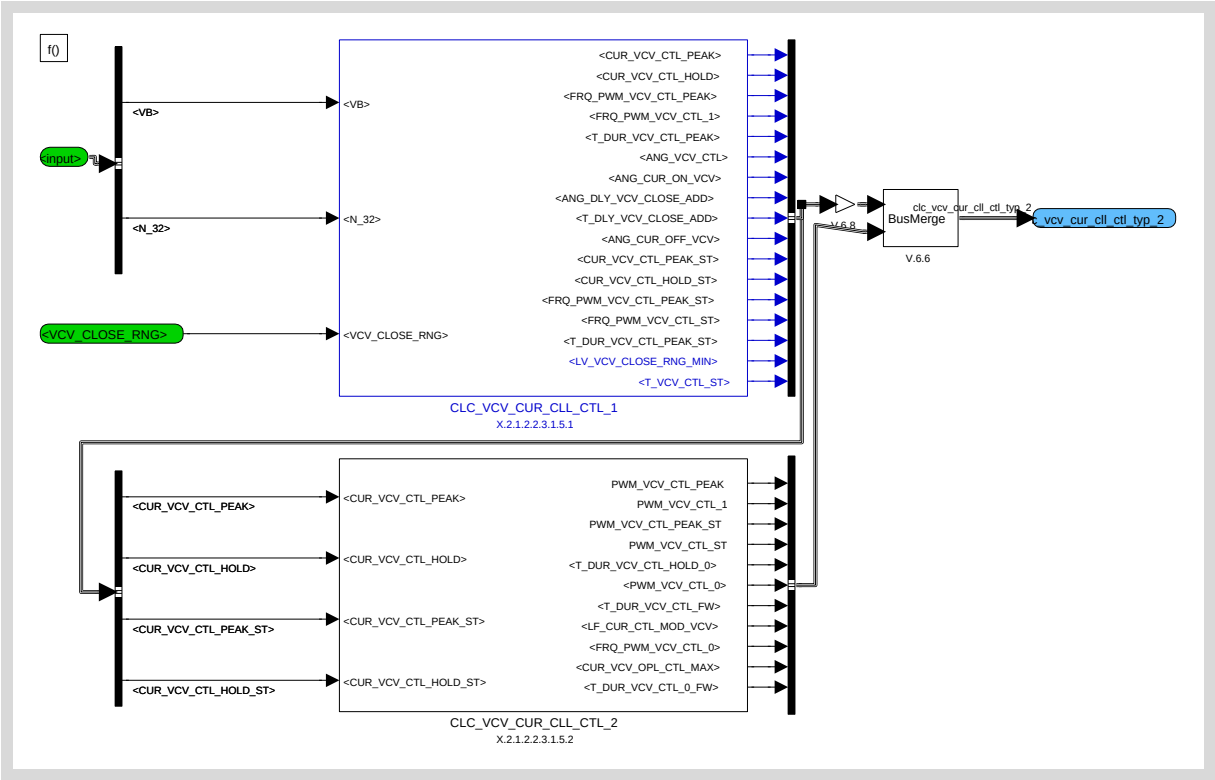

Figure 43.15.76:

Copyright ©Continental AG. Transmittal, reproduction, dissemination and/or editing of this document as well as utilisation of its contents and communication thereof to others without expressed authorisation are prohibited. Offenders will be held liable for payment of damages. All rights created by patent grant or registration of a utility model or design patent are reserved.

43.15.2.1.2.2.3.1.5.1 Closed loop controlled actuation of VCV (Part 1)

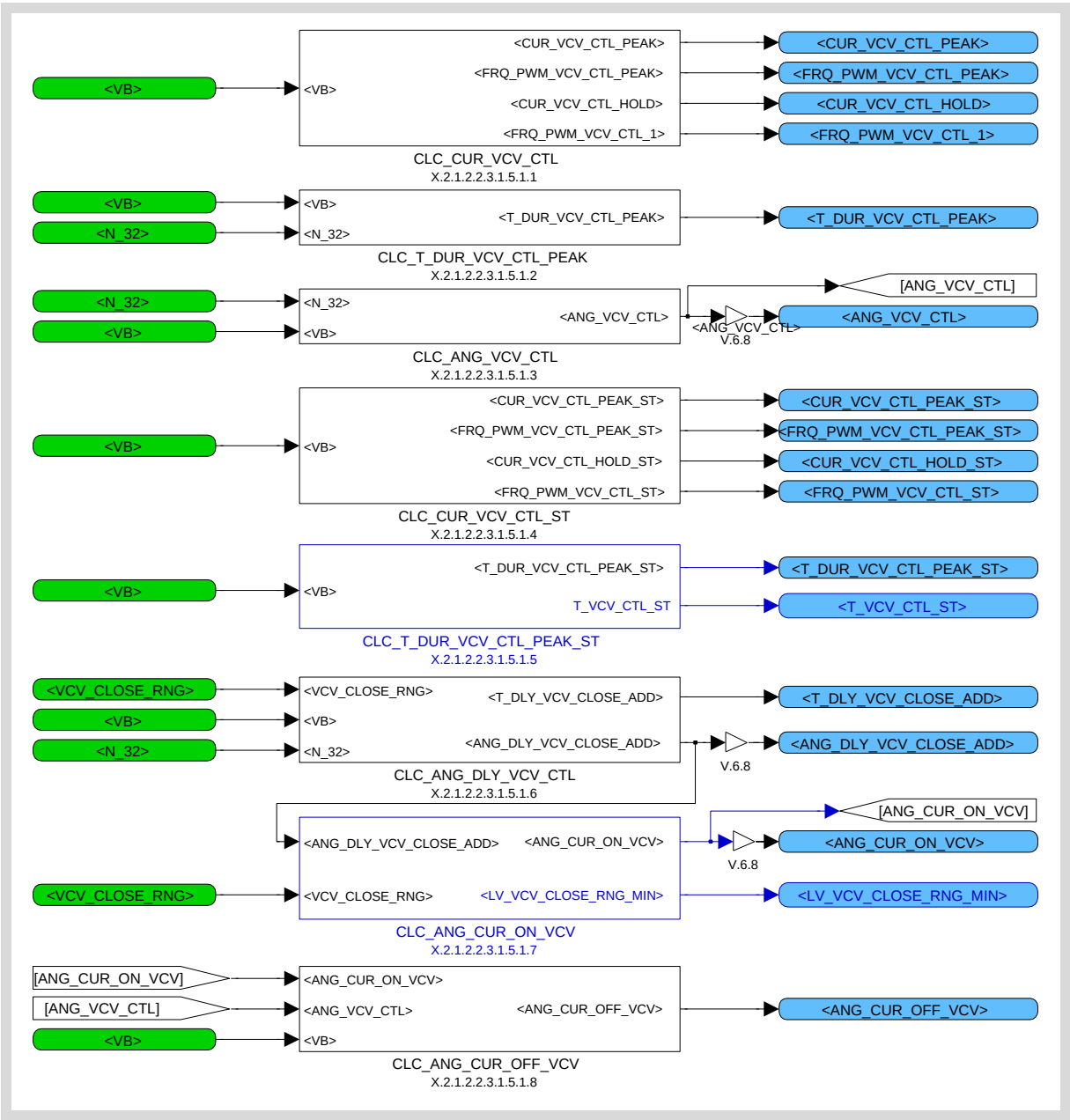

Figure 43.15.77:

Copyright ©Continental AG. Transmittal, reproduction, dissemination and/or editing of this document as well as utilisation of its contents and communication thereof to others without expressed authorisation are prohibited. Offenders will be held liable for payment of damages. All rights created by patent grant or registration of a utility model or design patent are reserved.

43.15.2.1.2.2.3.1.5.1.1 Set point for VCV current closed loop control during peak phase

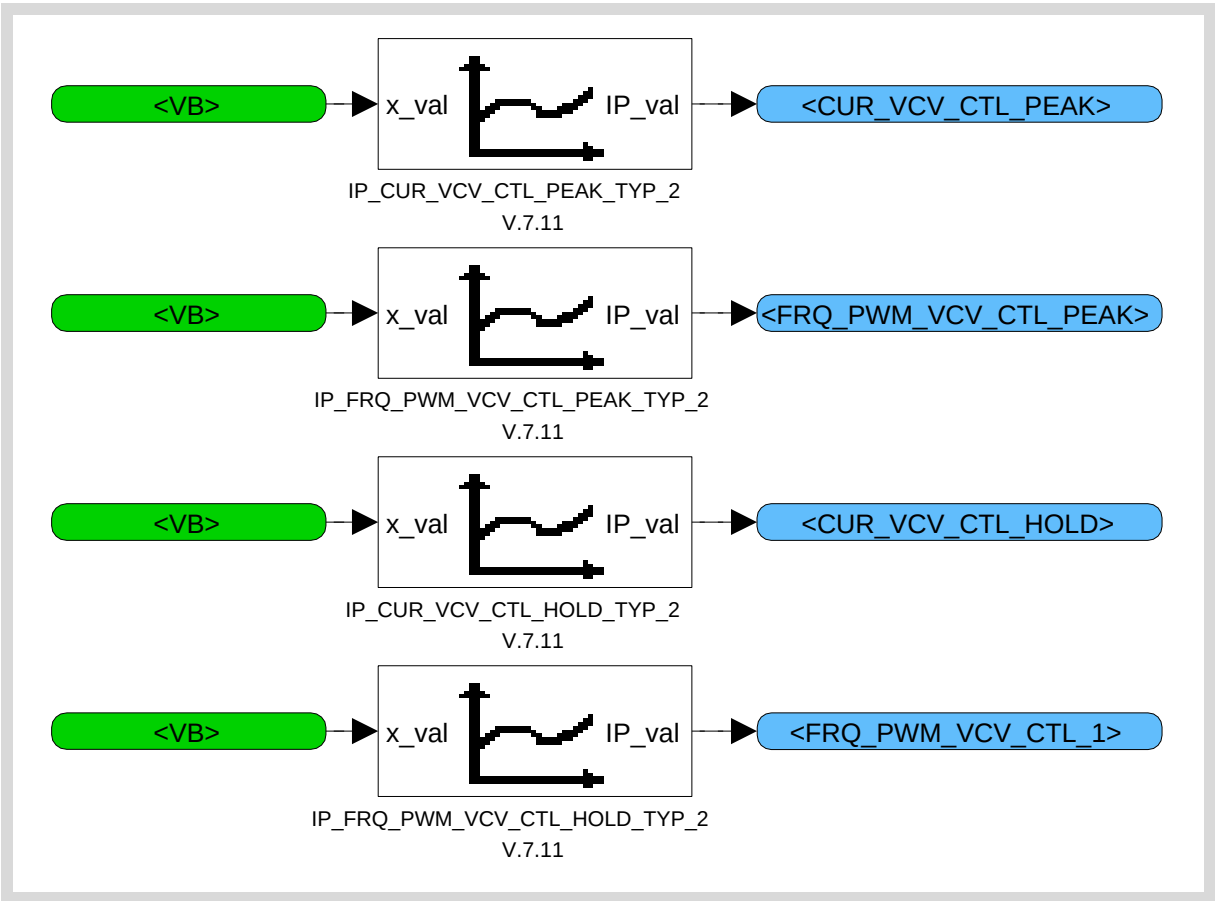

Figure 43.15.78:

43.15.2.1.2.2.3.1.5.1.2 Duration for pull-in phase during VCV closing

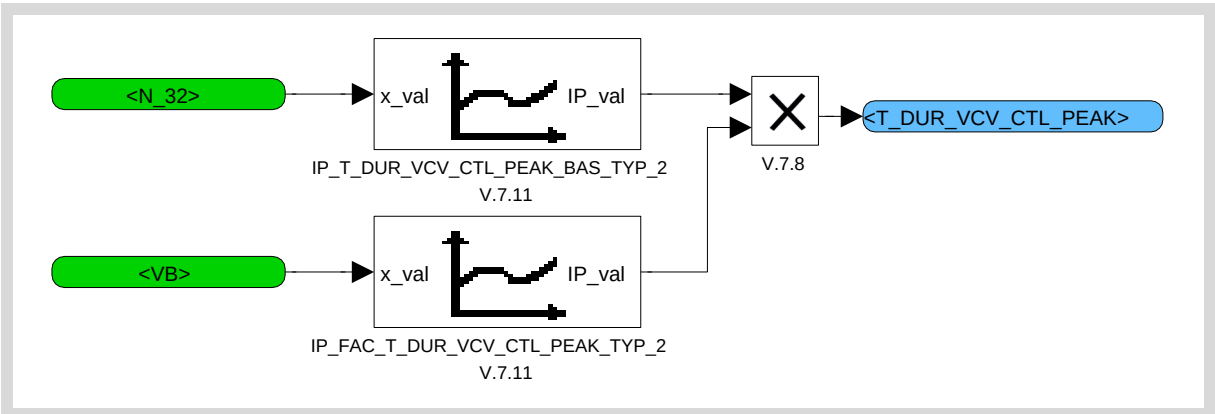

Figure 43.15.79:

Copyright ©Continental AG. Transmittal, reproduction, dissemination and/or editing of this document as well as utilisation of its contents and communication thereof to others without expressed authorisation are prohibited. Offenders will be held liable for payment of damages. All rights created by patent grant or registration of a utility model or design patent are reserved.

43.15.2.1.2.2.3.1.5.1.3 VCV holding angle

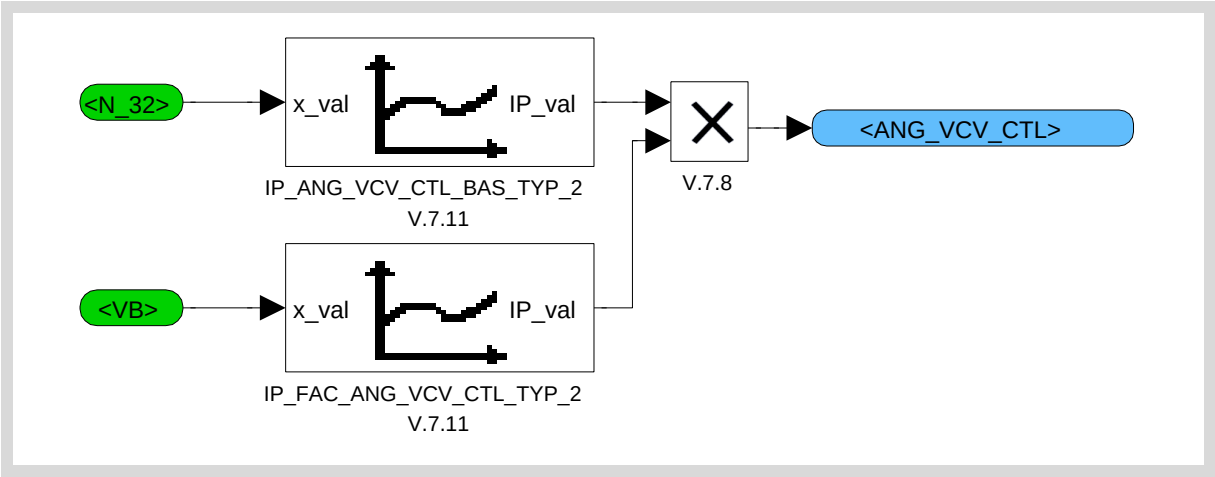

Figure 43.15.80:

Copyright ©Continental AG. Transmittal, reproduction, dissemination and/or editing of this document as well as utilisation of its contents and communication thereof to others without expressed authorisation are prohibited. Offenders will be held liable for payment of damages. All rights created by patent grant or registration of a utility model or design patent are reserved.

43.15.2.1.2.2.3.1.5.1.4 Set point for VCV current closed loop control during peak phase

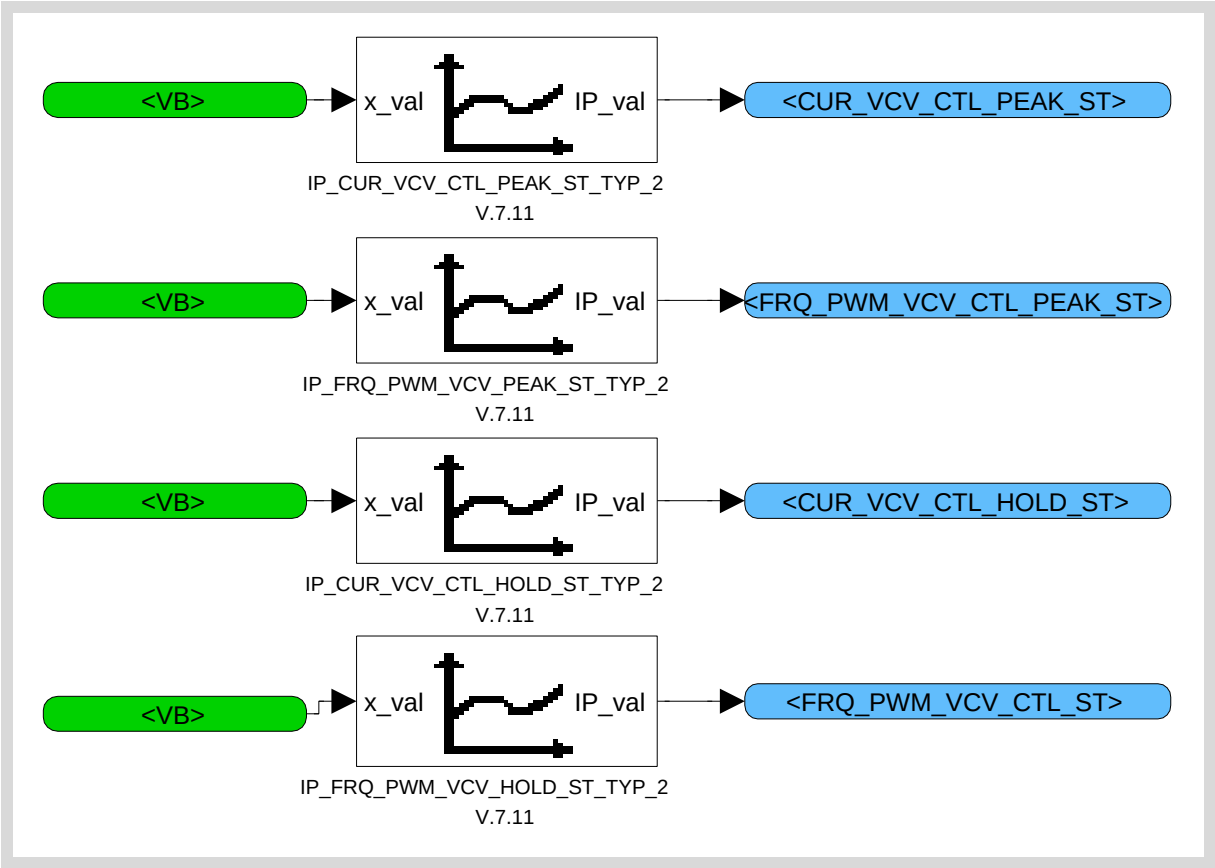

Figure 43.15.81:

43.15.2.1.2.2.3.1.5.1.5 Duration for pull-in phase during VCV closing

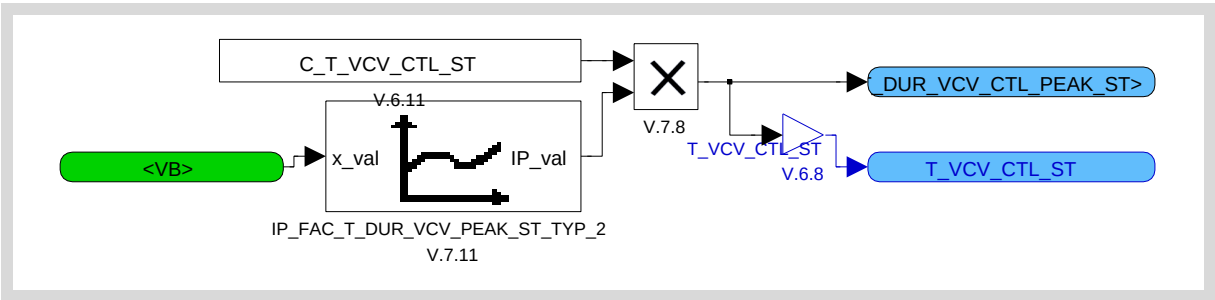

Figure 43.15.82:

Copyright ©Continental AG. Transmittal, reproduction, dissemination and/or editing of this document as well as utilisation of its contents and communication thereof to others without expressed authorisation are prohibited. Offenders will be held liable for payment of damages. All rights created by patent grant or registration of a utility model or design patent are reserved.

43.15.2.1.2.2.3.1.5.1.6 Calculation of mechanical delay time and angle between VCV current feed and VCV closing

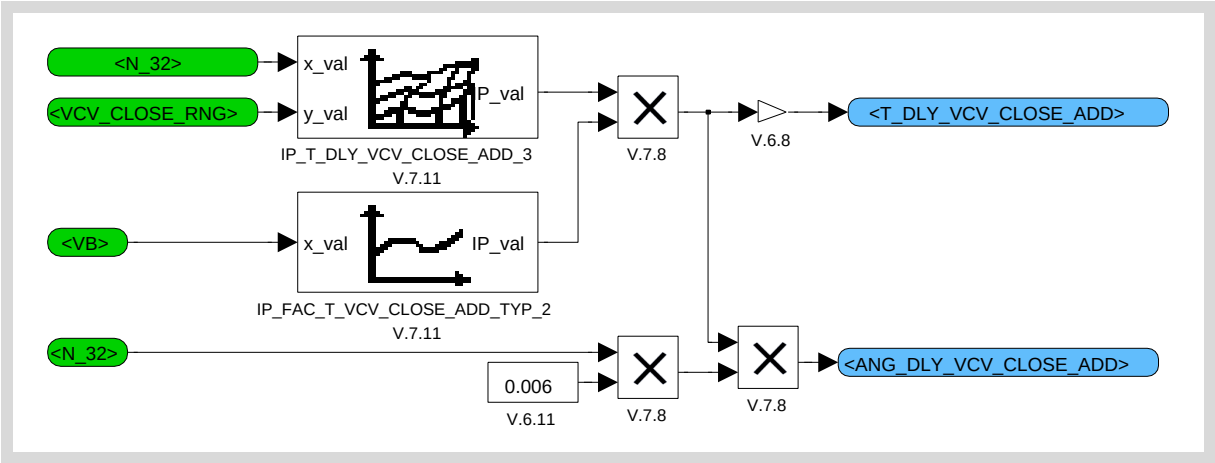

Figure 43.15.83:

43.15.2.1.2.2.3.1.5.1.7 Angle to begin current feed of the VCV

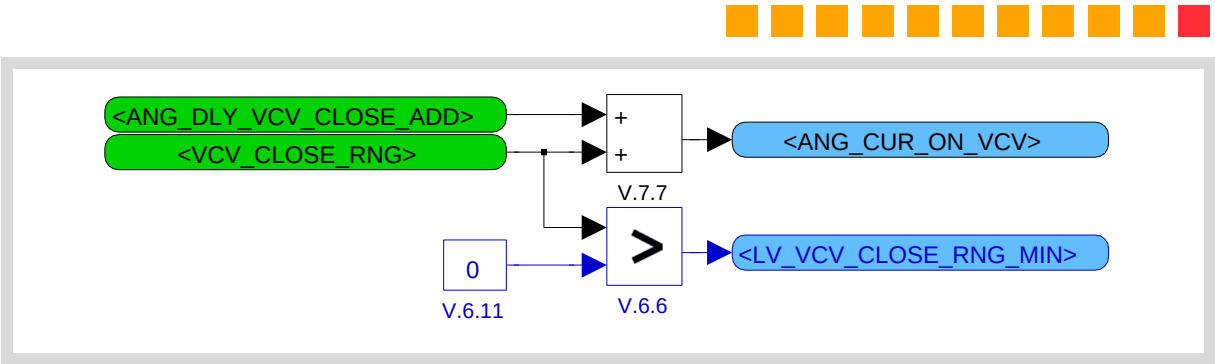

Figure 43.15.84:

Copyright ©Continental AG. Transmittal, reproduction, dissemination and/or editing of this document as well as utilisation of its contents and communication thereof to others without expressed authorisation are prohibited. Offenders will be held liable for payment of damages. All rights created by patent grant or registration of a utility model or design patent are reserved.

43.15.2.1.2.2.3.1.5.1.8 Angle to end current feed of the VCV

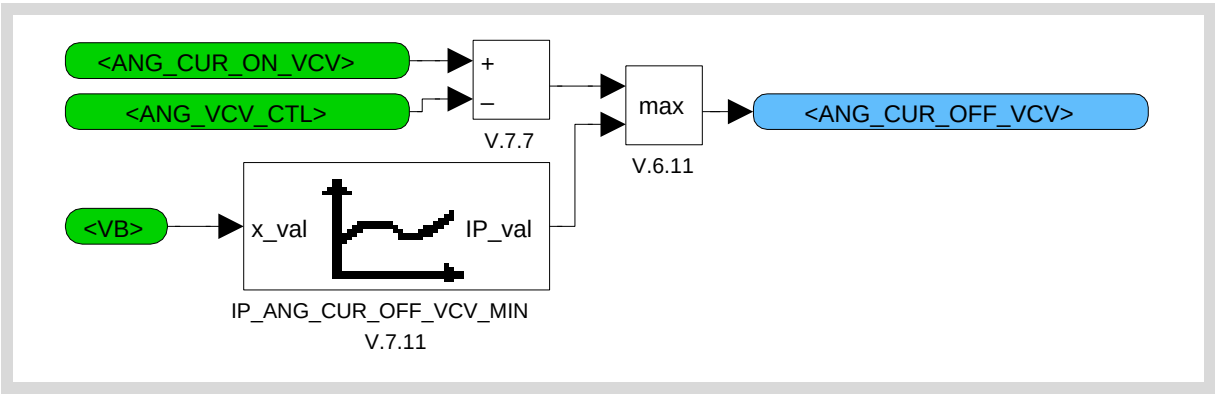

Figure 43.15.85:

43.15.2.1.2.2.3.1.5.2 Closed loop controlled actuation of VCV (Part 2)

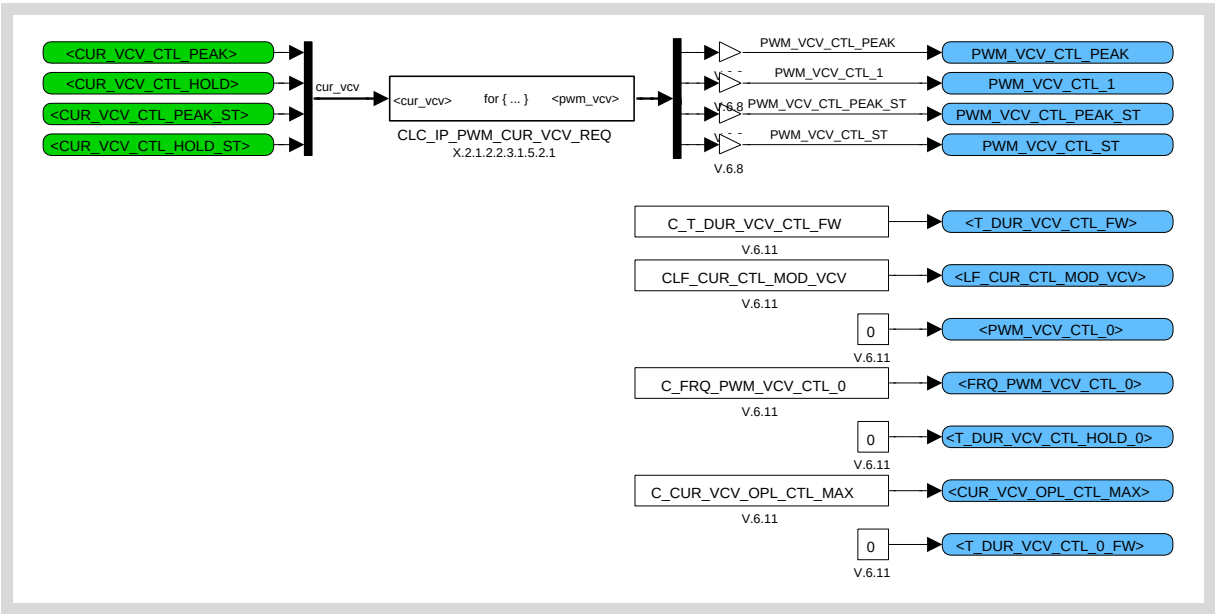

Figure 43.15.86:

43.15.2.1.2.2.3.1.5.2.1 Calculation of phase specific current set points of VCV control pulse

For each VCV control pulse phase a current set point is transferred into its respective duty-cycle.

Copyright ©Continental AG. Transmittal, reproduction, dissemination and/or editing of this document as well as utilisation of its contents and communication thereof to others without expressed authorisation are prohibited. Offenders will be held liable for payment of damages. All rights created by patent grant or registration of a utility model or design patent are reserved.

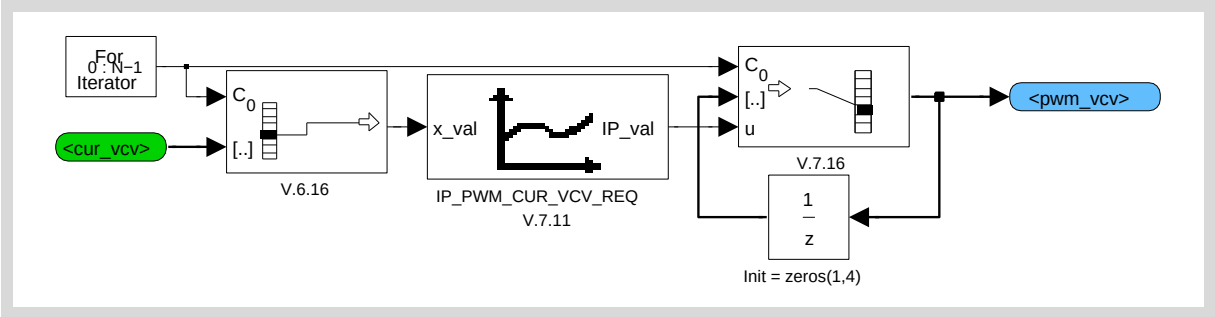

Figure 43.15.87:

43.15.2.1.2.2.3.2 Actuator calculation for currentless close VCV

The following subsystems describe the actuator parameter calculation for currentless close type VCV. It has to be noted that there is no SL feature available for currentless close type VCV. But, the basic actuation current profile is same as currentless open type VCV and is given below.

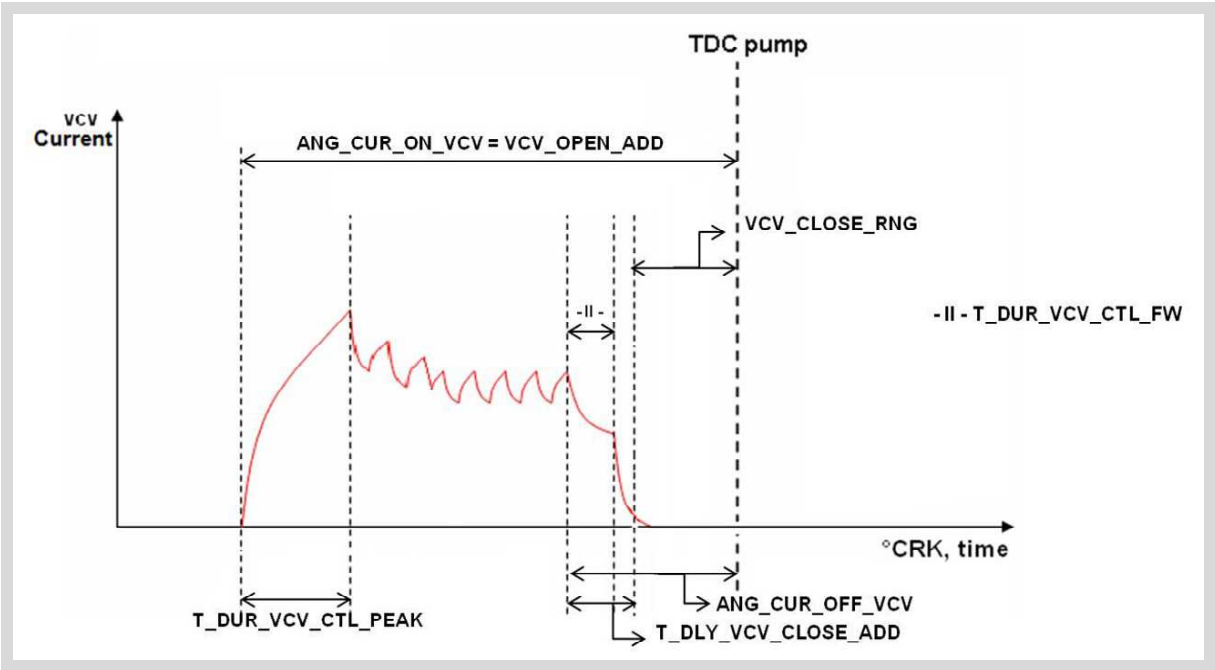

Figure 43.15.88: Control angles and time durations for currentless closed VCV

Copyright ©Continental AG. Transmittal, reproduction, dissemination and/or editing of this document as well as utilisation of its contents and communication thereof to others without expressed authorisation are prohibited. Offenders will be held liable for payment of damages. All rights created by patent grant or registration of a utility model or design patent are reserved.

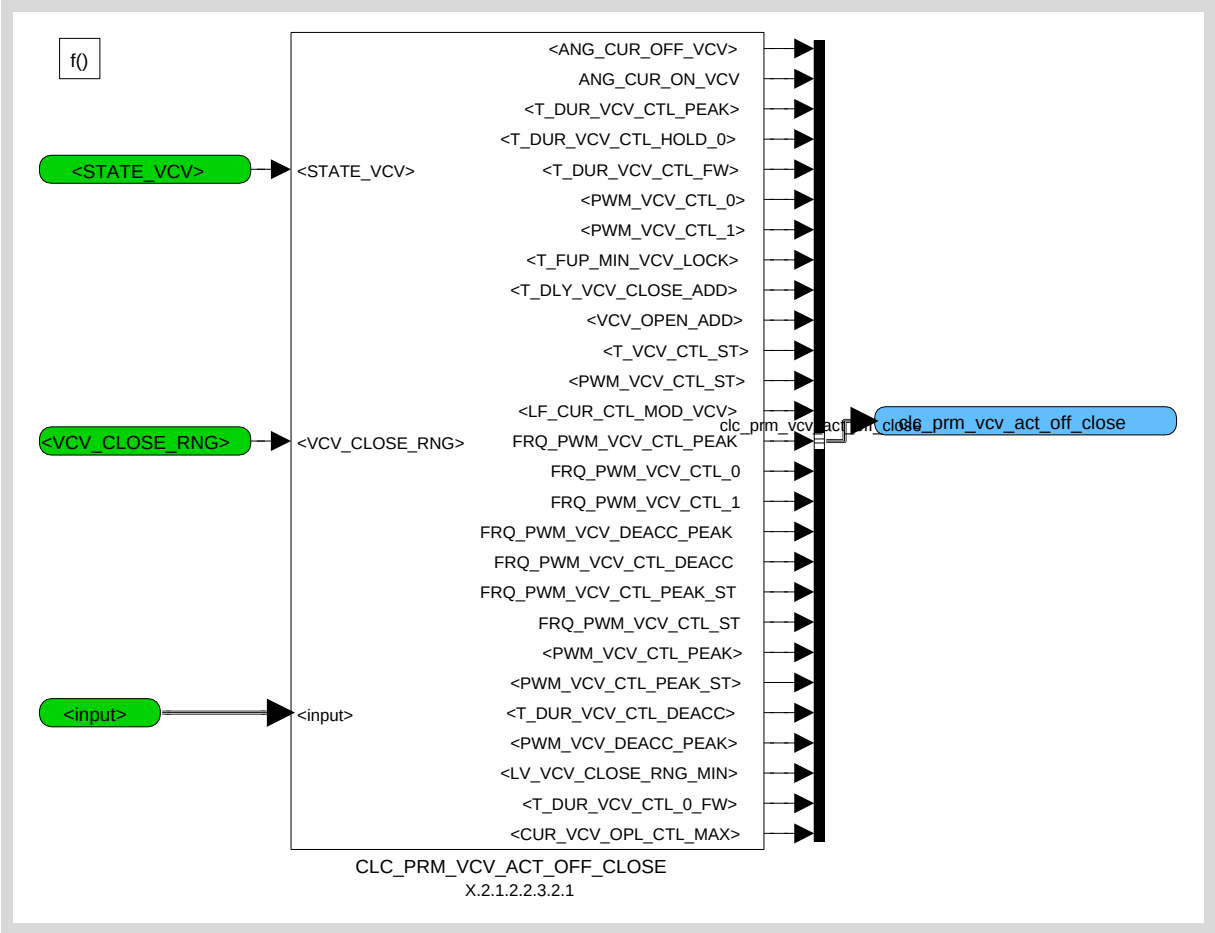

Figure 43.15.89: Control angles and time durations for currentless closed VCV

43.15.2.1.2.2.3.2.1 Calculation of VCV current control parameters for currentless closed VCVs

The actuation and control parameters for currentless close VCV are given below.

ANG_CUR_ON_VCV calculation :
The ANG_CUR_ON_VCV represents the crank angle starting from the point where the VCV has active current in the coil upto the pump TDC. This angle is referenced till the TDC of the pump is achieved. It is calculated through the base calibration map IP_VCV_OPEN_ADD dependant on battery voltage and engine speed.

T_DUR_VCV_CTL_PEAK calculation :
T_DUR_VCV_CTL_PEAK is the peak current duration during pull-in phase. It is calculated through the base calibration map IP_T_DUR_VCV_CTL_1 dependant on VCV closing angle and engine speed.
It has to be noted that the parameter T_DUR_VCV_CTL_HOLD_0 is not used for currentless close type VCV since SL feature is not available.

T_DLY_VCV_CLOSE_ADD calculation :
T_DLY_VCV_CLOSE_ADD is the delay time between deactivation of VCV current feed and mechanical closing of the VCV. So this is the duration of current NOT to be applied to the VCV until it closes. It is calculated through the base calibration map IP_T_DLY_VCV_CLOSE_ADD_3 dependant on VCV closing angle and engine

Copyright ©Continental AG. Transmittal, reproduction, dissemination and/or editing of this document as well as utilisation of its contents and communication thereof to others without expressed authorisation are prohibited. Offenders will be held liable for payment of damages. All rights created by patent grant or registration of a utility model or design patent are reserved.

speed. The additional angle correction (ang_dly_vcv) is required to calculate the angle responding to T_DLY_VCV_CLOSE_ADD, because current feed off event is set by ANG_CUR_OFF_VCV.

ANG_CUR_OFF_VCV calculation :
The ANG_CUR_OFF_VCV represents the crank angle at which the current is switched off to the VCV coil.
This angle is referenced till the TDC of the pump is achieved. ANG_CUR_OFF_VCV is the duration in terms of crank angle from the end of hold phase to the pump TDC.
In case of zero delivery, the angle is set to zero. Under normal operation, it is calculated through the VCV closing angle plus ang_dly_vcv or through the calibration map IP_VCV_OPEN_LIM_3 (dependant on battery voltage and engine speed). This map is to ensure zero current at TDC for the next actuation cycle. If there is residual inductivity at TDC due to the previous cycle, then the current in the next cycle gets affected and exact opening angle of the VCV cannot be exactly determined.

T_DUR_VCV_CTL_FW calculation :
The free wheel time is calibrated through a constant, C_T_DUR_VCV_CTL_FW.

It has to be noted that the parameter low pressure timer T_FUP_MIN_VCV_LOCK is not used for currentless close type VCV, since the default position of the VCV is to close, in case of zero current applied to it.
It has to be noted that the parameter VCV_OPEN_ADD is not used for currentless close type VCV.

Copyright ©Continental AG. Transmittal, reproduction, dissemination and/or editing of this document as well as utilisation of its contents and communication thereof to others without expressed authorisation are prohibited. Offenders will be held liable for payment of damages. All rights created by patent grant or registration of a utility model or design patent are reserved.

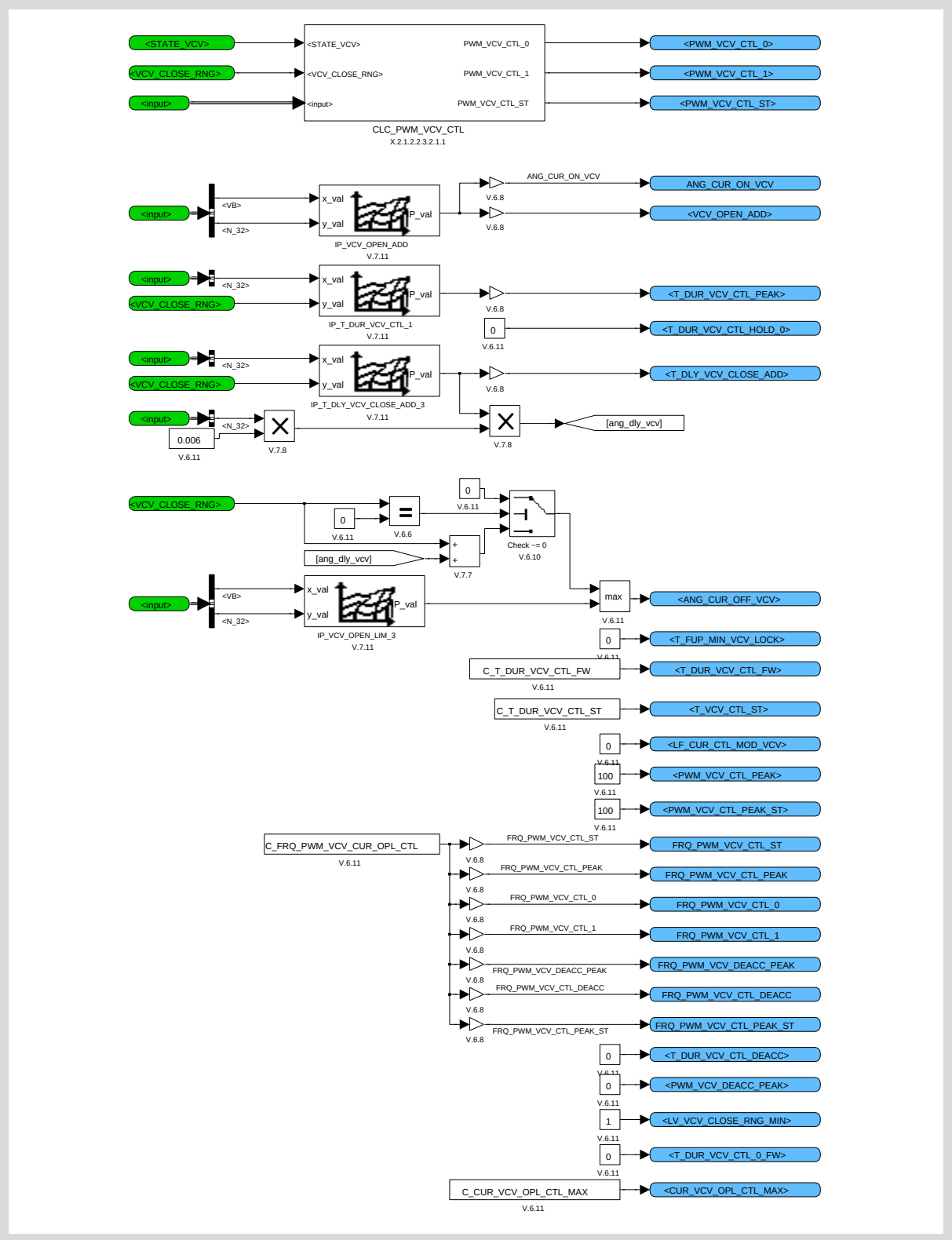

Figure 43.15.90:

Copyright ©Continental AG. Transmittal, reproduction, dissemination and/or editing of this document as well as utilisation of its contents and communication thereof to others without expressed authorisation are prohibited. Offenders will be held liable for payment of damages. All rights created by patent grant or registration of a utility model or design patent are reserved.

43.15.2.1.2.2.3.2.1.1 Calculation of duty-cycle for VCV holding phase

It has to be noted that the parameters PWM_VCV_CTL_0 and PWM_VCV_CTL_1 are merged, since SL feature is not available in currentless close type VCV.

When the VCV operating state is at MFP_MAX (maximum delivery) or at MFP_START (engine start phase) with fuel pressure still below the setpoint, then maximum delivery mode is considered and no current feed is applied. The VCV opens by suction created inside the pump chamber and closes due to the spring force.
After the fuel pressure has achieved the setpoint, then the delivery is restricted to avoid too high rail pressure build up through the calibration, IP_PWM_VCV_CTL_PULSE_ST which is dependant on battery voltage.

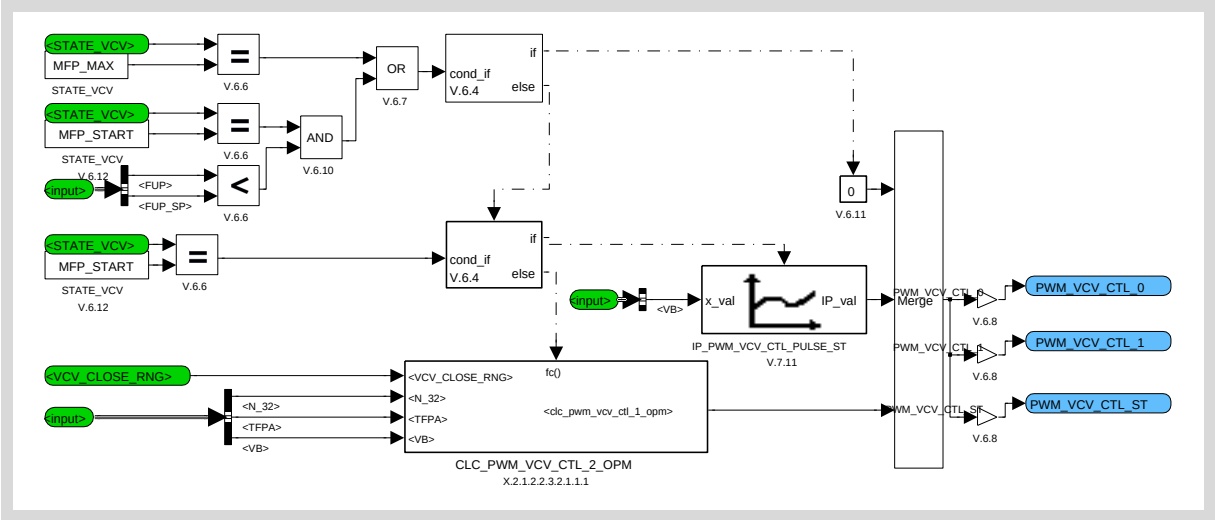

Figure 43.15.91:

43.15.2.1.2.2.3.2.1.1.1 Duty cycle for VCV holding phase during normal states

Under normal VCV operating states, the hold phase PWM duty cycle calculation is through,

IP_PWM_VCV_CTL_PULSE – base map dependant on battery voltage and engine speed.
IP_FAC_CLOSE_RNG_PWM_VCV_CTL – correction map dependant on VCV closing angle and engine speed.
IP_FAC_TFPA_PWM_VCV_CTL – correction map dependant on VCV coil temperature.

Copyright ©Continental AG. Transmittal, reproduction, dissemination and/or editing of this document as well as utilisation of its contents and communication thereof to others without expressed authorisation are prohibited. Offenders will be held liable for payment of damages. All rights created by patent grant or registration of a utility model or design patent are reserved.

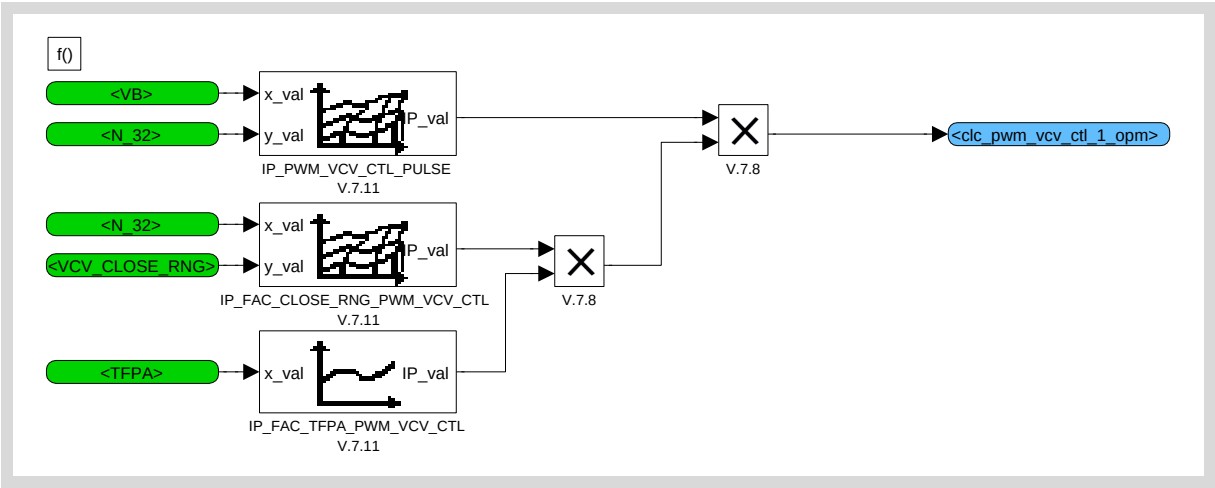

Figure 43.15.92:

43.15.2.1.2.2.4 Calculation of set point during open loop VCV current control

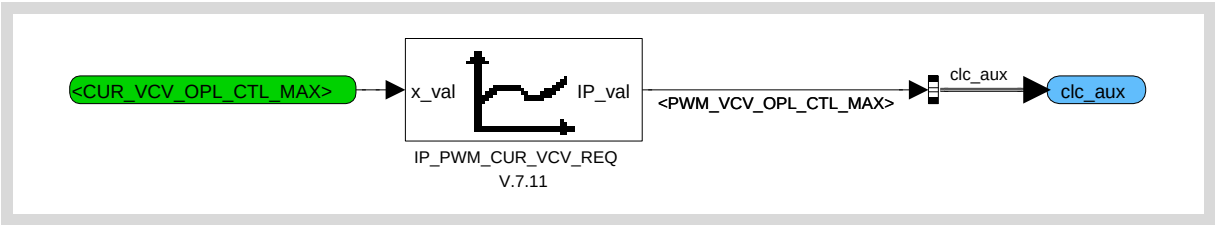

Figure 43.15.93:

43.15.2.1.2.2.5 Action call to handle the PWM calculations

The switching of all the relevant action calls for time based or segment based mode is done here. During start phase (MFP_START) or when the VCV inhibition is active, then the calculations are done in time based mode. In all other operating states, the calculations are done in segment based mode.

Copyright ©Continental AG. Transmittal, reproduction, dissemination and/or editing of this document as well as utilisation of its contents and communication thereof to others without expressed authorisation are prohibited. Offenders will be held liable for payment of damages. All rights created by patent grant or registration of a utility model or design patent are reserved.

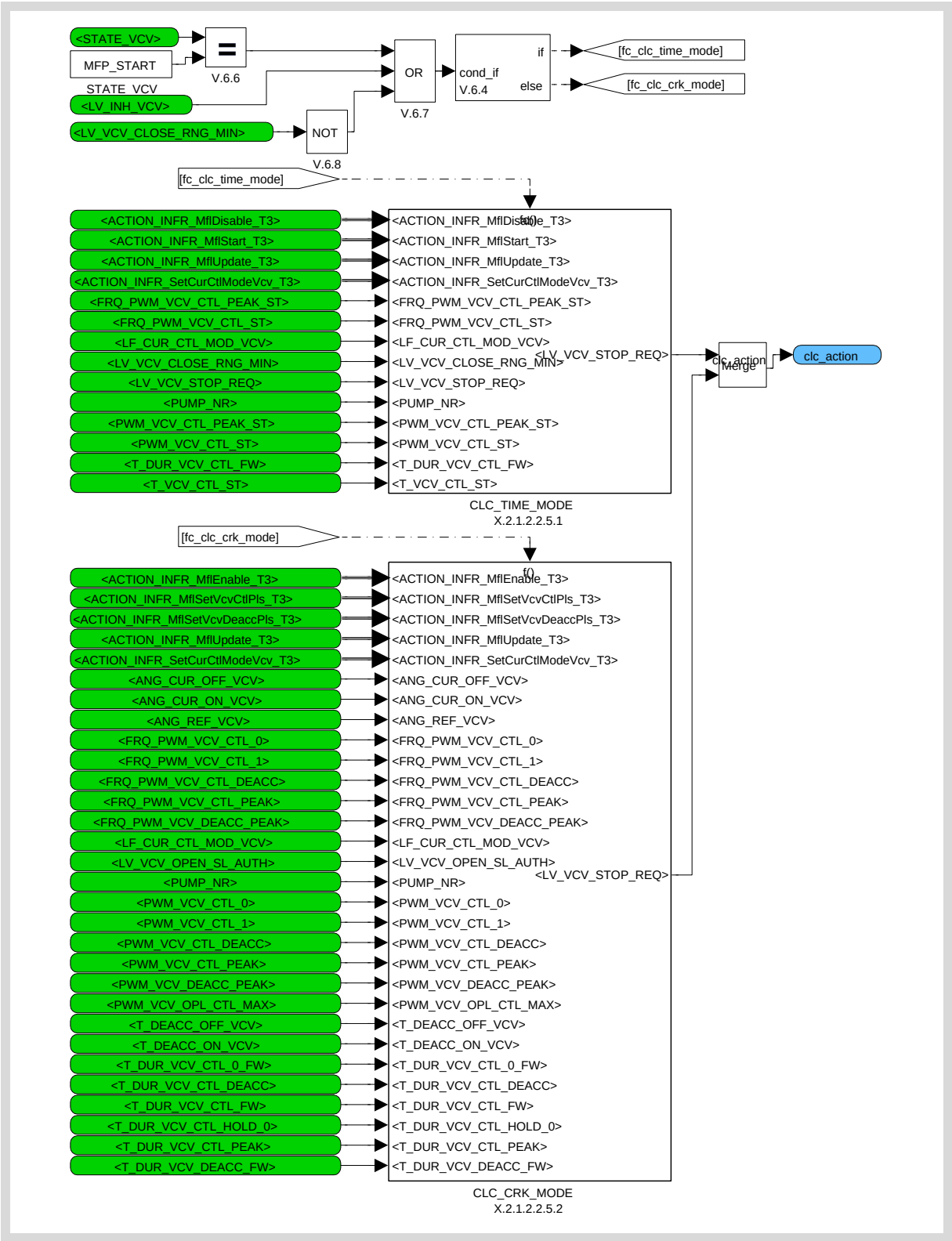

Figure 43.15.94:

Copyright ©Continental AG. Transmittal, reproduction, dissemination and/or editing of this document as well as utilisation of its contents and communication thereof to others without expressed authorisation are prohibited. Offenders will be held liable for payment of damages. All rights created by patent grant or registration of a utility model or design patent are reserved.

43.15.2.1.2.2.5.1 Action to Disable and Start

Switch to time based mode.

The VCV actuation is disabled when the PWM duty cycle value for hold phase is set to zero or when the VCV stop request flag is active.
C_T_DUR_VCV_CTL_ST is the calibration constant through which the pull-in time for currentless closed type VCV is given.
C_T_DUR_MAX is the calibration constant which gives the maximum pulse duration that can be applied at once during any operation.

Every time there is an entry or exit from time based or segment based mode and vice-versa, then the VCV stop request flag is reset. This is to ensure that the BSW is reset at every entry and exit of both modes, this ensures there is no loss of actuation pulses during transition and to make the BSW robust.

Copyright ©Continental AG. Transmittal, reproduction, dissemination and/or editing of this document as well as utilisation of its contents and communication thereof to others without expressed authorisation are prohibited. Offenders will be held liable for payment of damages. All rights created by patent grant or registration of a utility model or design patent are reserved.

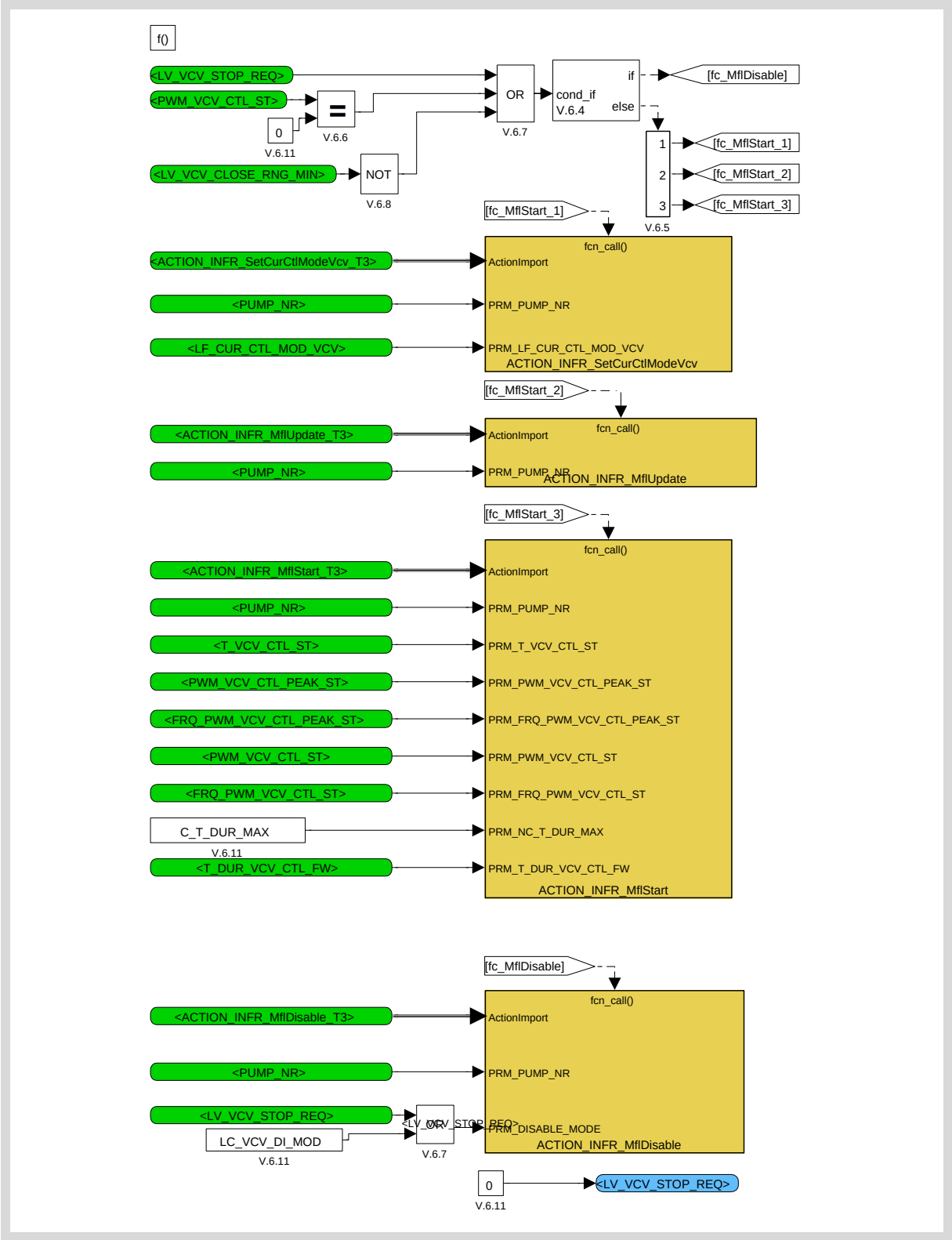

Figure 43.15.95:

Copyright ©Continental AG. Transmittal, reproduction, dissemination and/or editing of this document as well as utilisation of its contents and communication thereof to others without expressed authorisation are prohibited. Offenders will be held liable for payment of damages. All rights created by patent grant or registration of a utility model or design patent are reserved.

43.15.2.1.2.2.5.2 Action to Enable and Update

Switch to crank based mode.

43.15.2.1.3 Calculation Section for Actuator Test (Overview)

Start cycle is applied to the VCV when the actuator test is active.
The pull-in time is given through the calibration constant, C_T_DUR_VCV_CTL_ST. It is corrected by battery voltage dependant correction through the calibration, IP_FAC_VB_T_DUR_VCV_CTL.
The maximum pulse duration that can be applied at once is given through the calibration constant, C_T_DUR_MAX.
The free wheel time is given through the calibration constant, C_T_DUR_VCV_CTL_FW.

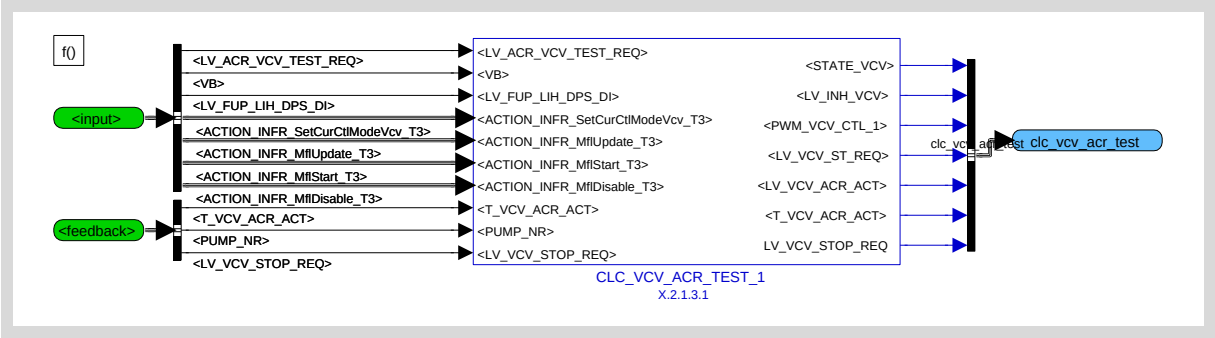

Figure 43.15.96:

43.15.2.1.3.1 Calculation Section for Actuator Test (details)

43.15.2.1.3.1.1 Switching between actuator test mode and VCV_OPEN mode

The default state of VCV is VCV_OPEN mode. If the actuator test is inactive, then the VCV stays in open mode.

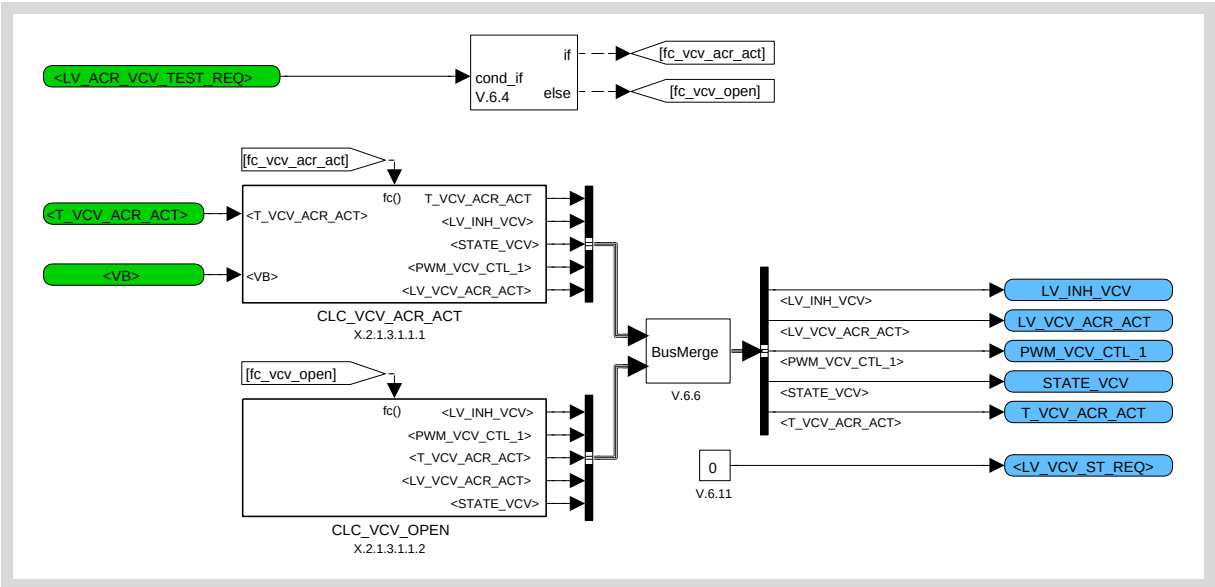

Figure 43.15.97:

Copyright ©Continental AG. Transmittal, reproduction, dissemination and/or editing of this document as well as utilisation of its contents and communication thereof to others without expressed authorisation are prohibited. Offenders will be held liable for payment of damages. All rights created by patent grant or registration of a utility model or design patent are reserved.

43.15.2.1.3.1.1.1 Calculation of actuator test mode

During active actuator test mode (LV_ACR_VCV_TEST_REQ = 1) actuating frequency, duration and duty cycle for VCV actuation can be applied.
Pulses with a frequency of 1 second period are applied. The duration of active current feed inside this period is the calibratable time of C_T_VCV_ACR_ACT.
The duty cycle can be applied through the calibration map dependant on current battery voltage, IP_PWM_VCV_CTL_PULSE_ST.

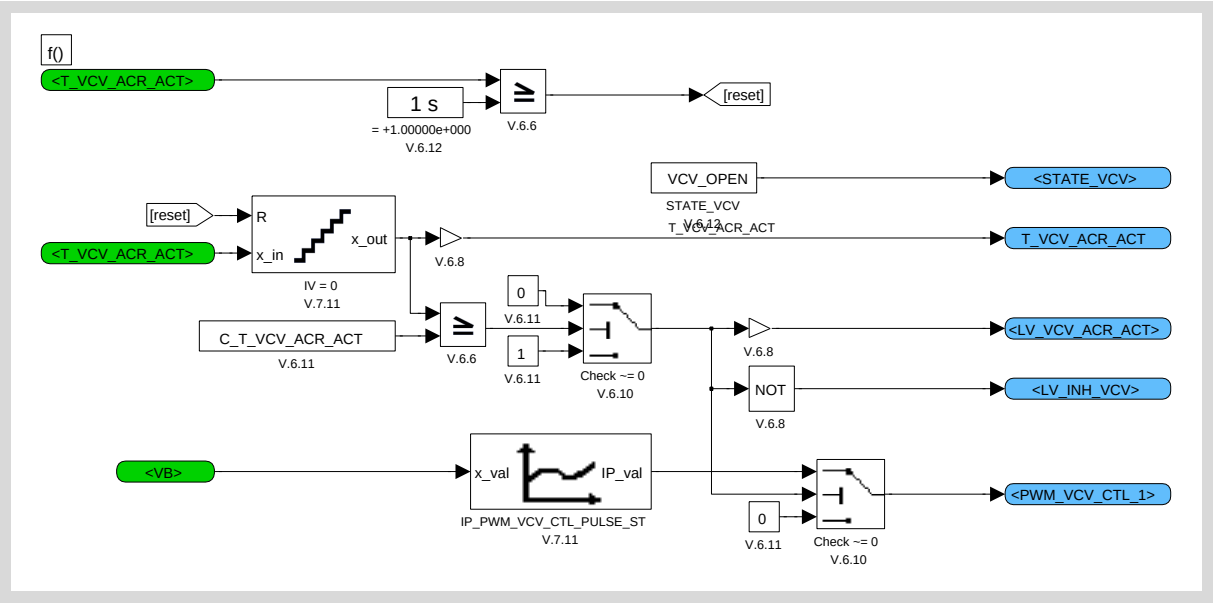

Figure 43.15.98:

43.15.2.1.3.1.1.2 Calculation of VCV_OPEN mode

Reset of parameters in VCV_OPEN mode.

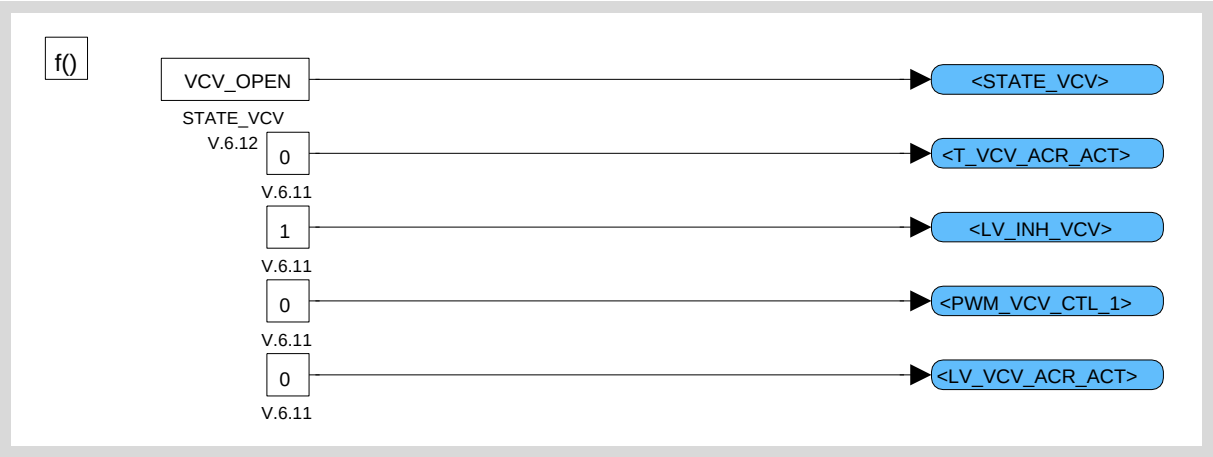

Figure 43.15.99:

Copyright ©Continental AG. Transmittal, reproduction, dissemination and/or editing of this document as well as utilisation of its contents and communication thereof to others without expressed authorisation are prohibited. Offenders will be held liable for payment of damages. All rights created by patent grant or registration of a utility model or design patent are reserved.

43.15.2.2 Component protection timer calculation

This calculation occurs at 10ms. The start timer is calculated here. It prevents overheating of the VCV during start phase.

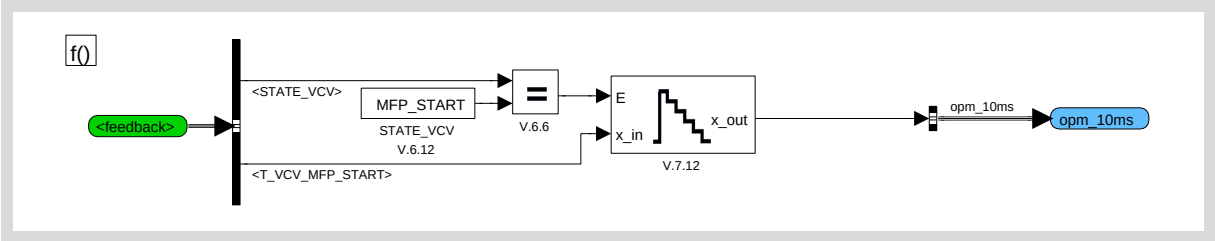

Figure 43.15.100:

43.15.2.3 Calculation of adaptation timer with 1s recurrence

The SL timer for adaptation validity runs in this subsystem. It triggers the periodic re-adaptation cycle.

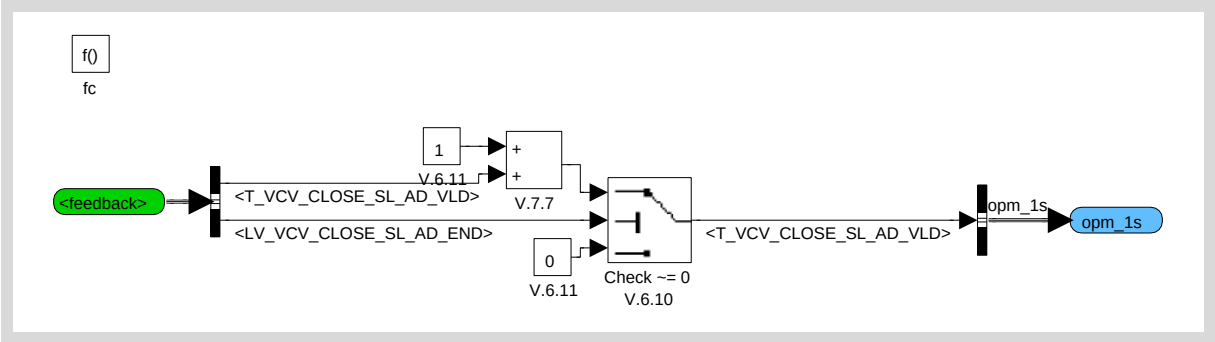

Figure 43.15.101:

Copyright ©Continental AG. Transmittal, reproduction, dissemination and/or editing of this document as well as utilisation of its contents and communication thereof to others without expressed authorisation are prohibited. Offenders will be held liable for payment of damages. All rights created by patent grant or registration of a utility model or design patent are reserved.

43.16 Fuel pressure actuator control (Appl. Inc.)

▶ Data Definition

Name	Mode	Coded Limits	Display Limits	Resolution	Unit
CAM_FUEL_PUMP	O/V	0... 780H	0... 720	0.375	°CRK
Cam angle of the camshaft where the fuel pump is mounted on					
CAM_NR_CBK	V	0... 1H	0 ...1	1	-
Camshaft number dependent on cylinder bank position					
CAM_NR_GES	V	0... 1H	0 ...1	1	-
Camshaft number dependent on gas exchange side position					
LV_VCV_OPEN_EXT_REQ	O/V	0... 1H	0 ...1	1	-
External request to open the volume control valve					
STATE_CAM_CBK_HPP	V	0H 1H 2H 3H	CAM_IN_1 CAM_IN_2 CAM_EX_1 CAM_EX_2	-	-
State describing position of mounted high pressure pump on camshaft					

▶ Input Data

LV_ES {p. 7530}	NC_NR_CAM_CBK {p. 8006}	PSN_CAM_EX [NC_NR_CAM_CBK_MAX] {p. 8097}	PSN_CAM_IN [NC_NR_CAM_CBK_MAX] {p. 8097}

▶ Calibration Data

Name	Mode	Coded Limits	Display Limits	Resolution	Unit
C_OFS_CAM_REF_VCV	V	FC40... 3C0H	-360 ...360	0.375	°CRK
Camshaft offset for VCV reference system					
C_STATE_CAM_CBK_HPP	V	0H 1H 2H 3H	CAM_IN_1 CAM_IN_2 CAM_EX_1 CAM_EX_2	-	-
State to describe position of mounted high pressure pump on camshaft					

▶ General Information

The flow controlled high pressure pump is mounted on a camshaft. The output variable CAM_FUEL_PUMP shows the maximum opening point of selected camshaft profile in relation to TDC (top death center) Cyl.-0 (see IVVT variable CAM_ENG).

The limp home activation of the high pressure pump is done by the activation bit calculated within this function.

.

▶ Application Conditions

Initialisation: RST

Copyright ©Continental AG. Transmittal, reproduction, dissemination and/or editing of this document as well as utilisation of its contents and communication thereof to others without expressed authorisation are prohibited. Offenders will be held liable for payment of damages. All rights created by patent grant or registration of a utility model or design patent are reserved.

Activation: `LV_ES==0`

Deactivation: `LV_ES==1`

Recurrence: `SEG`

Function Description

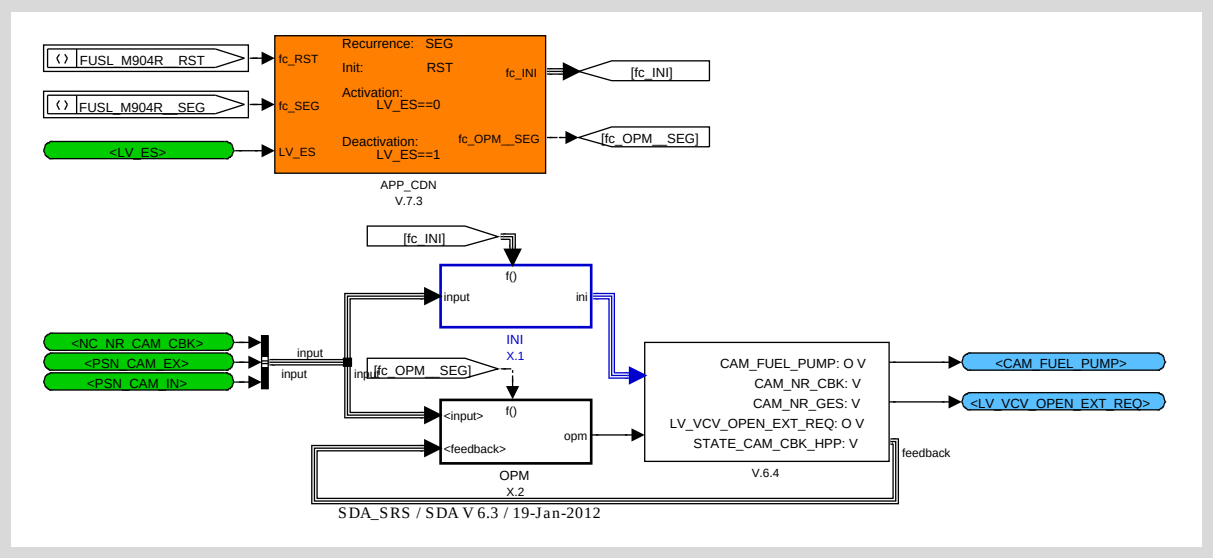

Figure 43.16.1:

43.16.1 Initialization

43.16.1.1 Calculation of Initialization

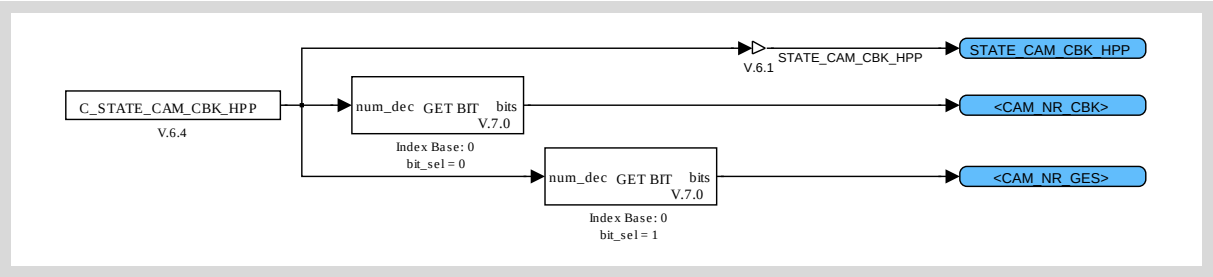

Figure 43.16.2: Determination of high pressure pump position on camshaft

Copyright ©Continental AG. Transmittal, reproduction, dissemination and/or editing of this document as well as utilisation of its contents and communication thereof to others without expressed authorisation are prohibited. Offenders will be held liable for payment of damages. All rights created by patent grant or registration of a utility model or design patent are reserved.

43.16.1.2 Initialization of the reference angle for the single piston pump

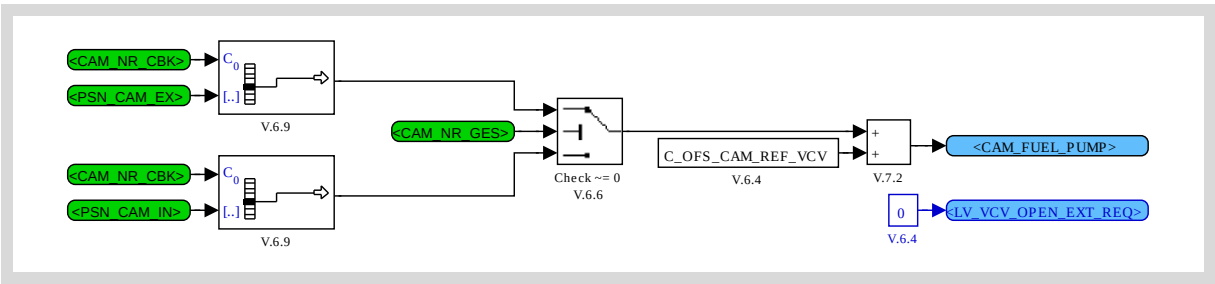

Figure 43.16.3:

43.16.2 Calculation sequence

The function is split into the calculation of the reference angle for the single piston pump and the limp home activation calculation.

43.16.2.1 Calculation of the reference angle for the single piston pump

The reference angle for the single piston pump is taken from the camshaft position acquistion.

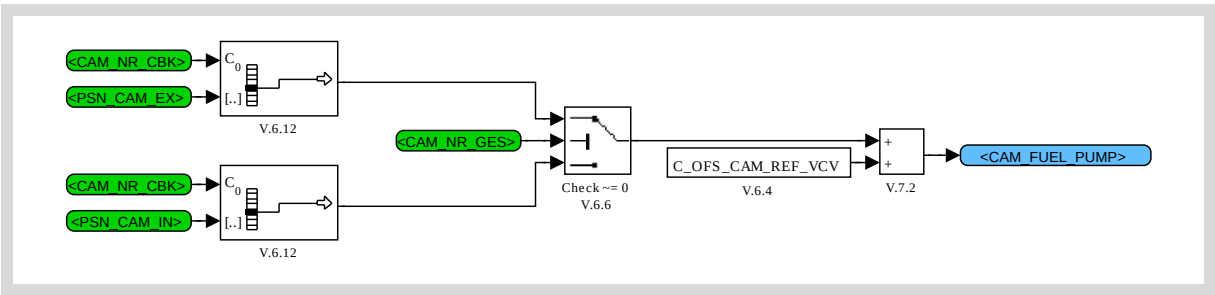

Figure 43.16.4:

Copyright ©Continental AG. Transmittal, reproduction, dissemination and/or editing of this document as well as utilisation of its contents and communication thereof to others without expressed authorisation are prohibited. Offenders will be held liable for payment of damages. All rights created by patent grant or registration of a utility model or design patent are reserved.

43.17 Fuel supply system temperatures

Data Definition

Name	Mode	Coded Limits	Display Limits	Resolution	Unit
TFPA	O/V	0... FFH	-50 ...205	1	°C
Fuel pressure actuator temperature					
TFPA_DIF	V	0... FFFFH	-50 ...205	0.00389105	°C
Final temperature difference to temperature of fuel pressure actuator					
TFPA_EL	V	0... FFFFH	-50 ...205	0.00389105	°C
Electrical temperature difference					
TFPA_ENG	V	0... FFFFH	-50 ...205	0.00389105	°C
Temperature difference dependent to engine heating effects					
TFPA_FUEL	V	0... FFFFH	-50 ...205	0.00389105	°C
Temperature difference depnendent to fuel heating effects					
TFPA_H	V	0... FFFFFFFFH	-50 ...205	59.3718e-9	°C
Fuel pressure actuator temperature in high resolution					

Input Data

LV_VAR_HPP {p. 24791}	N_32 {p. 8079}	STATE_VCV {p. 11985}	TCO {p. 8846}
TFU_HPP {p. 11817}	TIA {p. 1143}	VFF_HPP {p. 11815}	VS {p. 26240}

Calibration Data

Name	Mode	Coded Limits	Display Limits	Resolution	Unit
C_CRLC_TFPA_H	-	0... FFFFH	0... 0.999984741211	15.2588e-6	-
Corellation constant for lowpass filtering for temperature of fuel pressure actuator					
C_TFPA_H_MAX	-	0... FFFFFFFFH	-50 ...205	59.3718e-9	°C
Maximum value of fuel pressure actuator temperature					
C_TFPA_H_MIN	-	0... FFFFFFFFH	-50 ...205	59.3718e-9	°C
Minimum value of fuel pressure actuator temperature					
IP_TFPA_EL_RATIO	-	0... FFFFH	-50 ...205	0.00389105	°C
LDP_N_32_TFPA_EL_RATIO	8	0... FFH	0... 8160	32	rpm
Conversion from ratio of fuel pressure actuator actuation pulses into electrical temperature difference					
IP_TFPA_ENG_AIR	-	0... FFFFH	-50 ...205	0.00389105	°C
LDPM_TFPA_TEMP_DIF	8	0... FFH	-96... 95.25	0.75	°C
LDP_VS_TFPA_ENG_AIR	6	0... FFH	0... 255	1	km/h
TFPA temperature difference dependent to airflow around fuel pressure actuator					
IP_TFPA_ENG_HEAT	-	0... FFFFH	-50 ...205	0.00389105	°C
LDPM_TFPA_TEMP_DIF	8	0... FFH	-96... 95.25	0.75	°C
TFPA temperature difference dependent to engine heatflow to fuel pressure actuator					
IP_TFPA_FUEL	-	0... FFFFH	-50 ...205	0.00389105	°C
LDPM_TFPA_TEMP_DIF	8	0... FFH	-96... 95.25	0.75	°C
LDP_VFF_HPP_TFPA_FUEL	6	0... FFFFH	0... 17179.60704	0.262144	ml/min

Copyright ©Continental AG. Transmittal, reproduction, dissemination and/or editing of this document as well as utilisation of its contents and communication thereof to others without expressed authorisation are prohibited. Offenders will be held liable for payment of damages. All rights created by patent grant or registration of a utility model or design patent are reserved.

Name	Mode	Coded Limits	Display Limits	Resolution	Unit
TFPA temperature difference dependent to fuel flow heating effects					

General Information

This module describes all functionalities to estimate temperatures of components in the fuel supply system. Following temperatures are determined:

- TFPA:
Coil temperature of fuel pressure actuator (for single piston high pressure pumps with ON-/OFF-valve for fuel volume control). The temperature model for estimation of TFPA works with following physical principles / main effects:

1.) Coil self heating due to heat origination caused by electric current feed of coil resistance.
2.) Heat dissipation from engine caused by mounting of high pressure fuel pump to engine block and airflow around fuel pressure actuator.
3.) Heat dissipation from fuel through the high pressure fuel pump caused by fuel flow from tank.

For every of these effects a temperature difference dependent to quantity and/or quality is calculated after the principle of a heat exchanger. The quality is dependent to temperature difference between coil temperature of fuel pressure actuator and environmental temperature (such as ambient, fuel temperature). The quantity is dependent to intensity of mass throughput (such as engine speed, fuel volume flow through the high pressure pump).

Application Conditions

Initialisation: `RST`

Activation: `always`

Deactivation: `never`

Recurrence: `1S`

Function Description

Copyright ©Continental AG. Transmittal, reproduction, dissemination and/or editing of this document as well as utilisation of its contents and communication thereof to others without expressed authorisation are prohibited. Offenders will be held liable for payment of damages. All rights created by patent grant or registration of a utility model or design patent are reserved.

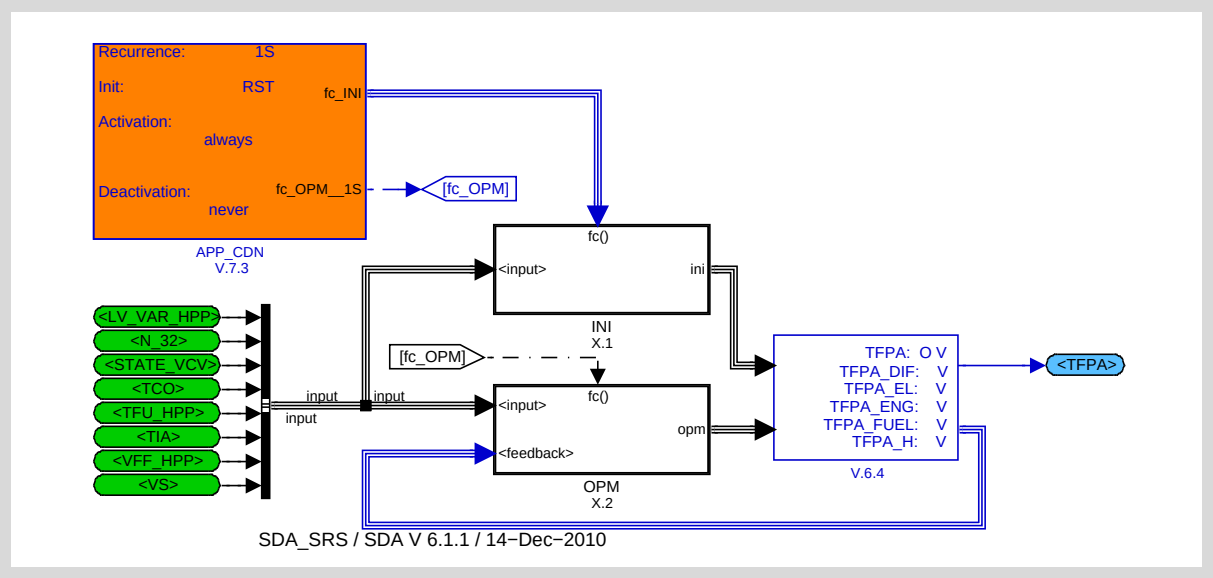

Figure 43.17.1:

43.17.1 Initialization at ECU reset

After long engine shut off periods, TFPA is initialized with temperature of coolant water (TCO).

43.17.2 Calculation of coil temperature of fuel pressure actuator (TFPA)

The temperature difference is added to current value of coil temperature of fuel pressure actuator. This value is filtered, limited and split into a high (for internal calculation) and low (for output variable) resolution value.

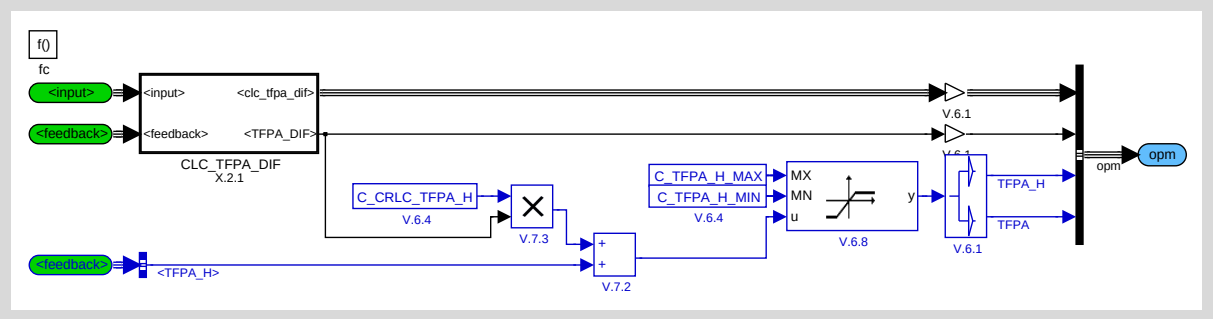

Figure 43.17.2:

43.17.2.1 Calculation of temperature difference

Calculation of temperature difference of fuel pressure actuator (TFPA_DIF) is split into calculation of temperature differences for electric coil self heating (TFPA_EL), effects from engine heat dissipation (TFPA_ENG) and effects from fuel heat dissipation (TFPA_FUEL).

The temperature differences are added to sum of temperature difference value.

Copyright ©Continental AG. Transmittal, reproduction, dissemination and/or editing of this document as well as utilisation of its contents and communication thereof to others without expressed authorisation are prohibited. Offenders will be held liable for payment of damages. All rights created by patent grant or registration of a utility model or design patent are reserved.

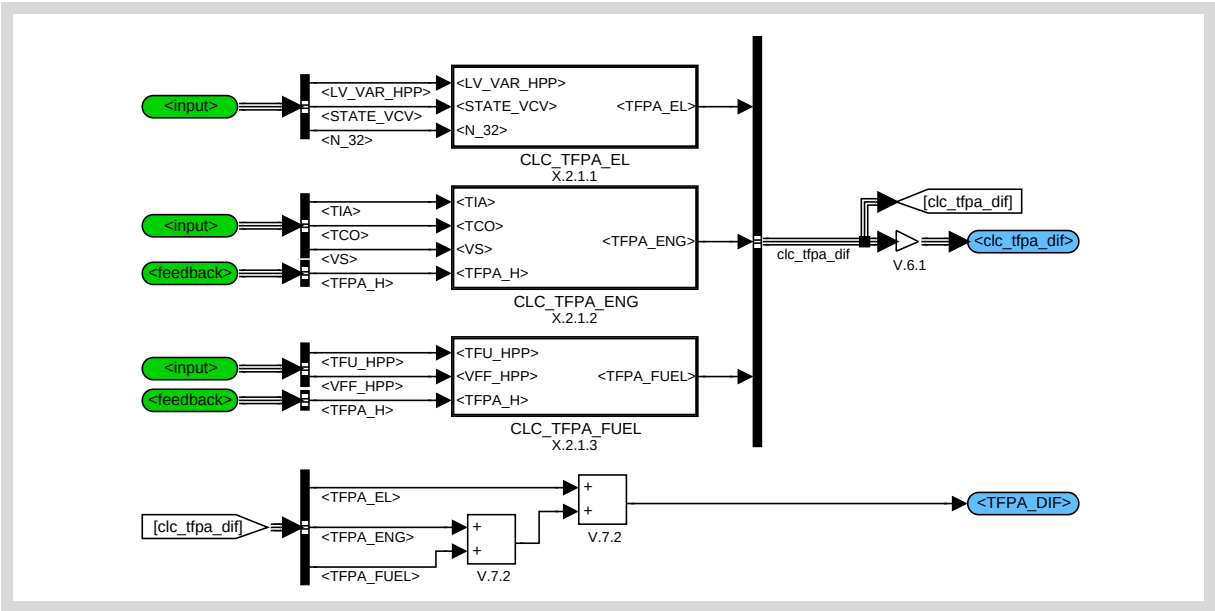

Figure 43.17.3:

43.17.2.1.1 Calculation of temperature difference for electric coil heating

The temperature difference for electric coil heating (TFPA_EL) is dependent to number of actuation cycles between two calculations of TFPA_EL. This number is represented by engine speed. The electrical effect allows only heat dissipation into actuator coil, no electrical cooling effects are possible.

In case of current feed shut off, the temperature difference is set to zero. Current feed shut off detection is realized by current actuation state of fuel pressure actuator dependent to used variant of high pressure pump.

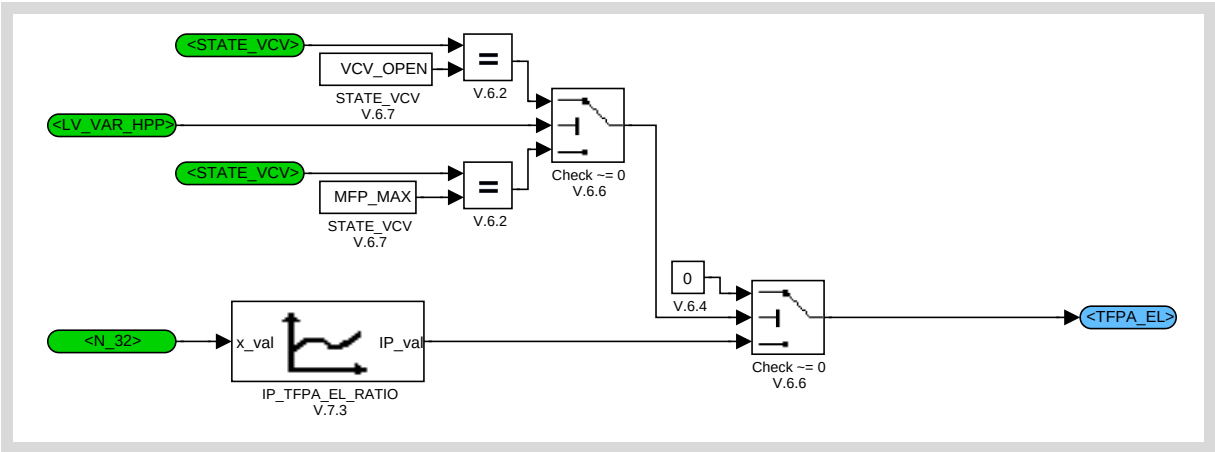

Figure 43.17.4:

Copyright ©Continental AG. Transmittal, reproduction, dissemination and/or editing of this document as well as utilisation of its contents and communication thereof to others without expressed authorisation are prohibited. Offenders will be held liable for payment of damages. All rights created by patent grant or registration of a utility model or design patent are reserved.

43.17.2.1.2 Calculation of temperature difference from engine heat dissipation

The temperature difference from engine heat dissipation is calculated with the effects of heat dissipation caused by mounting between engine and high pressure pump and airflow around fuel pressure actuator.

The temperature difference dependent to airflow is calculated with temperature difference between ambient and actuator temperature (quality information) and engine speed (quantity information).

Due to no real mass flow caused by heat dissipation from engine block, the temperature difference dependent to engine heatflow is calculated with temperature difference between coolant water (equals temperature of engine block) and actuator temperature.

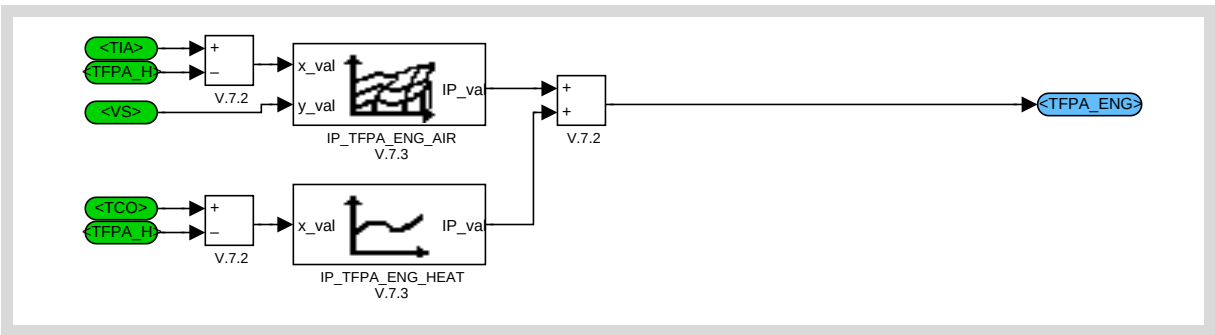

Figure 43.17.5:

43.17.2.1.3 Calculation of temperature difference from fuel heat dissipation

The temperature difference from fuel heat dissipation is calculated with the effects of heat dissipation caused by fuel flow through the high pressure pump.

The temperature difference dependent to fuelflow is calculated with temperature difference between fuel and actuator temperature (quality information) and volume fuel flow through high pressure pump (quantity information).

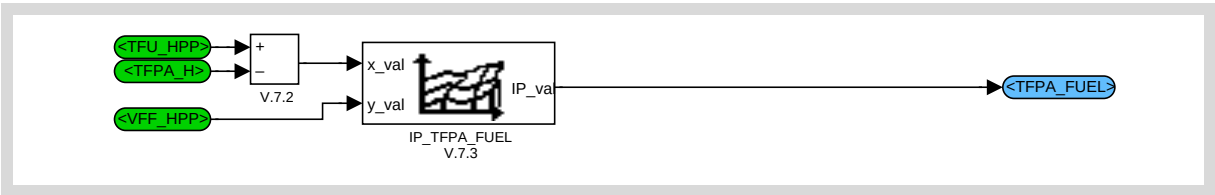

Figure 43.17.6:

Copyright ©Continental AG. Transmittal, reproduction, dissemination and/or editing of this document as well as utilisation of its contents and communication thereof to others without expressed authorisation are prohibited. Offenders will be held liable for payment of damages. All rights created by patent grant or registration of a utility model or design patent are reserved.

43.18 Fuel pump low pressure control coordination

▶ Data Definition

Name	Mode	Coded Limits	Display Limits	Resolution	Unit
anzhrdynaw	O/V	0... FFH	0... 255	1	-
Anzahl Ereignisse Hochdruckregler mit unzulässig hohen Werten oder Dynamik außerhalb des Wobbelns					
B_aekpsh	V	0... 1H	0 ...1	1	-
Bed. Anforderung EKP durch Standheizung für Druckaufbau					
B_aekpsh15	V	0... 1H	0 ...1	1	-
Bed. Anforderung EKP für Standheizung während KL15 ein					
B_aekptk	O/V	0... 1H	0 ...1	1	-
Bed. Anforderung EKP durch Türkontakt für Druckaufbau					
B_bkspae	V	0... 1H	0 ...1	1	-
Bed. Niederdruckkraftstoffsystem Druckabfall erkannt					
B_bksspa	O/V	0... 1H	0 ...1	1	-
Bed. Saugstrahlpumpenanforderung in der BKS					
B_btsbksn	V	0... 1H	0 ...1	1	-
Bed. Bauteilschutz für Niederdruckkraftstoffsystem notwendig					
B_dbvhdof	V	0... 1H	0 ...1	1	-
Bed. BDV im HD-Rail ist geöffnet					
B_dhbks	O/V	0... 1H	0 ...1	1	-
Bedingung Druckhaltefunktion aktiv					
B_dsbks	V	0... 1H	0 ...1	1	-
Bed, unzulässig hohe Druckspitze im Niederdruckkraftstoffsystem					
B_dsbksset	V	0... 1H	0 ...1	1	-
Bed. unzulässig hohe Druckspitze gesetzt					
B_ebks	O/V	0... 1H	0 ...1	1	-
Bed. BKS relevanter Fehler					
B_edbks	O/V	0... 1H	0 ...1	1	-
Wakeup-relevanter Fehler					
B_efahr	O/V	0... 1H	0 ...1	1	-
Bedingung E-Fahrbetrieb aktiv					
B_ekpdh	O/V	0... 1H	0 ...1	1	-
Bedingung Niederdruck wird gehalten					
B_ekpoksa	O/V	0... 1H	0 ...1	1	-
Bed. EKP aus Sicherheitsgründen abstellen weil Kraftstoffschlauch abgerissen					
B_ekpoksaa	V	0... 1H	0 ...1	1	-
Bed. EKP aus Sicherheitsgründen abstellen weil Kraftstoffschlauch abgerissen Anforderung					
B_ekponbks	O/V	0... 1H	0 ...1	1	-
Bed. EKP eingeschaltet					
B_ekposfr	V	0... 1H	0 ...1	1	-
Bed. EKP off aus Sicherheitsgründen prinzipiell freigegeben					
B_ekpshg	O/V	0... 1H	0 ...1	1	-
Bed. EKP ist aufgrund einer Anforderung der Standheizung im Predrive gelaufen					
B_ekpstbks	V	0... 1H	0 ...1	1	-
Bed. Anforderung EKP im Startbetrieb					
B_epdekp	V	0... 1H	0 ...1	1	-

Copyright ©Continental AG. Transmittal, reproduction, dissemination and/or editing of this document as well as utilisation of its contents and communication thereof to others without expressed authorisation are prohibited. Offenders will be held liable for payment of damages. All rights created by patent grant or registration of a utility model or design patent are reserved.

Name	Mode	Coded Limits	Display Limits	Resolution	Unit
Bed. Error im Predrive EKP					
B_erdbksy	O/V	0... 1H	0 ...1	1	-
Bedingung Fehler im Drucksensor					
B_flafobks	O/V	0... 1H	0 ...1	1	-
Bed. flaf Wert wird noch mit Offset oflafbks berechnet					
B_hdctbks1	V	0... 1H	0 ...1	1	-
Bedingung für Freigabe der Überwachung 1 des Hochdruckreglers					
B_hdctbks2	V	0... 1H	0 ...1	1	-
Bedingung für Freigabe der Überwachung 2 des Hochdruckreglers					
B_hrdynaw	O/V	0... 1H	0 ...1	1	-
Dynamik im Hochdruckregler außerhalb wobbeln					
B_htg	V	0... 1H	0 ...1	1	-
Bedingung Standheizungsanforderung bei Klemme15=ein					
B_nll	V	0... 1H	0 ...1	1	-
Nachlauf locked					
B_pbksprof	O/V	0... 1H	0 ...1	1	-
Bed. Offset für Solldruck BKS aufgrund von Hochdruckregelabweichung freigegeben					
B_pddiswuc	O/V/S	0... 1H	0 ...1	1	-
Bed. Predrive disabled bis zum nächsten warm up cycle					
B_pdekp	O/V	0... 1H	0 ...1	1	-
Anforderung von EKP Ansteuerung im Pre-/Postdrive					
B_pdekpha	V	0... 1H	0 ...1	1	-
Bed. Predrive EKP hydraulisch angefordert					
B_pksbksrg	V	0... 1H	0 ...1	1	-
Niederdruck-Istwert zu gering					
B_prdiffcw	V	0... 1H	0 ...1	1	-
HD-Reglerabweichung in Rail 2 zu hoch (über CAN)					
B_prdiffw	V	0... 1H	0 ...1	1	-
HD-Reglerabweichung zu hoch					
B_rqtbksvld	V	0... 1H	0 ...1	1	-
Plausibilisierte Stellgliedtestanforderung					
B_shaoekp	V	0... 1H	0 ...1	1	-
Bed. Standheizungsanforderung für die EKP zurückgenommen					
B_shtmp100	V	0... 1H	0 ...1	1	-
Bedingung Standheizungsanforderung temporärer Speicher für Handshake-Bit auf CAN					
B_shtmppredrv	V	0... 1H	0 ...1	1	-
Bedingung Standheizungsanforderung im Predrive temporärer Speicher für Handshake-Bit auf CAN					
B_sshev	O/V	0... 1H	0 ...1	1	-
Bedingung Start/Stopp- oder Hybrid-Funktionalitaet vorhanden					
B_switchbks	O/V	0... 1H	0 ...1	1	-
Bedingung Niederdrucksensor vorhanden (true: geregelte Niederdruckadaption, false: gesteuerte Adaption über Wobbeln)					
B_tekpoftk	V	0... 1H	0 ...1	1	-
Bed. Zeit EKP ausschalten Druckgrenze erreicht bei Anforderung Türkontakt					
B_tekpozsh	V	0... 1H	0 ...1	1	-
Bed. Zeit EKP ausschalten maximale Zeitgrenze erreicht bei Anforderung Standheizung					
B_tekpoztk	V	0... 1H	0 ...1	1	-

Copyright ©Continental AG. Transmittal, reproduction, dissemination and/or editing of this document as well as utilisation of its contents and communication thereof to others without expressed authorisation are prohibited. Offenders will be held liable for payment of damages. All rights created by patent grant or registration of a utility model or design patent are reserved.

Name	Mode	Coded Limits	Display Limits	Resolution	Unit
Bed. Zeit EKP ausschalten maximale Zeitgrenze erreicht bei Anforderung Türkontakt					
B_tgsabks	V	0... 1H	0 ...1	1	-
Bed. Zeit tkl15bks größer TGSABKS					
B_timeondh	V	0... 1H	0 ...1	1	-
Bedingung Druckhaltefunktion im Zeitintervall "Druckhalten aktiv"					
B_vrhdrbks	V	0... 1H	0 ...1	1	-
Bedingung Hochdruckregler hat unzulässig hohe Werte bzw. Dynamik					
fefahr_w	V	0... FFH	0... 1.9921875	0.0078125	-
Faktor fuer PWM-Gewichtung im E-Fahrbetrieb oder bei Druckhalten					
flafabks_w	V	0... FFFFH	0... 99.99847412109	0.00152588	%
Förderleistungsanforderung schubabschaltungskorrigiert					
flafcbks_w	V	0... FFFFH	0... 99.99847412109	0.00152588	%
Förderleistungsanforderung unter Berücksichtigung von Stellgliedtestsanforderung					
flafdhbks_w	V	0... FFFFH	0... 99.99847412109	0.00152588	%
Förderleistungsanforderung nach Druckhaltekorrektur					
flafebks_w	V	0... FFFFH	0... 99.99847412109	0.00152588	%
Förderleistungsanforderung EKP Fehlerfall-korrigiert					
flafefahr_w	V	0... FFFFH	0... 99.99847412109	0.00152588	%
PWM-Wert nach E-Fahrkorrektur					
flafhbks_w	V	0... FFFFH	0... 99.99847412109	0.00152588	%
Förderleistungsanforderung EKP während Standheizungsanforderung bei KL15 ein					
flafobks_w	V	0... FFFFH	0... 99.99847412109	0.00152588	%
Förderleistungsanforderung EKP korrigiert mit Offset aufgrund von Hochdruckreglerdynamik					
flafpbks_w	V	0... FFFFH	0... 99.99847412109	0.00152588	%
Förderleistungsanforderung während Predrive und EKP Anforderung					
flafpbksy_w	V	0... FFFFH	0... 6553.5	0.1	kPa
KFFLAF-y axis in PreDrive mode					
flafrbks_w	O/V	0... FFFFH	0... 99.99847412109	0.00152588	%
PWM-Wert in Abh. von der Einspritzmenge (flafx_w) und dem berechneten Niederdruck-Sollwert (flafy_w)					
flafrbksy_w	V	0... FFFFH	0... 6553.5	0.1	kPa
KFFLAF-y axis in Normal Drive mode					
flafsbks_w	V	0... FFFFH	0... 99.99847412109	0.00152588	%
Förderleistungsanforderung startkorrigiert					
flafsuesbks_w	V	0... FFFFH	0... 99.99847412109	0.00152588	%
Förderleistungsanforderung Startüberschwinger korrigiert					
flaftbks_w	V	0... FFFFH	0... 99.99847412109	0.00152588	%

Copyright ©Continental AG. Transmittal, reproduction, dissemination and/or editing of this document as well as utilisation of its contents and communication thereof to others without expressed authorisation are prohibited. Offenders will be held liable for payment of damages. All rights created by patent grant or registration of a utility model or design patent are reserved.

Name	Mode	Coded Limits	Display Limits	Resolution	Unit
Förderleistungsanforderung temperaturkorrigiert					
flafubks_w	V	0... FFFFH	0... 99.99847412109	0.00152588	%
Förderleistungsanforderung spannungskorrigiert					
fsakbks	V	0... FFH	0... 1.9921875	0.0078125	-
Faktor Schubabschaltungskorrektur %BKS					
fttkbks	V	0... FFH	0... 1.9921875	0.0078125	-
Faktor zur Korrektur der Tankinnentemperatur					
fuskbks	V	0... FFH	0... 1.9921875	0.0078125	-
Faktor Startüberschwingerkorrektur BKS					
kfflafin_w	O/V	0... FFFFH	0... 15.624761581e3	0.23841858	g/min
variable Eingangsgrösse des Kennfelds KFFLAF (von %BKS)					
lepwmbks_w	O/V	0... FFFFH	0... 99.99847412109	0.00152588	%
Tastverhaeltnis Leistungsendstufe EKP					
LV_EFP_WKU	O/V	0... 1H	0 ...1	1	-
EFP wake up active					
oflafbks_w	V	0... FFFFH	0... 99.99847412109	0.00152588	%
Offset flaf EKP für den Fall Hochdruckreglerdynamik außerhalb wobbeln					
pbksinp_w	O/V	0... FFFFH	0... 6553.5	0.1	kPa
adaptierter und fehlerkorrigierter Niederdruck-Sollwert					
pbkssum_w	V	0... FFFFH	0... 6553.5	0.1	kPa
Druckanforderung BKS Summe aus Solldruck und Adaptionswert					
PspCtl_stFlPmpAct	O/V	0... FFH	0... 255	1	-
Ausgabewert für Handshake EKP <-> Standheizung (CAN)					
tkl15bks	V	0... FFFFH	0... 6553.5	0.1	s
Zeit seit Kl15=ein					
tnefahr_w	V	0... FFFFH	0... 1310.7	0.02	s
Zeit seit E-Fahrbetrieb oder Druckhalten aktiv					
tnsabte	V	0... FFH	0... 25.5	0.1	s
Zeit seit Schubabschaltungsbereitschaft gesetzt ist					
tpdbks_w	O/V	0... FFFFH	0... 6553.5	0.1	s
Zeit seit Predrivebeginn					
tvadbksp_w	V	0... FFFFH	0... 99.99847412109	0.00152588	%
PWM-Wert bei Standheizungsanforderung nach Kl15=ein					

Input Data

arqtbks_w {p. 11943}	AuxHtg_bFlPmpReq {p. 11943}	B_airbag {p. 11943}	B_ekp {p. 11943}
B_fstcanok {p. 11943}	B_gsch {p. 11943}	B_hdnd {p. 11943}	B_hoodopnok {p. 11943}
B_kl15 {p. 11943}	B_masterhw {p. 11943}	B_msvkma {p. 11943}	B_nmot {p. 11943}
B_rqtbks {p. 11943}	B_sa {p. 11943}	B_sabte {p. 11944}	B_stend {p. 11944}

Copyright ©Continental AG. Transmittal, reproduction, dissemination and/or editing of this document as well as utilisation of its contents and communication thereof to others without expressed authorisation are prohibited. Offenders will be held liable for payment of damages. All rights created by patent grant or registration of a utility model or design patent are reserved.

B_stendz {p. 11944}	B_tal {p. 11944}	B_tfstok {p. 11944}	B_tmbkser {p. 11844}
B_wbkse {p. 11918}	B_wuc {p. 11944}	BKS_SY {p. 11947}	dmkrhdef_w {p. 11918}
dmkrhdev_w {p. 11944}	dmkrmpi_w {p. 11944}	Dspl_bDrvDoorOpn {p. 11944}	Dspl_bHoodOpnNoDeb {p. 11944}
E_ebks {p. 11944}	E_edbks {p. 11944}	E_erdbksy {p. 11944}	LV_VAR_4WD {p. 24738}
nmot_w {p. 11944}	pbkist_w {p. 11944}	pbksadr_w {p. 11919}	pbksaw_w {p. 11919}
pbksollmod_w {p. 11919}	pksbksr_w {p. 11944}	prdiff_cw {p. 11944}	prdiff_w {p. 11945}
prist_w {p. 11945}	prsoll_cw {p. 11945}	prsoll_w {p. 11945}	prsollnd_w {p. 11945}
pu_w {p. 11945}	SY_HEV {p. 11947}	SY_SGANZ {p. 11947}	SY_STASTO {p. 11947}
tfst {p. 11945}	tktm {p. 11845}	tmst {p. 11945}	tnse_w {p. 11945}
top_w {p. 11945}	ubsq {p. 11945}	vdaavst_w {p. 11945}	vrhdr_w {p. 11946}
vrhdrf_w {p. 11919}			

Calibration Data

Name	Mode	Coded Limits	Display Limits	Resolution	Unit
ADBKSINI	V	8000... 7FFFH	-3276.8... 3.2767e3	0.1	kPa
Adaptionswert Iniwert BKS					
ANZVRDYNER	V	0... FFH	0... 255	1	-
In einem Zyklus max zulässige Anzahl Ereignisse Hochdruckregler mit unzulässig hohen Werten oder Dynamik außerhalb des Wobbelns für dauerhafte Umschaltung auf ein festen flaf Wert					
CWBKS	V	0... FFH	0... 255	1	-
Codewort für BKS					
CWBKS2	V	0... FFH	0... 255	1	-
Codewort 2 für BKS					
CWBKS3	V	0... FFH	0... 255	1	-
Codewort 3 für BKS					
CWBKS4	V	0... FFH	0... 255	1	-
Codewort 4 für BKS					
CWBKS5	V	0... FFH	0... 255	1	-
Codewort 5 für BKS					
CWBKSMPI	V	0... FH	0... 15	1	-
Codeword MPI modes (Bit0: Switching DI/MPI-mixed mode for BKS, Bit1: Switch for Wobbling during MPI-mode, Bit2..7 not used)					
CWPRDRV	V	0... FFH	0... 255	1	-
Codewort für BKS-Predrive					
CWPRDRVENA	V	0... FFH	0... 255	1	-
Codewort 2 für BKS-Predrive					
DFLAFOBKS	V	1... FFFFH	0.02... 1310.7	0.02	s

Copyright ©Continental AG. Transmittal, reproduction, dissemination and/or editing of this document as well as utilisation of its contents and communication thereof to others without expressed authorisation are prohibited. Offenders will be held liable for payment of damages. All rights created by patent grant or registration of a utility model or design patent are reserved.

Name	Mode	Coded Limits	Display Limits	Resolution	Unit
Integrationskonstante für Runterrampen des Fehler-PWM-Wertes sobald Hochdruckreglerdynamik zurückgenommen					
DMKRGWBKS	V	0... FFFFH	0... 15.624761581e3	0.23841858	g/min
Grenzwert für Dynamik im Kraftstoffmassenfluß für die Freigabe Überwachung des Hochdruckreglers außerhalb von Wobbeln					
FLAFDH	V	0... FFFFH	0... 99.99847412109	0.00152588	%
Foerderleistung im Zeitintervall mit aktivem Druckhalten					
FLAFDL	V	0... FFFFH	0... 99.99847412109	0.00152588	%
Foerderleistung im Warteintervall bei Druckhalten					
FLAFEBKS	V	0... FFFFH	0... 99.99847412109	0.00152588	%
Förderleistungsanforderung EKP im Fehlerfall					
KFFLAF	V	0... FFFFH	0... 99.99847412109	0.00152588	%
LDP_KFFLAF_x	8	0... FFFFH	0... 15.624761581e3	0.23841858	g/min
LDP_KFFLAF_y	7	0... FFFFH	0... 6553.5	0.1	kPa
PWM-Wert abh. von Einspritzmenge und Solldruck					
KFFLAF4	V	0... FFFFH	0... 99.99847412109	0.00152588	%
LDP_KFFLAF_x	8	0... FFFFH	0... 15.624761581e3	0.23841858	g/min
LDP_KFFLAF_y	7	0... FFFFH	0... 6553.5	0.1	kPa
PWM-Wert abh. von Einspritzmenge und Solldruck (4WD)					
KFFLAFSSP	V	0... FFFFH	0... 15.624761581e3	0.23841858	g/min
Schwelle Kraftstoffördermenge für Freigabe Saugstrahlpumpenanforderung					
KLEFAHR	V	0... FFH	0... 1.9921875	0.0078125	-
LDP_KLEFAHR_x	10	0... FFFFH	0... 1310.7	0.02	s
Kennlinie f. PWM-Gewichtungsfaktor im E-Fahrbetrieb oder Druckhalten					
KLPRDIFMX	V	0... FFFFH	-16.384 ...16.3835	0.0005	MPa
LDP_KLPRDIFMX_x	6	0... FFFFH	0... 32.7675	0.0005	MPa
oberer Grenzwert für prdiff_w zur Erkennung einer zu großen HDR-Abweichung					
KLSAKBKS	V	0... FFH	0... 1.9921875	0.0078125	-
LDP_KLSAKBKS_x	8	0... FFH	0... 25.5	0.1	s
Kennlinie Schubabschaltungs-korrektur BKS					
KLTTKBKS	V	0... FFH	0... 1.9921875	0.0078125	-
LDP_KLTTKBKS_x	10	0... FFH	-48... 143.25	0.75	°C
Kennlinie Tankinnentemperaturkorrektur					
KLUBLEMX	V	0... FFFFH	0... 99.99847412109	0.00152588	%
LDP_KLUBLEMX_x	4	0... FFH	0... 25.5	0.1	V
Kennlinie Begrenzung der max. Förderleistungsanforderung EKP in Abhängigkeit der Bordnetzspannung					
KLUBSTBKS	V	0... FFFFH	0... 99.99847412109	0.00152588	%
LDP_KLUBSTBKS_x	5	0... FFH	0... 25.5	0.1	V
Kennlinie Förderleistungsanforderung in % im Startbetrieb der EKP in Abghängigkeit von ub					
KLUSKBKS	V	0... FFH	0... 1.9921875	0.0078125	-
LDP_KLUSKBKS_x	8	0... FFFFH	0... 6553.5	0.1	s
Kennlinie Startüberschwingerkorrektur BKS					

Copyright ©Continental AG. Transmittal, reproduction, dissemination and/or editing of this document as well as utilisation of its contents and communication thereof to others without expressed authorisation are prohibited. Offenders will be held liable for payment of damages. All rights created by patent grant or registration of a utility model or design patent are reserved.

Name	Mode	Coded Limits	Display Limits	Resolution	Unit
LEPWMMN	V	0... FFFFH	0... 99.99847412109	0.00152588	%
minimales Tastverhältnis Eingang Leistungsendstufe					
LEPWMMX	V	0... FFFFH	0... 99.99847412109	0.00152588	%
maximales Tastverhaeltnis Eingang Leistungsendstufe					
LEPWMOFF	V	0... FFFFH	0... 99.99847412109	0.00152588	%
Tastverhältnis für Anforderung EKP=aus					
NMOTHDCGS	V	0... FFFFH	0... 16383.75	0.25	1/min
Drehzahlschwelle für die Ausblendung der HD Überwachung bei Schaltvorgang					
PBKSESA	V	0... FFFFH	0... 6553.5	0.1	kPa
Druck im Niederdruckkraftstoffsystem für Erkennung Schlauch abgerissen aufgrund von Druckspitze im Vorlauf					
PBKSSP	V	0... FFFFH	0... 6553.5	0.1	kPa
Druckanforderung EKP für sicheren Betrieb der Saugstrahlpumpe im Tank					
PEBKS	V	0... FFFFH	0... 6553.5	0.1	kPa
Ersatzwert Druck im Fehlerfall					
PGBDVHDO	V	0... FFFFH	0... 32.7675	0.0005	MPa
Grenzwert für Druck im Rail für BDV offen					
PGBTSBKS	-	0... FFFFH	0... 6553.5	0.1	kPa
Druckgrenze für Aktivierung Bauteilschutz im Niederdruckkraftstoffsystem					
PGSHBKS	V	0... FFFFH	0... 6553.5	0.1	kPa
Niederdrucksollwert für Standheizung					
PGZUENDBKS	V	0... FFFFH	0... 6553.5	0.1	kPa
Niederdruckgrenzwert für KI15 Vorbestromung					
POTKBKS	V	0... FFFFH	0... 6553.5	0.1	kPa
Niederdruckoffsetwert für Türkontaktvorbestromung					
PRDIFHYS	V	0... FFFFH	0... 32.7675	0.0005	MPa
Hysterese für prdiff für Erkennung Hochdruckregelabweichung zu groß					
PSPCTL_AUXHEATERRUN_BP	V	0... FFH	0... 255	1	-
Bitpattern für Ausgabewert der %BKS an CAN im Zustand unmittelbar nach aktiver EKP aufgrund Standheizungsanforderung					
PSPCTL_PSPACTIVE_BP	V	0... FFH	0... 255	1	-
Bitpattern für Ausgabewert der %BKS an CAN bei aktiver EKP aufgrund Standheizungsanforderung					
PWMINBKS	-	0... FFFFH	0... 99.99847412109	0.00152588	%
Initwert für lepwmbks_w					
TDBVOHD	V	0... FFH	0... 5.1	0.02	s
Entprellzeit für DBV offen					
TDHSET	V	0... FFFFH	0... 1310.7	0.02	s
Dauer für Druckhalten aktiv					
TDHWAIT	V	0... FFFFH	0... 1310.7	0.02	s
Zeit für Warteintervall bei Druckhalten					
TEKPAPDSH	V	0... FFFFH	0... 6553.5	0.1	s
Zeitgrenze für EKP aktiv im Predrive aufgrund von Standheizung					
TEKPAPDTK	V	0... FFFFH	0... 6553.5	0.1	s
Zeitgrenze für EKP aktiv im Predrive aufgrund von Türkontakt					
TEKPOFTK	V	0... FFH	0... 25.5	0.1	s

Copyright ©Continental AG. Transmittal, reproduction, dissemination and/or editing of this document as well as utilisation of its contents and communication thereof to others without expressed authorisation are prohibited. Offenders will be held liable for payment of damages. All rights created by patent grant or registration of a utility model or design patent are reserved.

Name	Mode	Coded Limits	Display Limits	Resolution	Unit
Zeit EKP ausschalten Druckgrenze erreicht bei Anforderung Türkontakt					
TEKPOZSH	V	0... FFFFH	0... 6553.5	0.1	s
Zeit EKP ausschalten maximale Zeitgrenze erreicht bei Anforderung Standheizung					
TEKPOZTK	V	0... FFH	0... 25.5	0.1	s
Zeit EKP ausschalten maximale Zeitgrenze erreicht bei Anforderung Türkontakt					
TEONEKPENA	V	0... FFFFFFFFH	0... 119.30464708e3	27.7778e-6	h
Zeit Motor an fuer Ansteuerung EKP enabled					
TEZSHPDEKP	V	0... FFFFH	0... 6553.5	0.1	s
Entprellzeit für Standheizungssignal für Predrive EKP					
TEZTKPDEKP	V	0... FFFFH	0... 6553.5	0.1	s
Entprellzeit für Türkontaktsignal für Predrive EKP					
TFSTHYSBKS	V	0... FFH	0... 255	1	l
Hysterese Tankfüllstand für Saugstrahlpumpen Anforderung in der BKS					
TFSTSP	V	0... FFH	0... 255	1	l
Tankfüllstand ab dem ein SSP Betrieb notwendig ist					
TGSABKS	V	0... FFH	0... 25.5	0.1	s
Zeit für Verlängerung EKP-Vorlauf nach KI15=ein					
TMSTBKSST	V	0... FFH	-48... 143.25	0.75	°C
Schwelle Motorstarttemperatur für die Anforderung EKP im Startbetrieb					
TNSEBKSOF	V	0... FFFFH	0... 6553.5	0.1	s
Wartezeit nach Startende bis Hochdruckdynamiküberwachung auf Niederdruckseite wieder freigegeben wird					
TPDBKSMKZ	V	0... FFFFH	0... 6553.5	0.1	s
Mindestzeit die die Funktion %BKS Kommunikationsbedarf an das Netzwerkmanagement hat und daher den Predrive aktiv hält					
TSTARTEKP	V	0... FFFFH	0... 1310.7	0.02	s
Zeit nach Startende für Anforderung Startbetrieb EKP in der %BKS					
TVOBKS	V	0... FFFFH	0... 99.99847412109	0.00152588	%
Tastverhältnis für Anforderung EKP=aus					
TWEBKSDAE	V	0... FFH	0... 5.1	0.02	s
Zeit zur Entprellung Druckabfall in der BKS erkannt (für Test auf gerissenen Kraftstoffschlauch)					
TWKSABKS	V	0... FFFFH	0... 1310.7	0.02	s
Wartezeit auf abgerissenen Kraftstoffschlauch					
UBSOLL	V	0... FFH	0... 25.5	0.1	V
Bordnetzspannungssollwert					
VDAAGWBKS	V	8000... 7FFFH	-327.68 ...327.67	0.01	mm3
Grenzwert für Volumen für Druckauf- oder Abbau aus der VSTMSV für die Freigabe Überwachung des Hochdruckreglers außerhalb von Wobbeln					
VRHDRDYN	V	8000... 7FFFH	-327.68 ...327.67	0.01	mm3
Grenzwert für die Dynamik im Volumen des Hochdruckreglers für die Erkennung von Dampfblasen außerhalb des Wobbelns					
VRHDRSTAT	V	8000... 7FFFH	-327.68 ...327.67	0.01	mm3
Grenzwert für das Volumen des Hochdruckreglers für die Erkennung von Dampfblasen außerhalb des Wobbelns					
ZBKSGSCH	V	0... FFH	0... 5.1	0.02	s
Verlängerungszeit bei erkannten Schaltvorgang					
ZT1HDCTBKS	V	0... FFFFH	0... 1310.7	0.02	s
Entprellzeit 1 für Freigabe der Überwachung des Hochdruckreglers					
ZT2HDCTBKS	V	0... FFFFH	0... 1310.7	0.02	s

Copyright ©Continental AG. Transmittal, reproduction, dissemination and/or editing of this document as well as utilisation of its contents and communication thereof to others without expressed authorisation are prohibited. Offenders will be held liable for payment of damages. All rights created by patent grant or registration of a utility model or design patent are reserved.

Name	Mode	Coded Limits	Display Limits	Resolution	Unit
Entprellzeit 2 für Freigabe der Überwachung des Hochdruckreglers					
ZTHDCTRBKS	V	0... FFFFH	0... 1310.7	0.02	s
Entprellzeit für die Überwachung des Hochdruckreglers außerhalb des wobbelns					
ZZGBKSE	V	0... FFH	0... 25.5	0.1	s
Entprellzeitkonstante für E_erdbksy zur Absicherung von Heilung eines Niederdrucksensorfehlers					

Configuration Data

Name	Mode	Coded Limits	Display Limits	Resolution	Unit
NLC_EFP_PROD_FEAT_ON	-	0... 1H	0 ...1	1	-
Production feature selector(low pressure pump not running during production process): 1- feature is active, 0-feature is deactivated (Defalut value 0)					

General Information

Application Conditions

Initialisation: `RST, IGKON, CLRFMY, IGKOFF, NVMINI, NVMRES, NVMSTO`

Activation:
```
20MS: always
100MS: always
```

Deactivation: `never`

Recurrence: `20MS, 100MS`

Function Description

Copyright ©Continental AG. Transmittal, reproduction, dissemination and/or editing of this document as well as utilisation of its contents and communication thereof to others without expressed authorisation are prohibited. Offenders will be held liable for payment of damages. All rights created by patent grant or registration of a utility model or design patent are reserved.

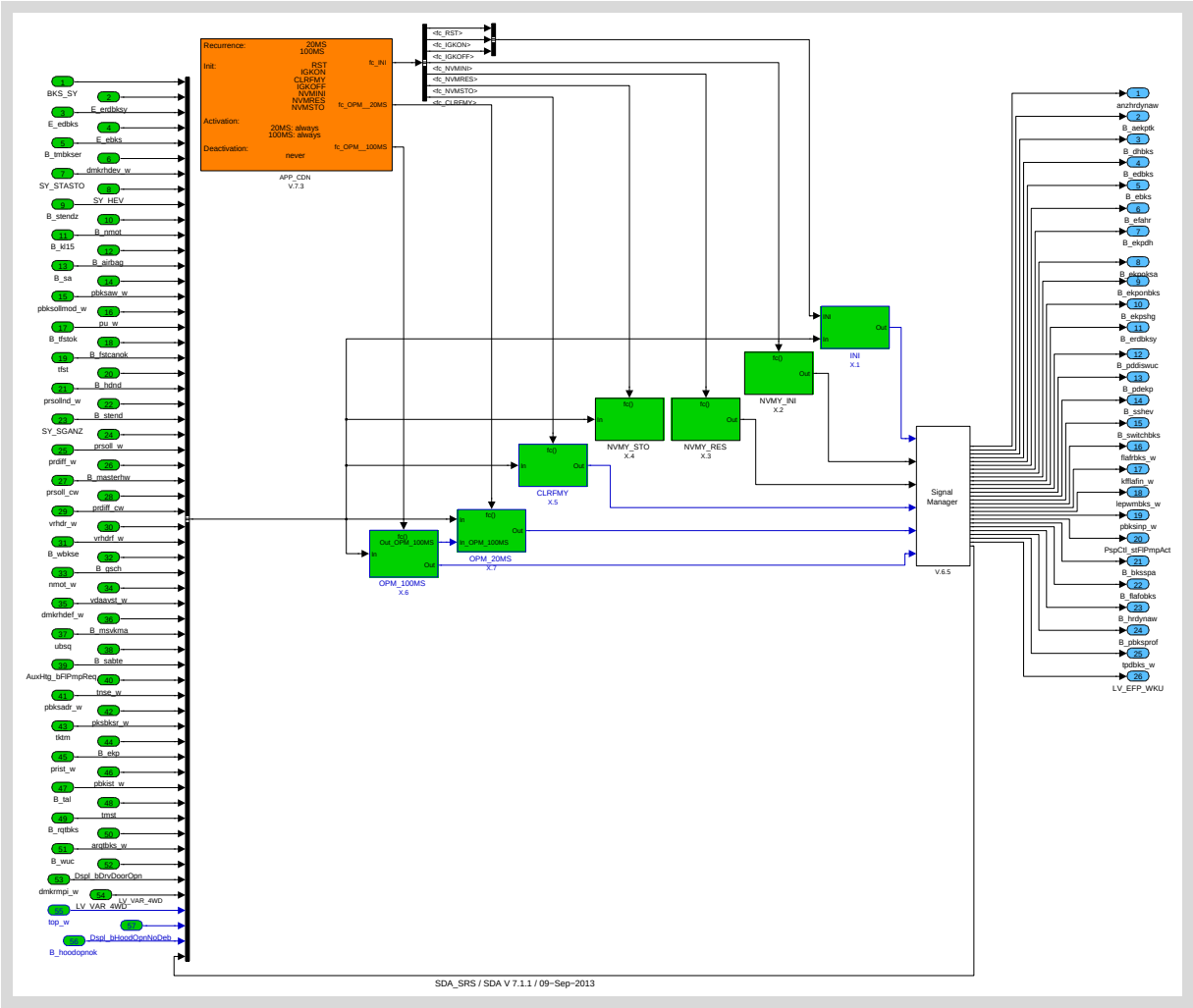

Figure 43.18.1:

Path: FUSL_M908U

Copyright ©Continental AG. Transmittal, reproduction, dissemination and/or editing of this document as well as utilisation of its contents and communication thereof to others without expressed authorisation are prohibited. Offenders will be held liable for payment of damages. All rights created by patent grant or registration of a utility model or design patent are reserved.

43.18.1 Initialization

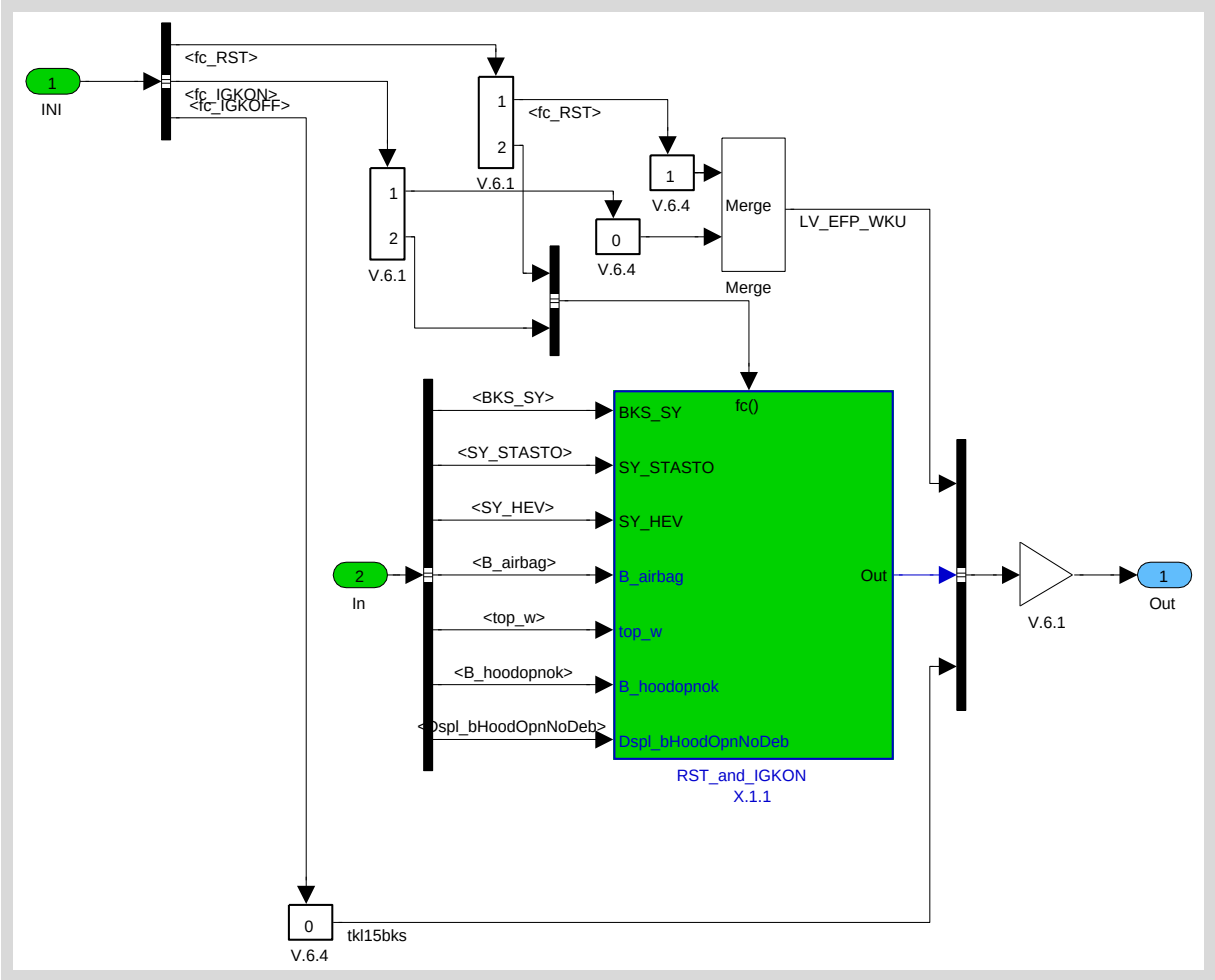

Figure 43.18.2:

Path: FUSL_M908U/INI

Copyright ©Continental AG. Transmittal, reproduction, dissemination and/or editing of this document as well as utilisation of its contents and communication thereof to others without expressed authorisation are prohibited. Offenders will be held liable for payment of damages. All rights created by patent grant or registration of a utility model or design patent are reserved.

43.18.1.1 Reset and Ignition ON

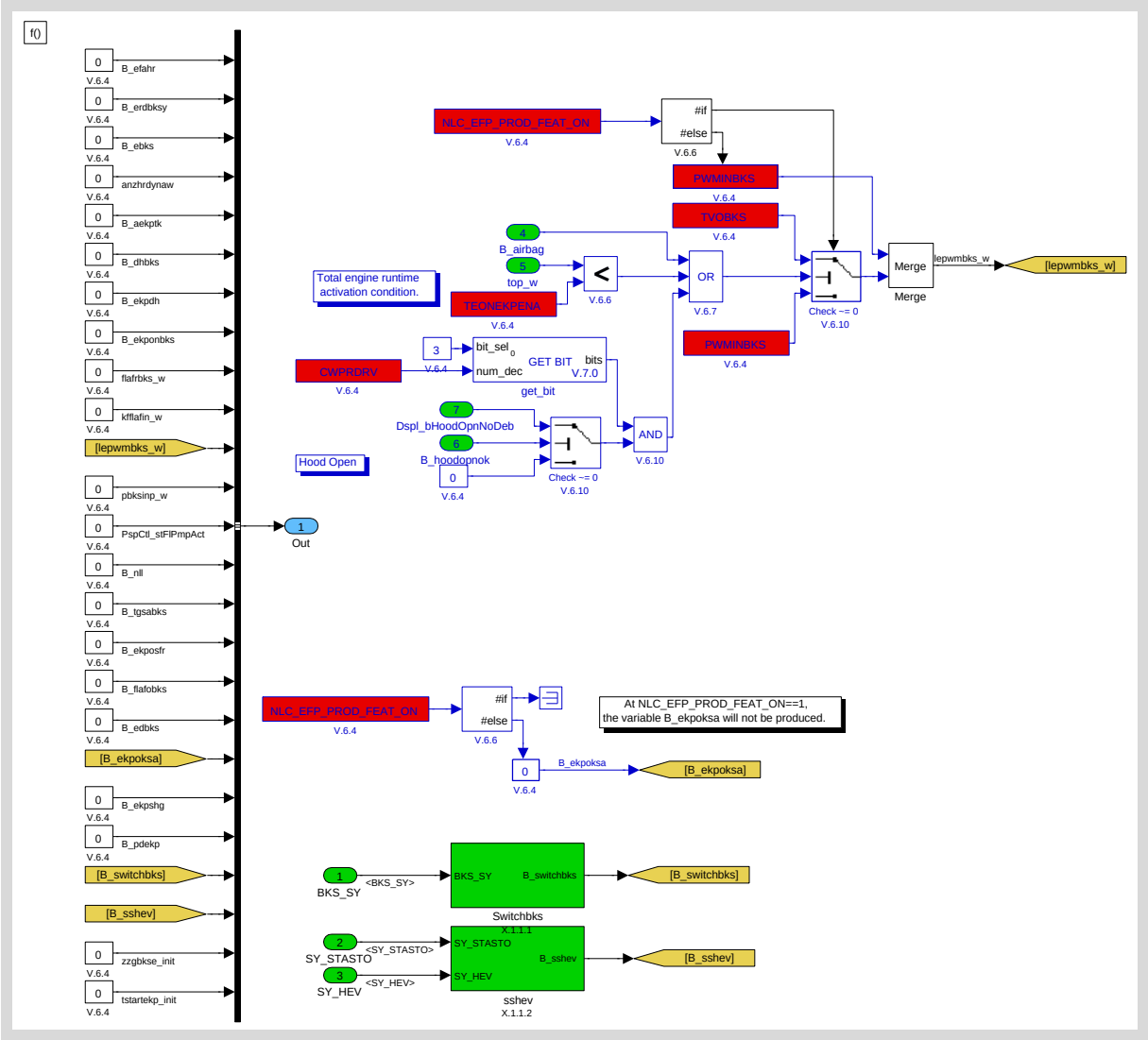

Figure 43.18.3:

P ath: FUSL_M908U/INI/RST_and_IGKON

1.1.1.1 Switchbks

Copyright ©Continental AG. Transmittal, reproduction, dissemination and/or editing of this document as well as utilisation of its contents and communication thereof to others without expressed authorisation are prohibited. Offenders will be held liable for payment of damages. All rights created by patent grant or registration of a utility model or design patent are reserved.

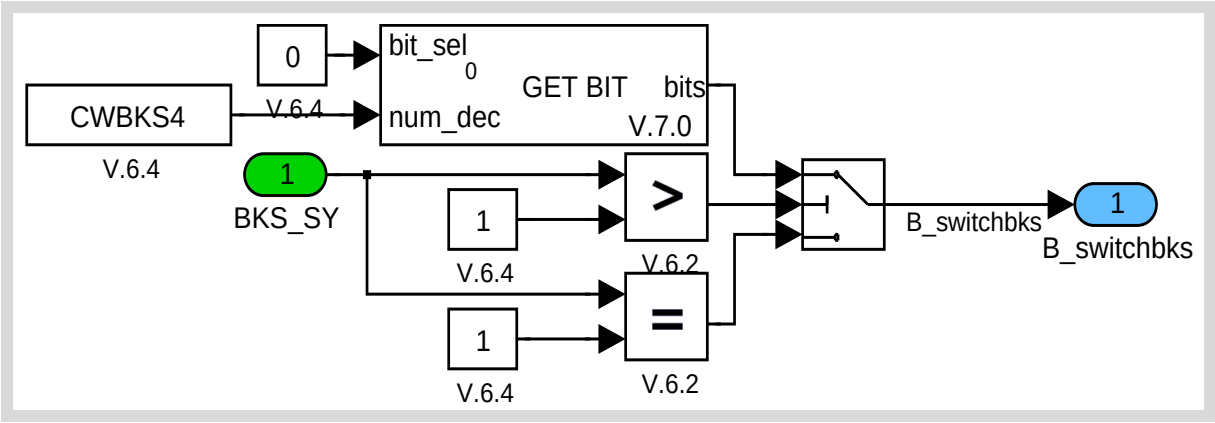

Figure 43.18.4:

Path: FUSL_M908U/INI/Switchbks

1.1.1.2 Sshev

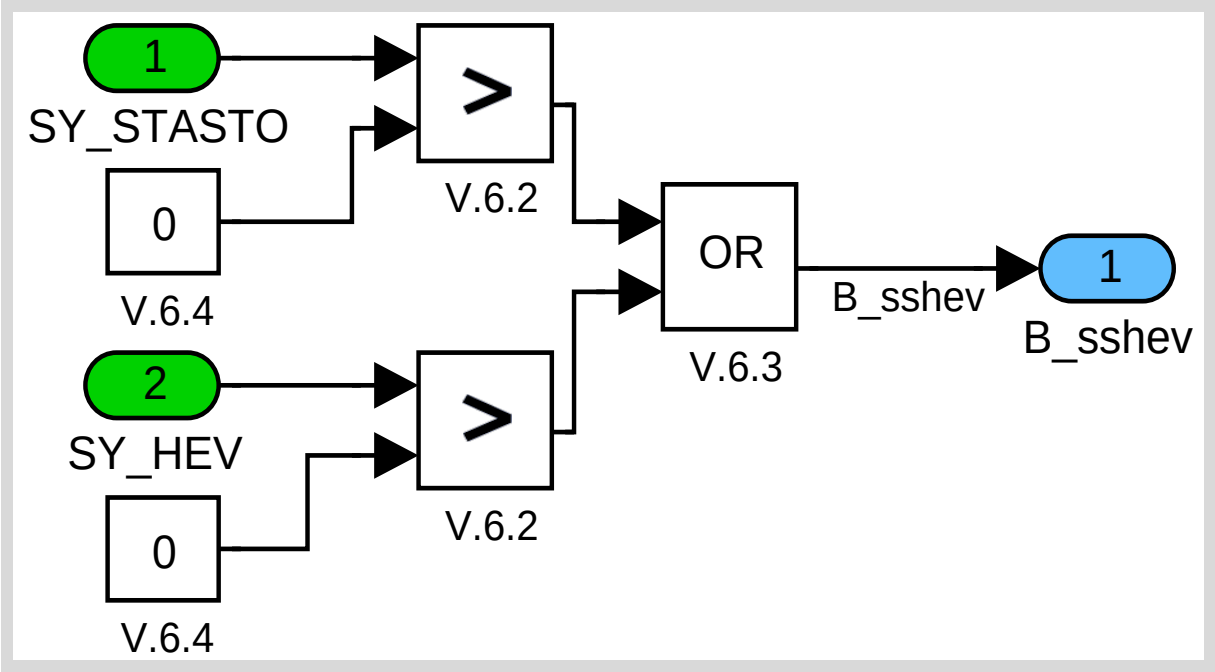

Figure 43.18.5:

Path: FUSL_M908U/INI/sshev

Copyright ©Continental AG. Transmittal, reproduction, dissemination and/or editing of this document as well as utilisation of its contents and communication thereof to others without expressed authorisation are prohibited. Offenders will be held liable for payment of damages. All rights created by patent grant or registration of a utility model or design patent are reserved.

43.18.2 NVMY_INI

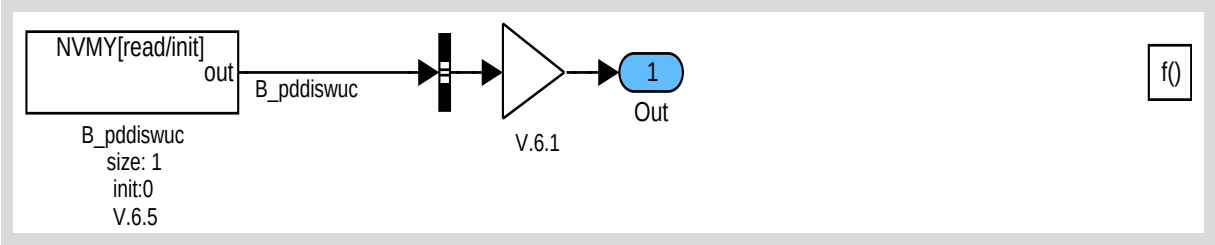

Figure 43.18.6:

Path: FUSL_M908U/NVMY_INI

43.18.3 NVMY_RES

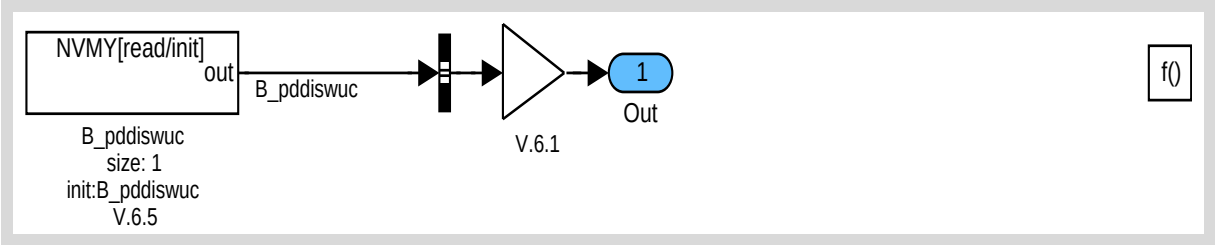

Figure 43.18.7:

Path: FUSL_M908U/NVMY_RES

43.18.4 NVMY_STO

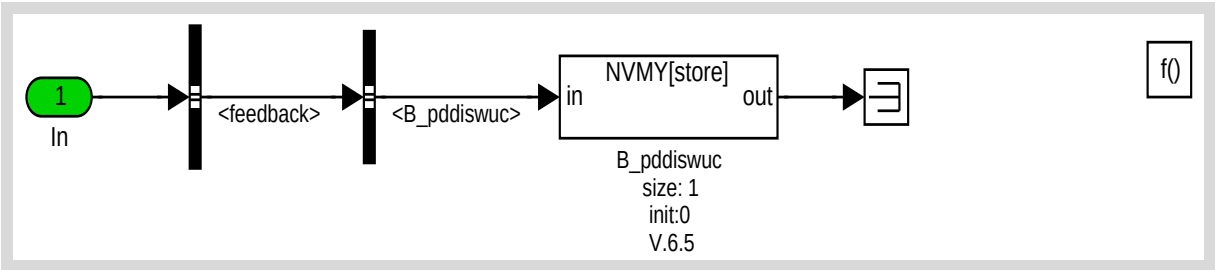

Figure 43.18.8:

Path: FUSL_M908U/NVMY_STO

Copyright ©Continental AG. Transmittal, reproduction, dissemination and/or editing of this document as well as utilisation of its contents and communication thereof to others without expressed authorisation are prohibited. Offenders will be held liable for payment of damages. All rights created by patent grant or registration of a utility model or design patent are reserved.

43.18.5 CLRFMY

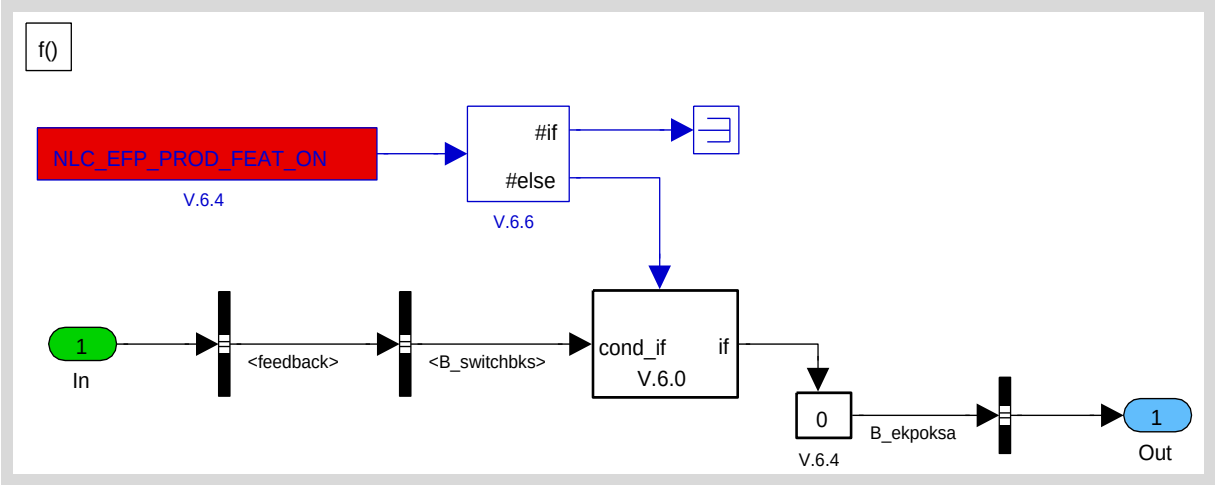

Figure 43.18.9:

Path: FUSL_M908U/CLRFMY

Copyright ©Continental AG. Transmittal, reproduction, dissemination and/or editing of this document as well as utilisation of its contents and communication thereof to others without expressed authorisation are prohibited. Offenders will be held liable for payment of damages. All rights created by patent grant or registration of a utility model or design patent are reserved.

43.18.6 OPM_100MS

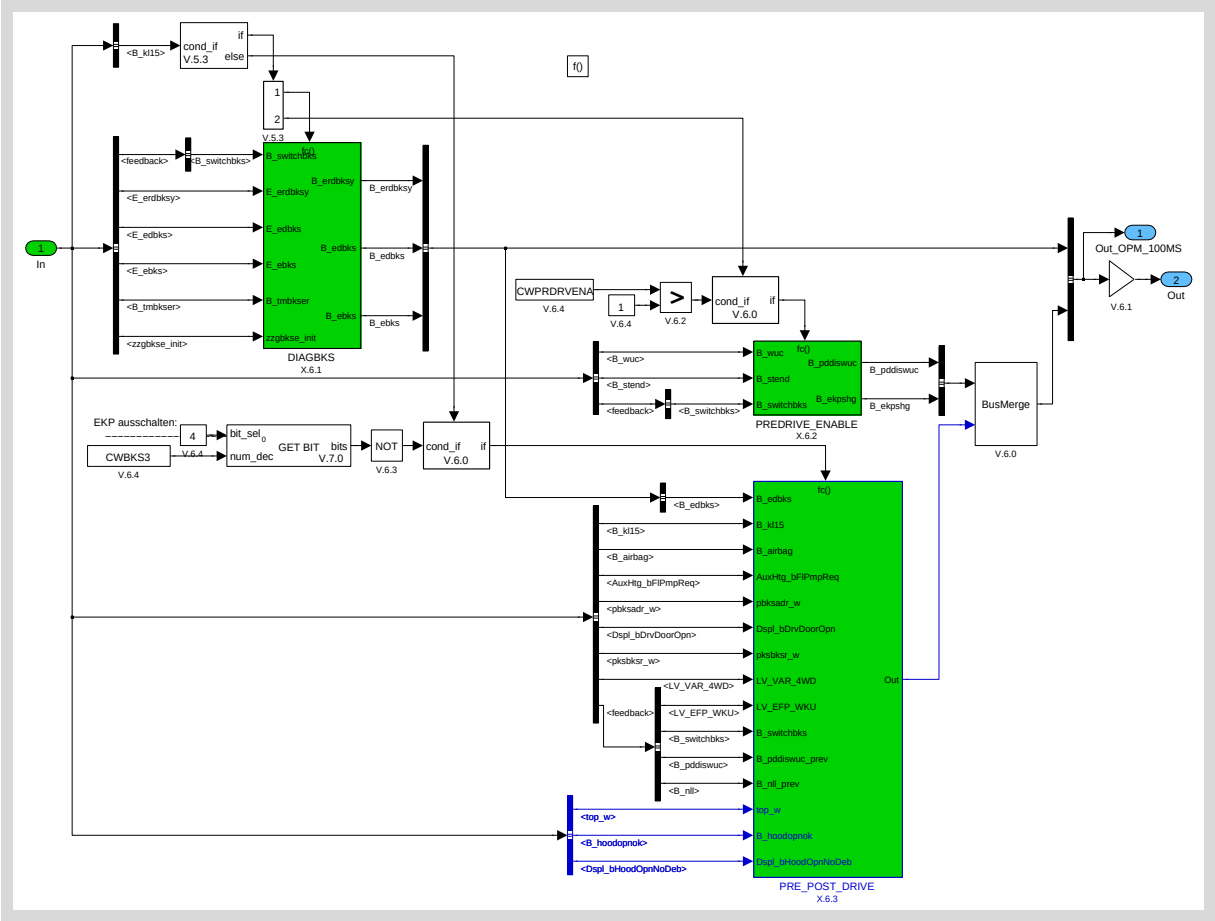

Figure 43.18.10:

Path: FUSL_M908U/OPM_100MS

Copyright ©Continental AG. Transmittal, reproduction, dissemination and/or editing of this document as well as utilisation of its contents and communication thereof to others without expressed authorisation are prohibited. Offenders will be held liable for payment of damages. All rights created by patent grant or registration of a utility model or design patent are reserved.

43.18.6.1 DIAGBKS

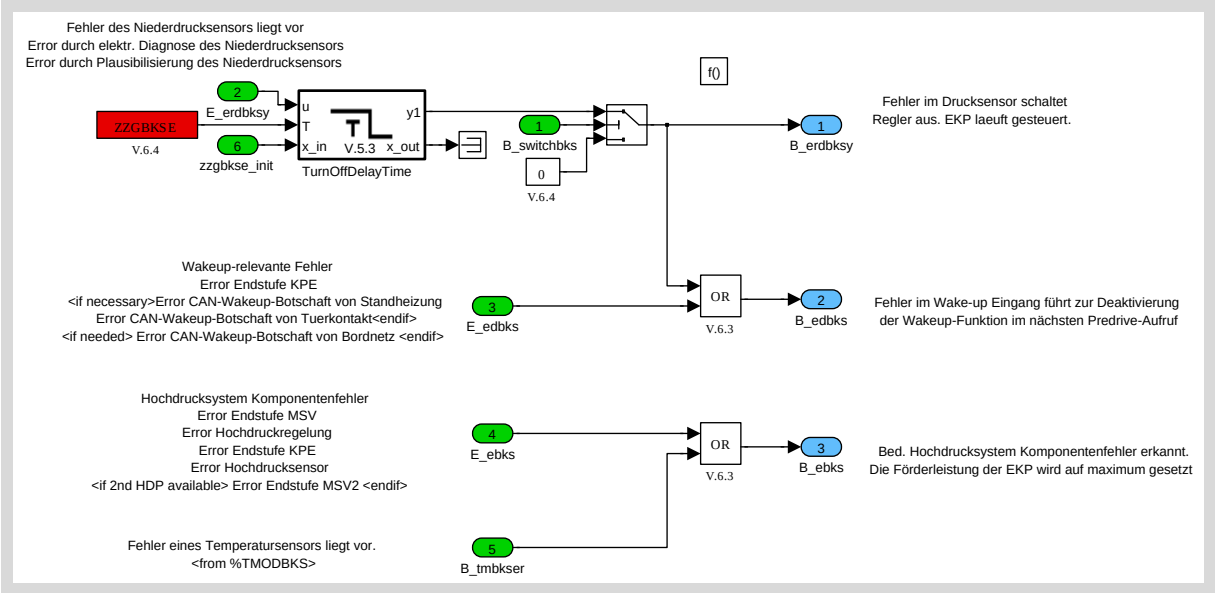

Figure 43.18.11:

Path: FUSL_M908U/OPM_100MS/DIAGBKS

43.18.6.2 PREDRIVE_ENABLE

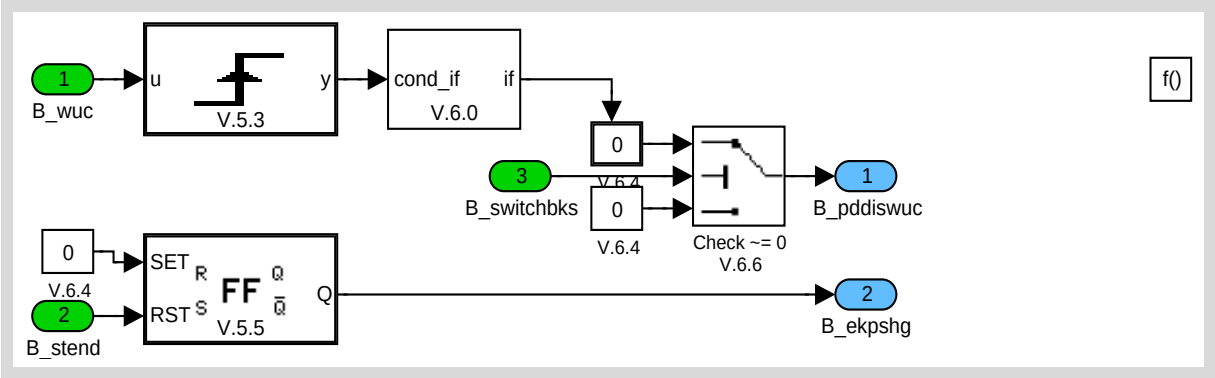

Figure 43.18.12:

Path: FUSL_M908U/OPM_100MS/PREDRIVE_ENABLE

Copyright ©Continental AG. Transmittal, reproduction, dissemination and/or editing of this document as well as utilisation of its contents and communication thereof to others without expressed authorisation are prohibited. Offenders will be held liable for payment of damages. All rights created by patent grant or registration of a utility model or design patent are reserved.

43.18.6.3 PRE_POST_DRIVE

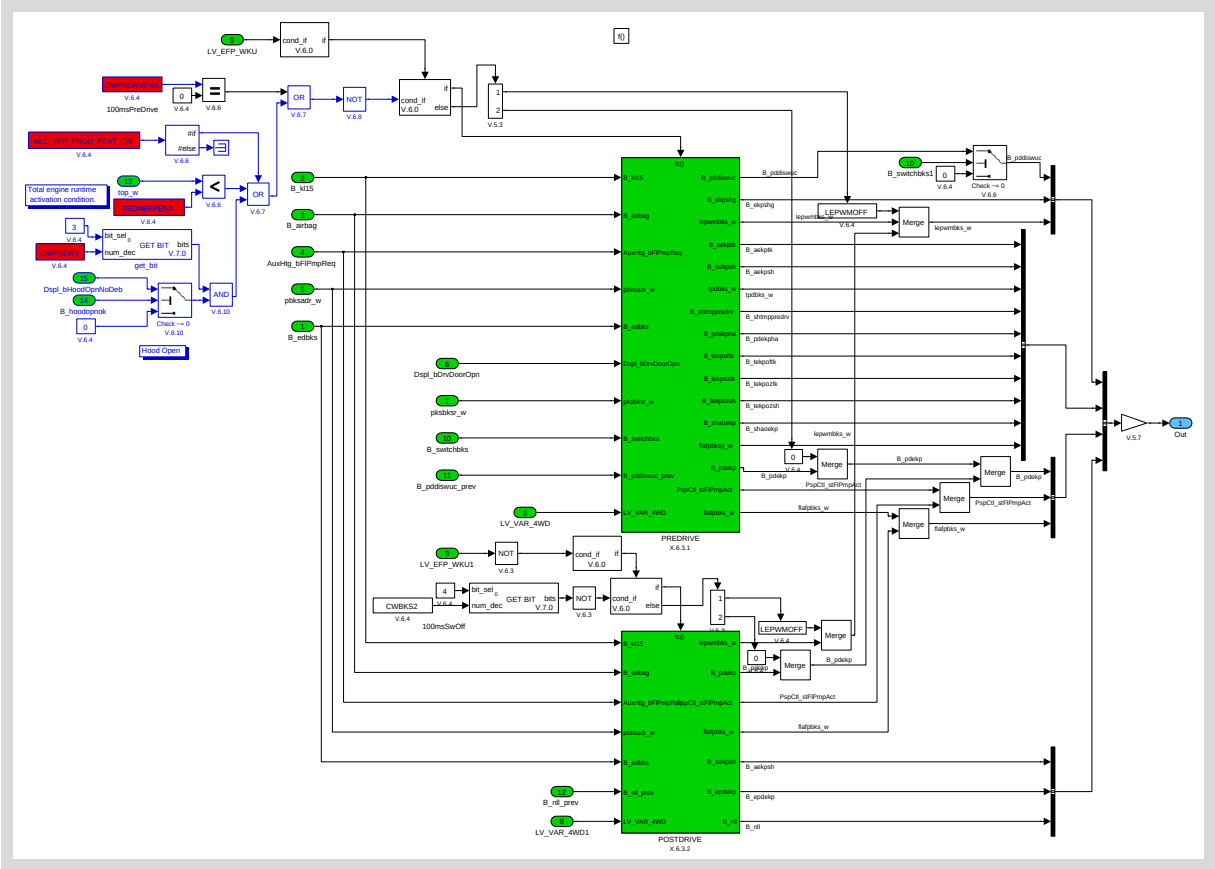

Figure 43.18.13:

Path: FUSL_M908U/OPM_100MS/PRE_POST_DRIVE

1.6.3.1 PREDRIVE

Copyright ©Continental AG. Transmittal, reproduction, dissemination and/or editing of this document as well as utilisation of its contents and communication thereof to others without expressed authorisation are prohibited. Offenders will be held liable for payment of damages. All rights created by patent grant or registration of a utility model or design patent are reserved.

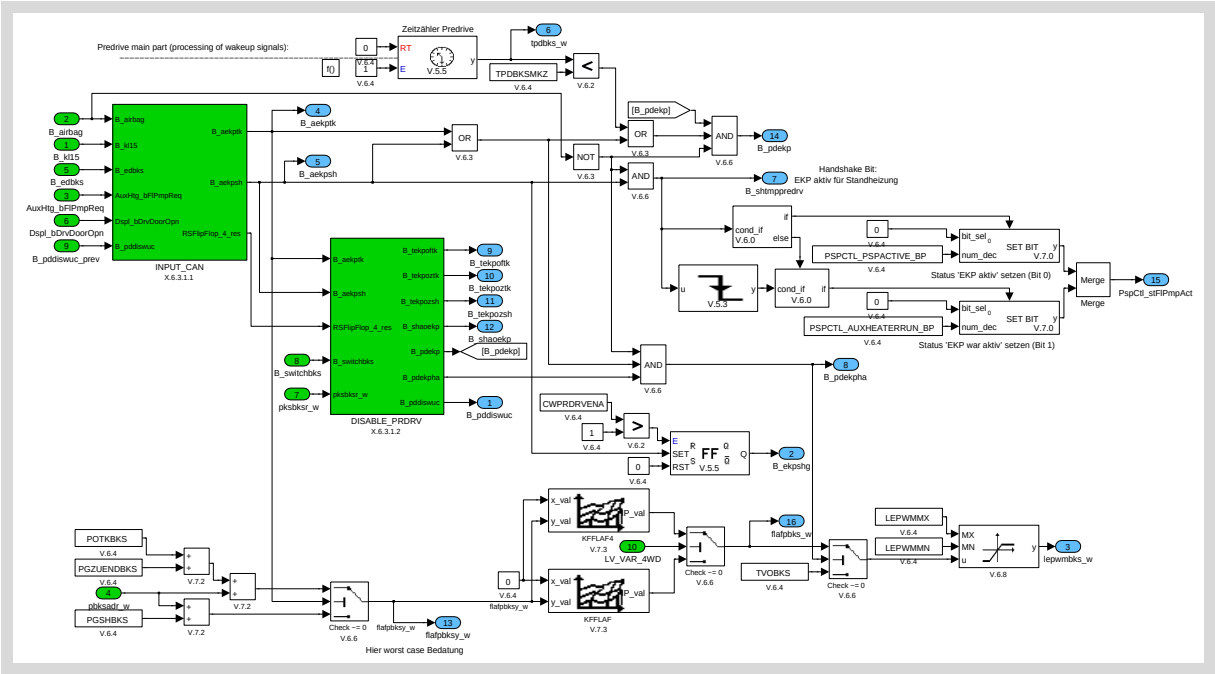

Figure 43.18.14:

Path: FUSL_M908U/OPM_100MS/PRE_POST_DRIVE/PREDRIVE

1.6.3.1.1 INPUT_CAN

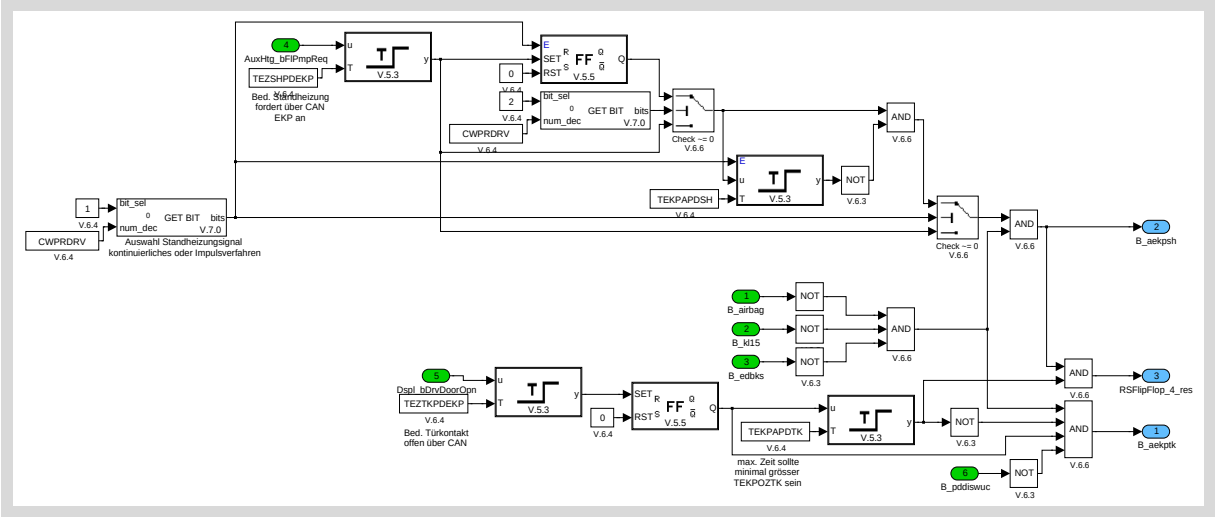

Figure 43.18.15:

Path: FUSL_M908U/OPM_100MS/PRE_POST_DRIVE/PREDRIVE/INPUT_CAN

1.6.3.1.2 DISABLE_PRDRV

Copyright ©Continental AG. Transmittal, reproduction, dissemination and/or editing of this document as well as utilisation of its contents and communication thereof to others without expressed authorisation are prohibited. Offenders will be held liable for payment of damages. All rights created by patent grant or registration of a utility model or design patent are reserved.

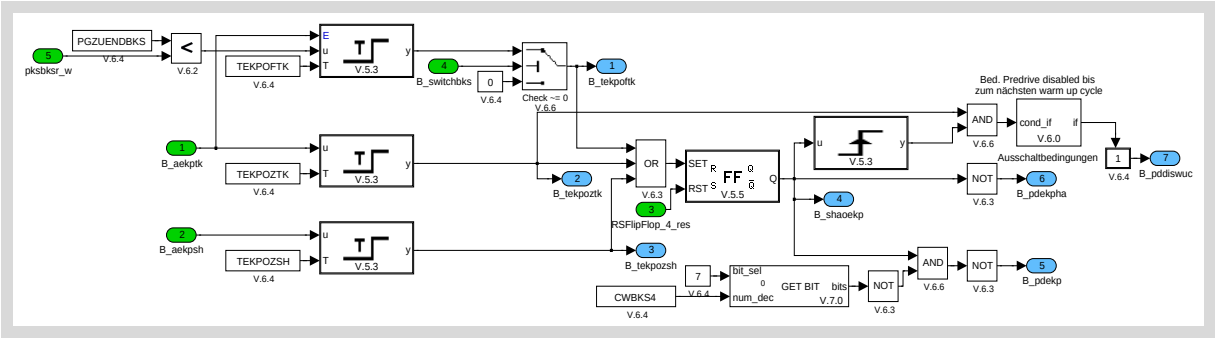

Figure 43.18.16:

Path: FUSL_M908U/OPM_100MS/PRE_POST_DRIVE/PREDRIVE/DISABLE_PRDRV

1.6.3.2 POSTDRIVE

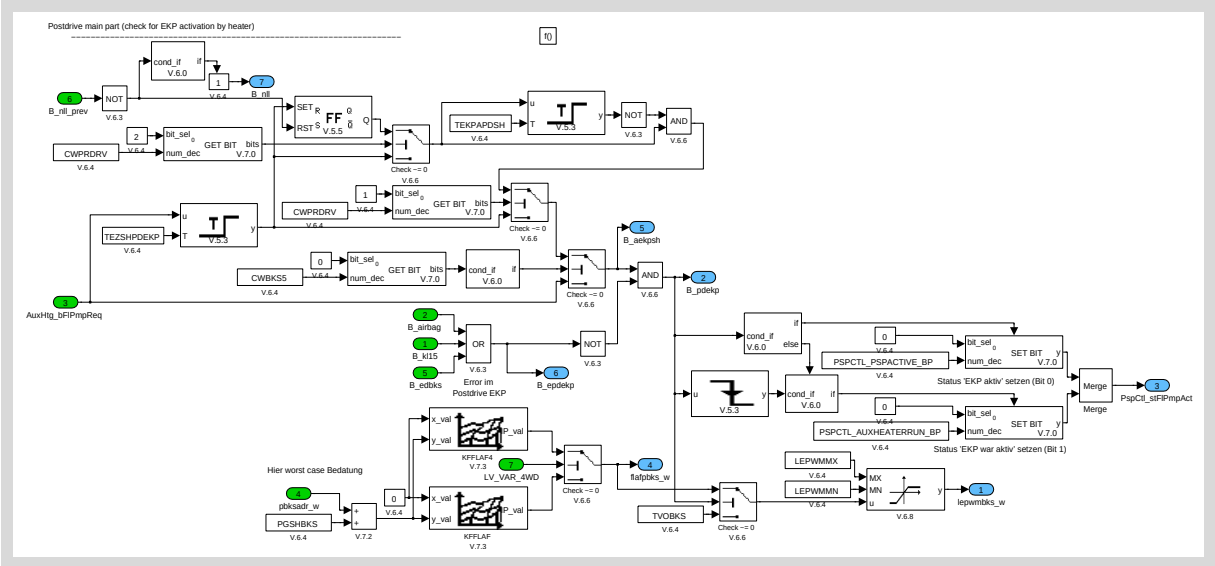

Figure 43.18.17:

Path: FUSL_M908U/OPM_100MS/PRE_POST_DRIVE/POSTDRIVE

Copyright ©Continental AG. Transmittal, reproduction, dissemination and/or editing of this document as well as utilisation of its contents and communication thereof to others without expressed authorisation are prohibited. Offenders will be held liable for payment of damages. All rights created by patent grant or registration of a utility model or design patent are reserved.

43.18.7 OPM_20MS

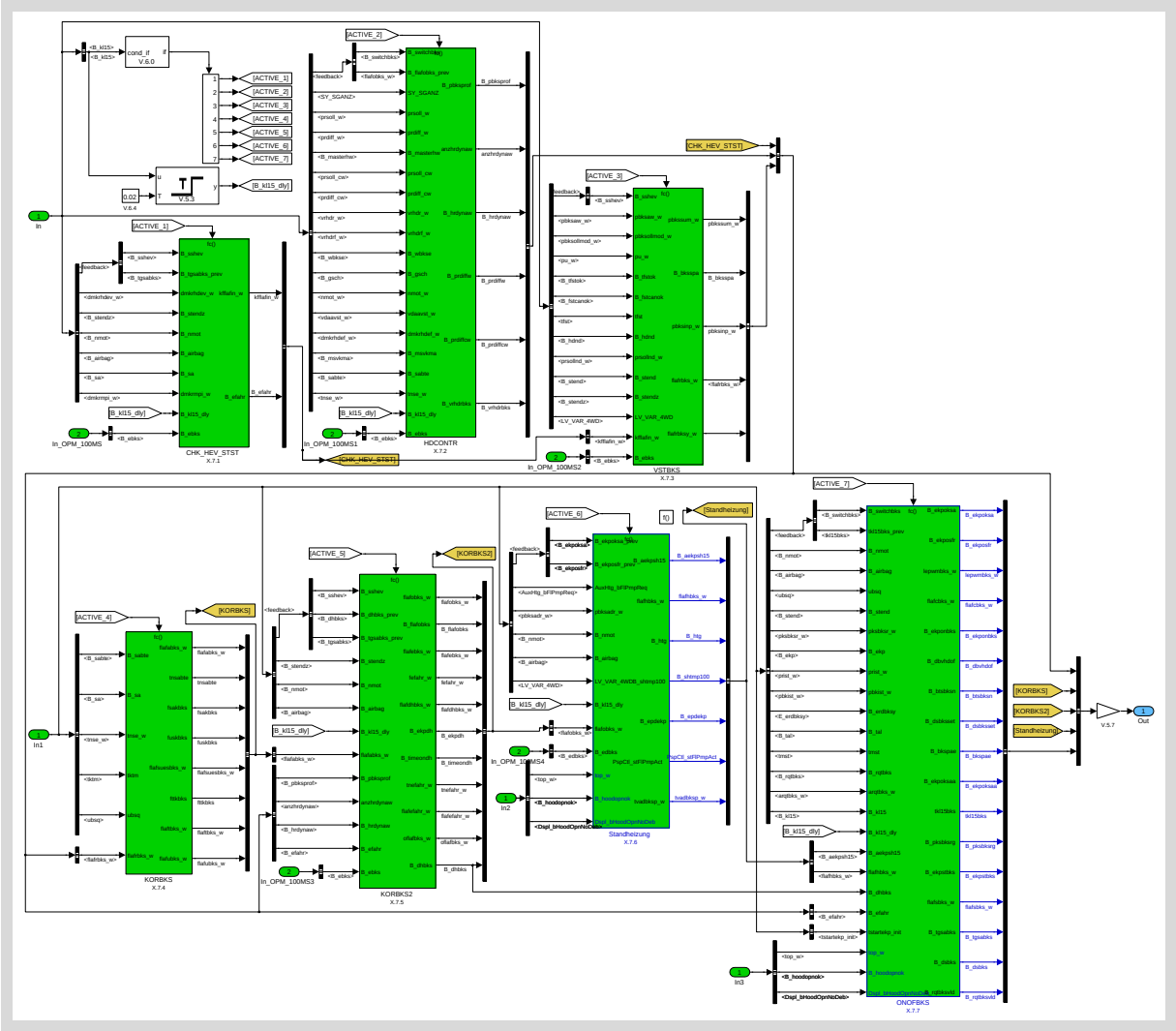

Figure 43.18.18:

Path: FUSL_M908U/OPM_20MS

Copyright©Continental AG. Transmittal, reproduction, dissemination and/or editing of this document as well as utilisation of its contents and communication thereof to others without expressed authorisation are prohibited. Offenders will be held liable for payment of damages. All rights created by patent grant or registration of a utility model or design patent are reserved.

43.18.7.1 CHK_HEV_STST

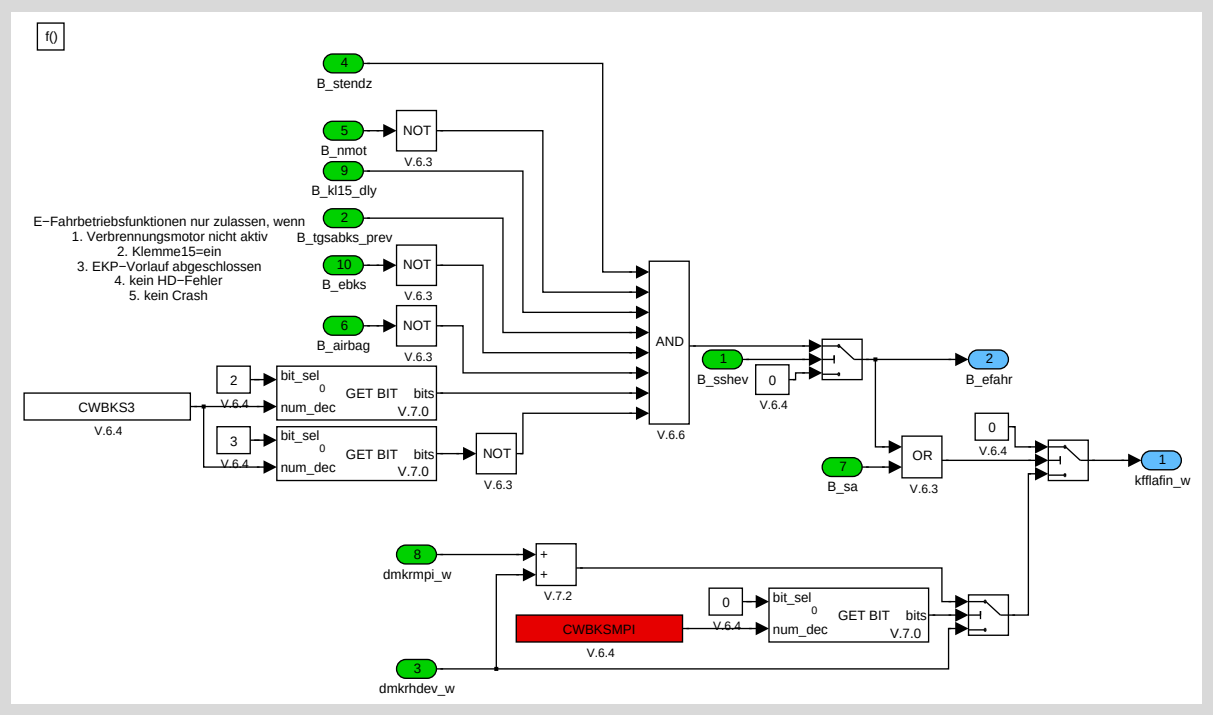

Figure 43.18.19:

Path: FUSL_M908U/OPM_20MS/CHK_HEV_STST

Copyright ©Continental AG. Transmittal, reproduction, dissemination and/or editing of this document as well as utilisation of its contents and communication thereof to others without expressed authorisation are prohibited. Offenders will be held liable for payment of damages. All rights created by patent grant or registration of a utility model or design patent are reserved.

43.18.7.2 HDCONTR

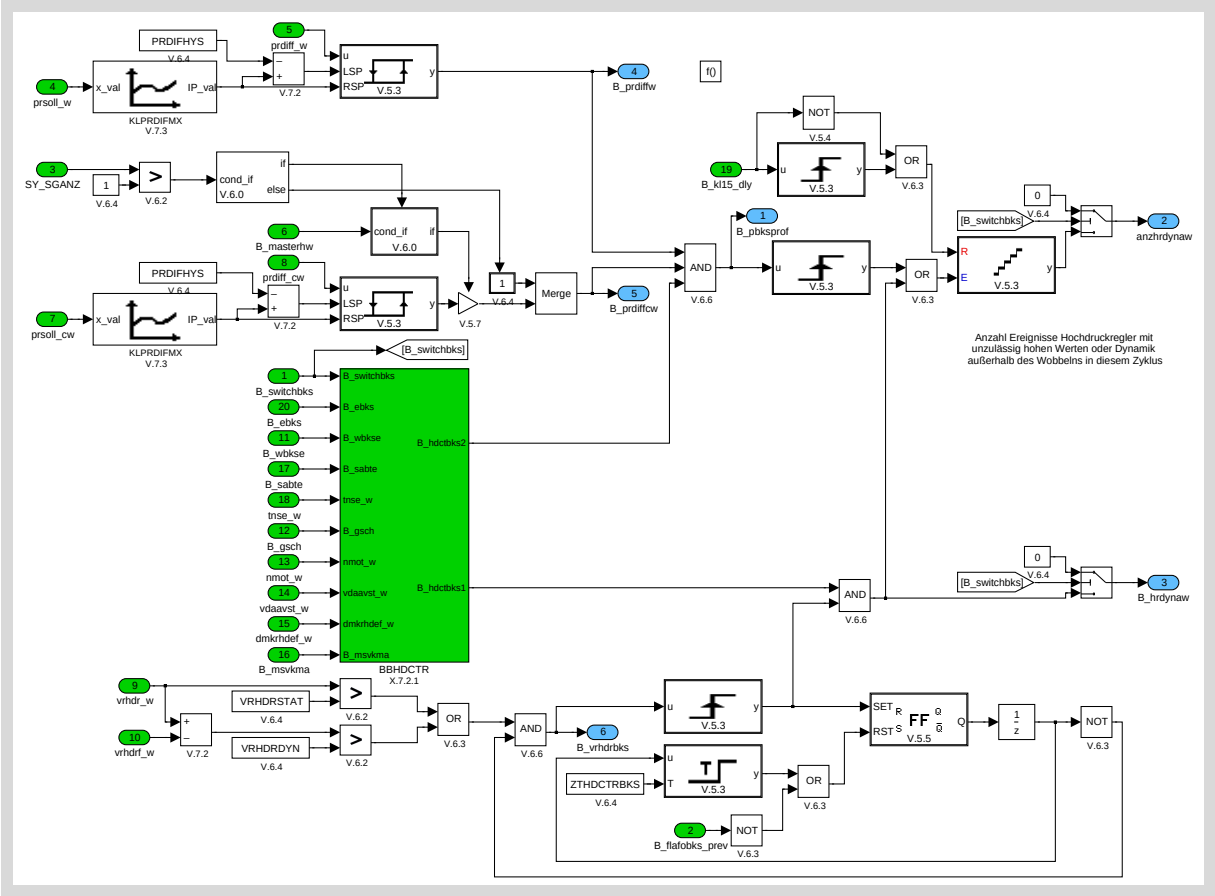

Figure 43.18.20:

Path: FUSL_M908U/OPM_20MS/HDCONTR

1.7.2.1 BBHDCTR

Copyright ©Continental AG. Transmittal, reproduction, dissemination and/or editing of this document as well as utilisation of its contents and communication thereof to others without expressed authorisation are prohibited. Offenders will be held liable for payment of damages. All rights created by patent grant or registration of a utility model or design patent are reserved.

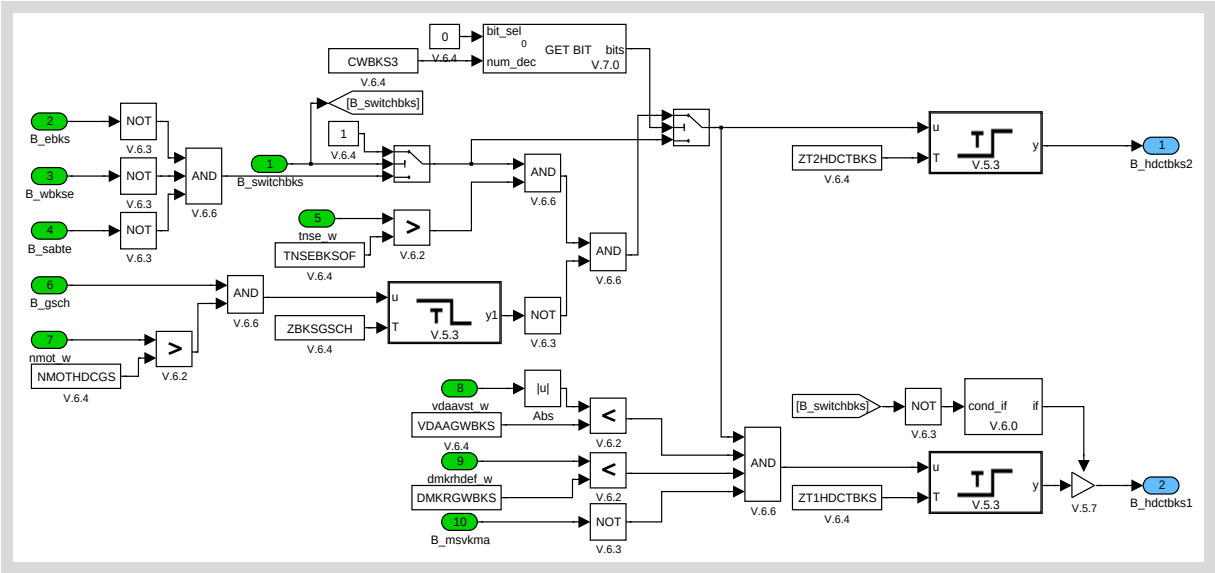

Figure 43.18.21:

Path: FUSL_M908U/OPM_20MS/HDCONTR/BBHDCTR

43.18.7.3 VSTBKS

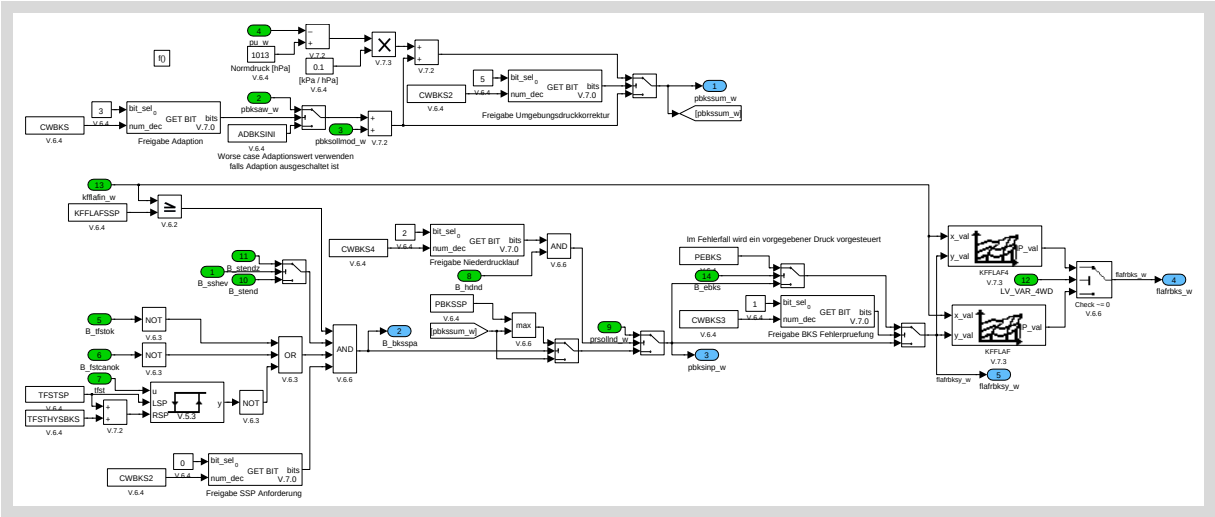

Figure 43.18.22:

Path: FUSL_M908U/OPM_20MS/VSTBKS

Copyright©Continental AG. Transmittal, reproduction, dissemination and/or editing of this document as well as utilisation of its contents and communication thereof to others without expressed authorisation are prohibited. Offenders will be held liable for payment of damages. All rights created by patent grant or registration of a utility model or design patent are reserved.

43.18.7.4 KORBKS

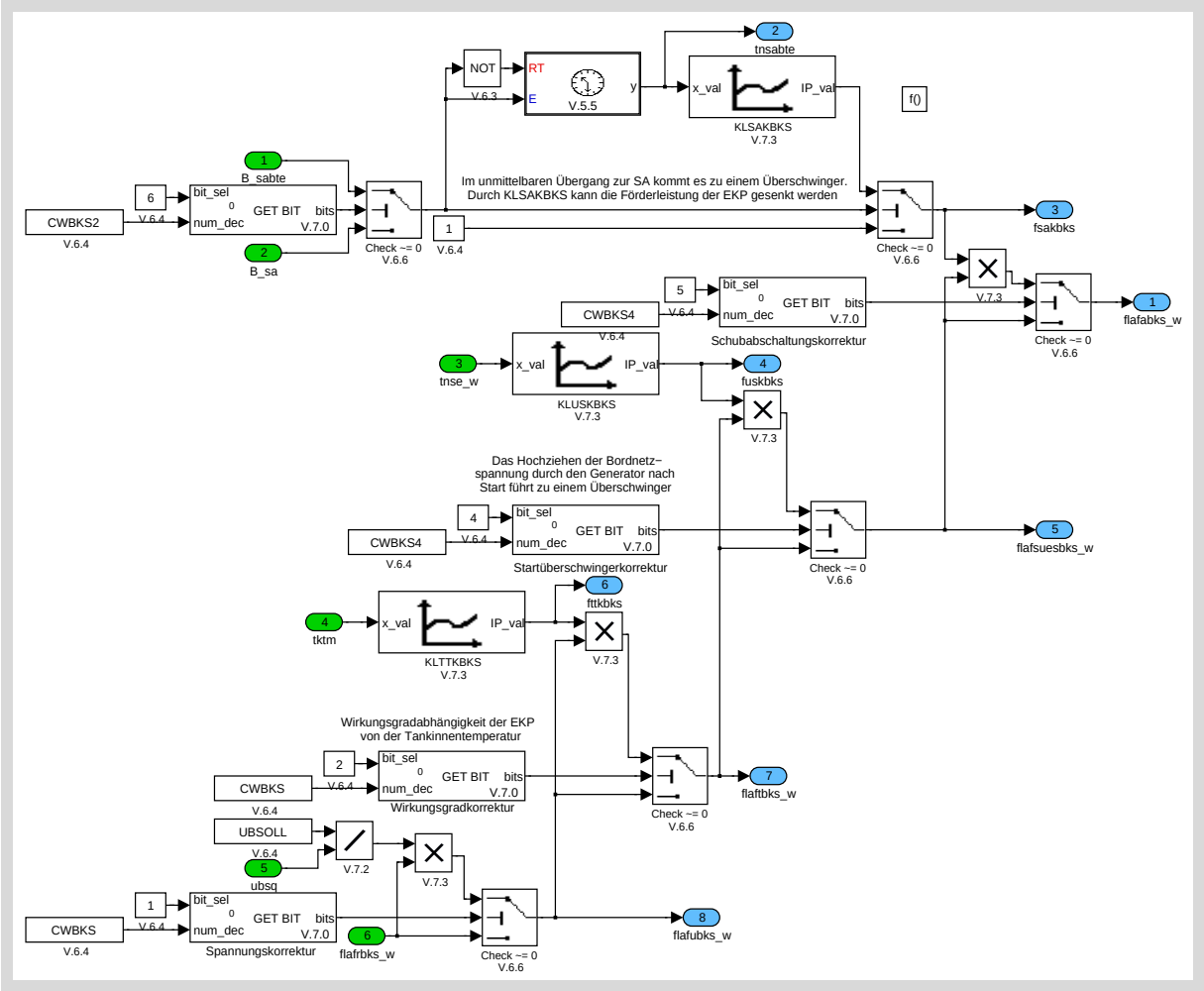

Figure 43.18.23:

Path: FUSL_M908U/OPM_20MS/KORBKS

43.18.7.5 KORBKS2

Copyright ©Continental AG. Transmittal, reproduction, dissemination and/or editing of this document as well as utilisation of its contents and communication thereof to others without expressed authorisation are prohibited. Offenders will be held liable for payment of damages. All rights created by patent grant or registration of a utility model or design patent are reserved.

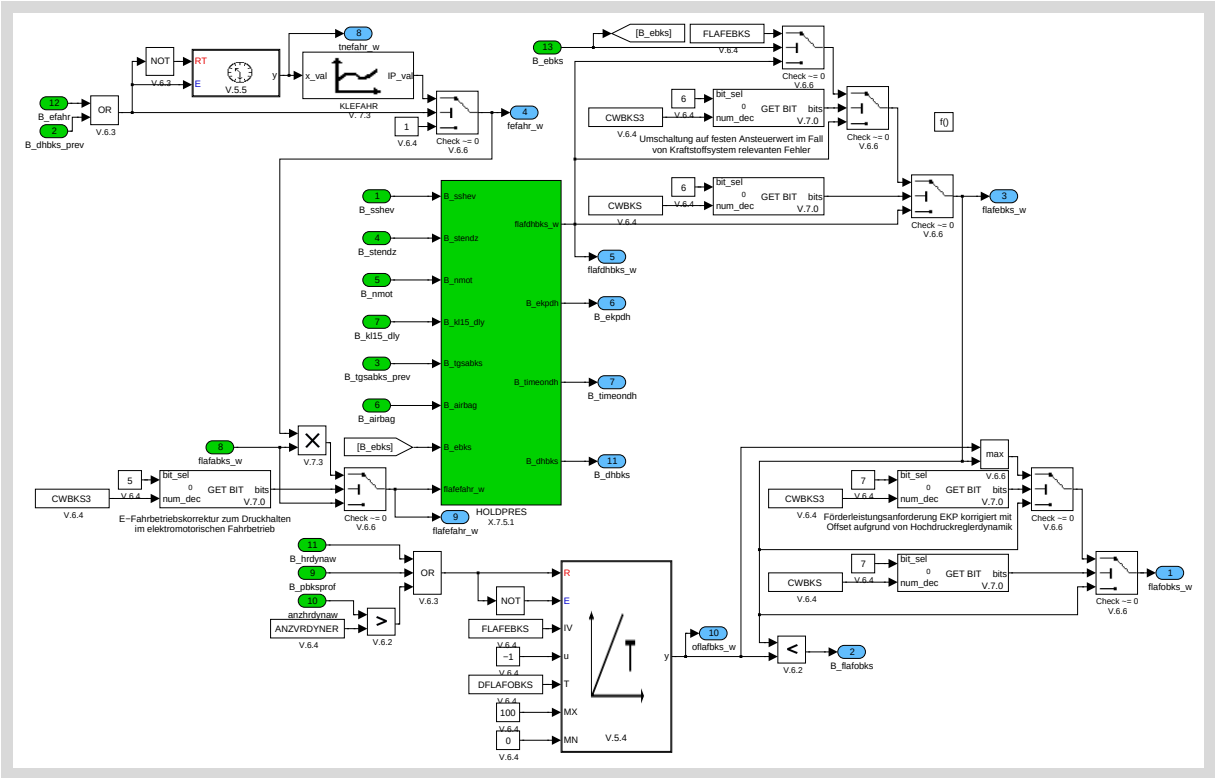

Figure 43.18.24:

Path: FUSL_M908U/OPM_20MS/KORBKS2

1.7.5.1 HOLDPRES

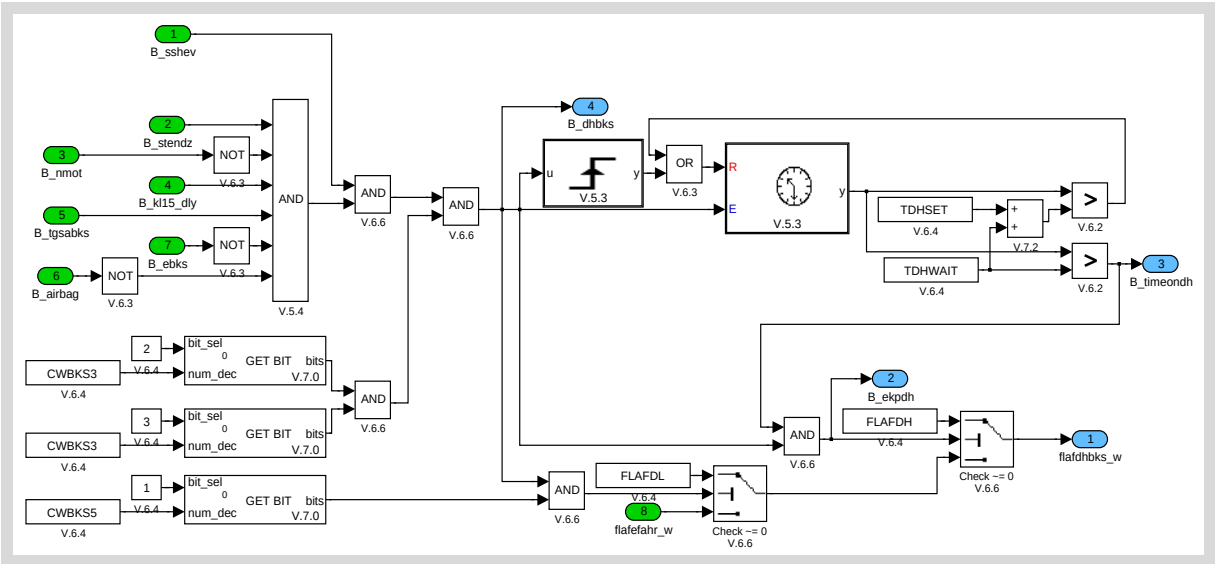

Figure 43.18.25:

Path: FUSL_M908U/OPM_20MS/KORBKS2/HOLDPRES

Copyright ©Continental AG. Transmittal, reproduction, dissemination and/or editing of this document as well as utilisation of its contents and communication thereof to others without expressed authorisation are prohibited. Offenders will be held liable for payment of damages. All rights created by patent grant or registration of a utility model or design patent are reserved.

43.18.7.6 Standheizung

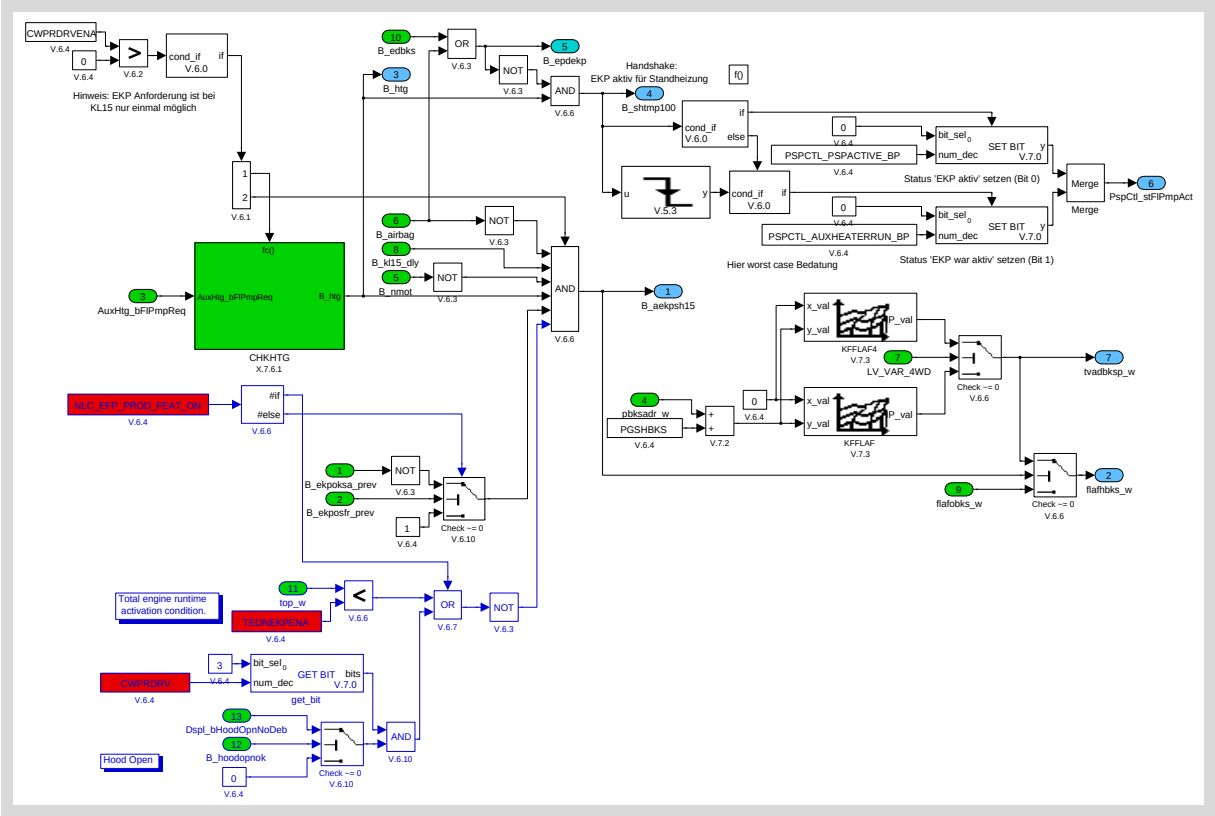

Figure 43.18.26:

Path: FUSL_M908U/OPM_20MS/Standheizung

1.7.6.1 CHKHTG

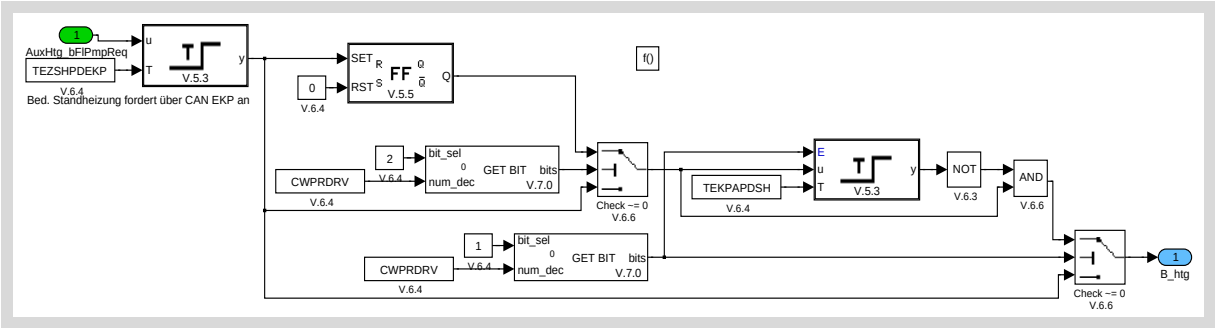

Figure 43.18.27:

Path: FUSL_M908U/OPM_20MS/Standheizung/CHKHTG

Copyright ©Continental AG. Transmittal, reproduction, dissemination and/or editing of this document as well as utilisation of its contents and communication thereof to others without expressed authorisation are prohibited. Offenders will be held liable for payment of damages. All rights created by patent grant or registration of a utility model or design patent are reserved.

43.18.7.7 ONOFBKS

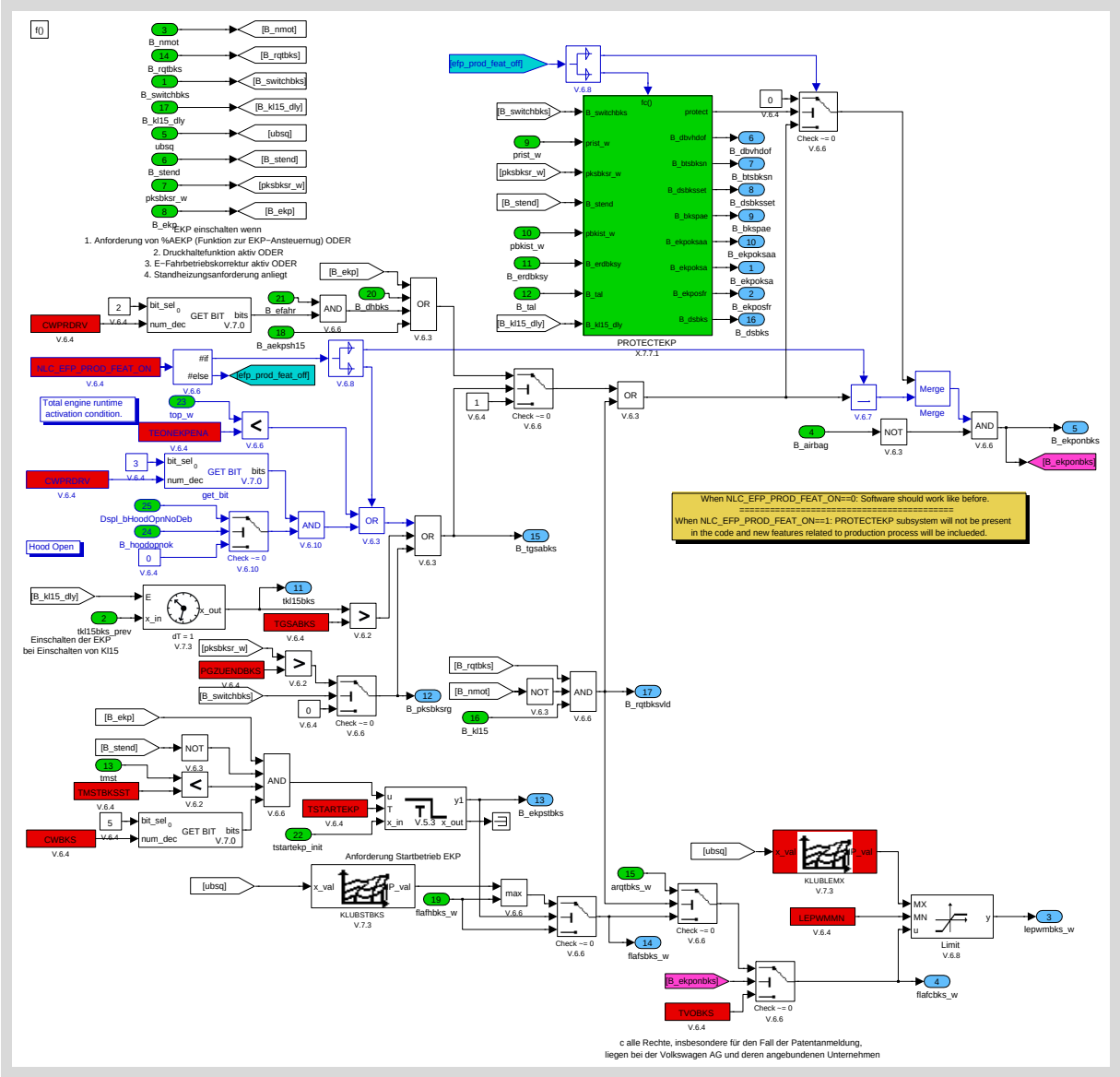

Figure 43.18.28:

Path: FUSL_M908U/OPM_20MS/ONOFBKS

1.7.7.1 PROTECTEKP

Copyright ©Continental AG. Transmittal, reproduction, dissemination and/or editing of this document as well as utilisation of its contents and communication thereof to others without expressed authorisation are prohibited. Offenders will be held liable for payment of damages. All rights created by patent grant or registration of a utility model or design patent are reserved.

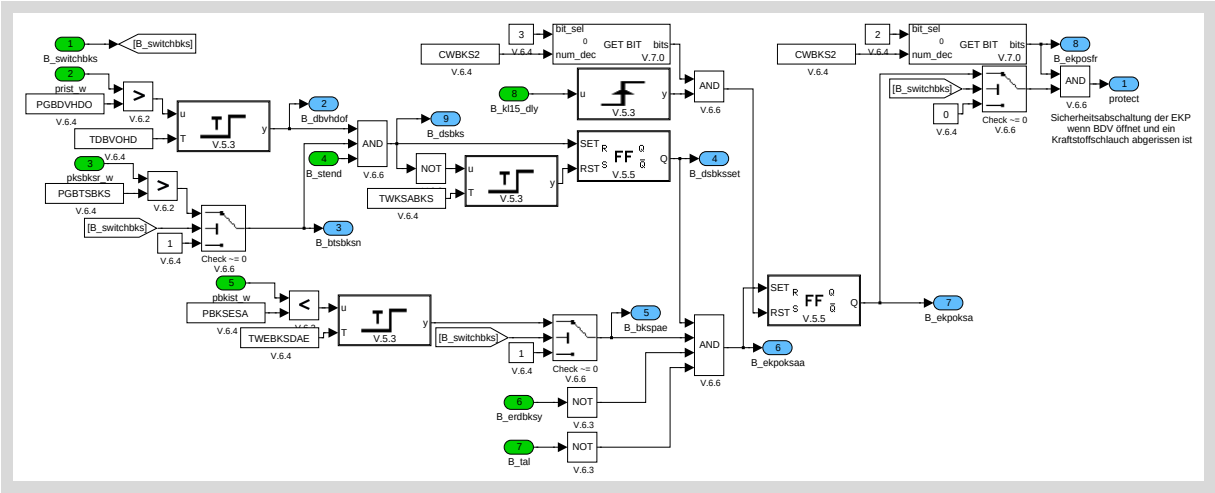

Figure 43.18.29:

FUSL_M908U/OPM_20MS/ONOFBKS/PROTECTEKP

Copyright ©Continental AG. Transmittal, reproduction, dissemination and/or editing of this document as well as utilisation of its contents and communication thereof to others without expressed authorisation are prohibited. Offenders will be held liable for payment of damages. All rights created by patent grant or registration of a utility model or design patent are reserved.

43.19 Fuel pump low pressure control coordination (Appl. Inc.)

Data Definition

Name	Mode	Coded Limits	Display Limits	Resolution	Unit
EFPPWM_ACR_TEST	V	0... FFFFH	0... 99.99847412109	0.00152588	%
Low pressure pump duty cycle during actuator test					
EFPPWM_EXT_ADJ	O/V	0... FFFFH	0... 99.99847412109	0.00152588	%
EFPPWM while external controling by service tool					
LV_DEFU_ACT	V	0... 1H	0 ...1	1	-
Logical variable for active defueling function					
LV_DEFU_EXT_REQ	V	0... 1H	0 ...1	1	-
Logical variable for external defueling request					
LV_DEFU_EXT_REQ_OLD	-	0... 1H	0 ...1	1	-
Logical variable for old external defueling request					
LV_DEFU_FTL	V	0... 1H	0 ...1	1	-
Fuel tank level condition used for canceling a running defueling function and for modification of the defueling time on re-activation					
LV_DEFU_FTL_OLD	-	0... 1H	0 ...1	1	-
Old fuel tank level condition used for canceling a running defueling function and for modification of the defueling time on re-activation					
LV_EFPPWM_EXT_ADJ	O/V	0... 1H	0 ...1	1	-
Logical variable indicating external controling of EFPPWM by service tool					
STATE_DEFU	V	0... FFH	0... 255	1	-
Status of defueling function (0x00 = DEFU_NOT_ST, 0x40 =DEFU_CNL, 0xC0 = DEFU_RUN, 0x10 = DEFU_END)					
T_DLY_EFP_ACR_TEST	V	0... FFFFH	0... 655.35	0.01	s
Duration time for the actuator test at EFPPWM = 100 % till switch off (value: 5 s)					
T_STATE_DEFU	V	0... FFFFH	0... 6553.5	0.1	s
Timer variable to calculate the defueling state					

Input Data

CAN_FTL {p. 14318}	LV_ACR_EFPPWM_TEST_REQ {p. 12373}	LV_CAN_ERR_FTL {p. 23177}	LV_EFP {p. 11807}
LV_REFU_ACT {p. 11815}	REFU_EFPPWM {p. 12398}		

Calibration Data

Name	Mode	Coded Limits	Display Limits	Resolution	Unit
C_DEFU_EFPPWM	V	0... FFFFH	0... 99.99847412109	0.00152588	%
Duty cycle of the electrical fuel pump during active defuel function					
C_EFPPWM_ACR_TEST_INC	V	0... FFFFH	0... 99.99847412109	0.00152588	%
Increment for the actuator test					

Copyright ©Continental AG. Transmittal, reproduction, dissemination and/or editing of this document as well as utilisation of its contents and communication thereof to others without expressed authorisation are prohibited. Offenders will be held liable for payment of damages. All rights created by patent grant or registration of a utility model or design patent are reserved.

Name	Mode	Coded Limits	Display Limits	Resolution	Unit
C_EFPPWM_DEAC	V	0... FFFFH	0... 99.99847412109	0.00152588	%
Minimum EFPPWM at ACR_TEST					
C_EFPPWM_MAN_ACT	V	0... FFFFH	0... 99.99847412109	0.00152588	%
Manual value for the EFPPWM					
C_EFPPWM_MAX	V	0... FFFFH	0... 99.99847412109	0.00152588	%
Max. electrical fuel pump speed					
C_FTL_MIN_DEFU	V	0... 7FH	0... 127	1	l
Minimum fuel tank level for defueling function					
C_T_DEFU	V	0... FFFFH	0... 6553.5	0.1	s
Defueling time					
C_T_DEFU_SHO	V	0... FFFFH	0... 6553.5	0.1	s
Short defueling time					
C_T_DEFU_WAIT_NOT_ST	V	0... FFFFH	0... 6553.5	0.1	s
Waiting time to enter defueling state NOT_ST on exit of defueling states CNL or END					
LC_EFPPWM_MAN_ACT	V	0... 1H	0 ...1	1	-
Switch for manual EFPPWM					

Configuration Data

Name	Mode	Coded Limits	Display Limits	Resolution	Unit
NC_T_DLY_EFP_ACR_TEST_MAX	-	0... FFFFH	0... 655.35	0.01	s
Duration time for the actuator test at EFPPWM = 100 % till switch off (value: 5 s)					

Action Definitions

ACTION_FUSL_DefuExtReq(IN <PRM_LV_DEFU_EXT_REQ>)					**Mode: O**
Sets or resets the external defueling request					
Parameter	**Type**	**Hex.Limits**	**Phys.Limits**	**Resol.**	**Unit**
PRM_LV_DEFU_EXT_REQ	in	0... 1H	0 ...1	1	-
Logical variable for external defueling request					

ACTION_FUSL_GetDefuRoutineStatu(OUT <PRM_SRV_31_ROUTINE_STATE>)					**Mode: O**
= ACTION_FUSL_GetDefuRoutineStatus. Routine status of the external defueling request.					
Parameter	**Type**	**Hex.Limits**	**Phys.Limits**	**Resol.**	**Unit**
PRM_SRV_31_ROUTINE_STATE	out	0... FFH	0... 255	1	-
= SRV_31_ROUTINE_STATE. Status of defueling function (0x00 = DEFU_NOT_ST, 0x40 = DEFU_CNL, 0xC0 = DEFU_RUN, 0x10 = DEFU_END)					

General Information

43.19.1 100ms task

Copyright ©Continental AG. Transmittal, reproduction, dissemination and/or editing of this document as well as utilisation of its contents and communication thereof to others without expressed authorisation are prohibited. Offenders will be held liable for payment of damages. All rights created by patent grant or registration of a utility model or design patent are reserved.

General Information

Application Conditions

Initialisation:

```
on RST:
  STATE_DEFU = 'DEFU_NOT_ST'
  T_STATE_DEFU = 0
  LV_DEFU_EXT_REQ_OLD = 1
  LV_DEFU_FTL_OLD = 0
```

Activation: always

Deactivation: never

Recurrence: 100ms

Function Description

```
% Defueling function for low pressure fuel pump

LV_DEFU_FTL = (CAN_FTL > C_FTL_MIN_DEFU) & ~LV_CAN_ERR_FTL
IF STATE_DEFU <> 'DEFU_RUN'
THEN
  IF ( LV_DEFU_EXT_REQ ...
     & ~LV_DEFU_EXT_REQ_OLD ...
     & ~LV_EFP ...
     )
  THEN
    STATE_DEFU = 'DEFU_RUN'
    IF LV_DEFU_FTL
    THEN
      T_STATE_DEFU = C_T_DEFU
    ELSE
      T_STATE_DEFU = C_T_DEFU_SHO
    END
  ELSE
    IF ( STATE_DEFU == 'DEFU_CNL' ...
       | STATE_DEFU == 'DEFU_END' ...
       )
    THEN
      IF T_STATE_DEFU == 0
      THEN
        IF LV_EFP
        THEN
          STATE_DEFU = 'NOT_ST'
        END
      ELSE
        T_STATE_DEFU = T_STATE_DEFU - 0.1
      END
    END
  END
ELSE
  IF ~LV_DEFU_FTL & LV_DEFU_FTL_OLD
  THEN
    STATE_DEFU = 'DEFU_CNL'
    T_STATE_DEFU = C_T_DEFU_WAIT_NOT_ST
  ELSE
    IF (~LV_DEFU_EXT_REQ) | (T_STATE_DEFU == 0)
    THEN
      STATE_DEFU = 'DEFU_END'
      T_STATE_DEFU = C_T_DEFU_WAIT_NOT_ST
    ELSE
      T_STATE_DEFU = T_STATE_DEFU - 0.1
    END
  END
END
LV_DEFU_ACT = (STATE_DEFU == 'DEFU_RUN')
LV_DEFU_EXT_REQ_OLD = LV_DEFU_EXT_REQ
LV_DEFU_FTL_OLD = LV_DEFU_FTL
```

Copyright ©Continental AG. Transmittal, reproduction, dissemination and/or editing of this document as well as utilisation of its contents and communication thereof to others without expressed authorisation are prohibited. Offenders will be held liable for payment of damages. All rights created by patent grant or registration of a utility model or design patent are reserved.

43.19.2 10ms task

General Information

Application Conditions

Initialisation:

```
on RST:
  EFPPWM_ACR_TEST = C_EFPPWM_DEAC
  T_DLY_EFP_ACR_TEST = 0
```

Activation: always

Deactivation: never

Recurrence: 10ms

Function Description

```
% Actuator test for low pressure fuel pump
IF LV_ACR_EFPPWM_TEST_REQ
THEN
  IF ( (EFPPWM_ACR_TEST < C_EFPPWM_MAX)
     & (T_DLY_EFP_ACR_TEST == 0)
     )
  THEN
    EFPPWM_ACR_TEST = EFPPWM_ACR_TEST + C_EFPPWM_ACR_TEST_INC
  ELSE
    IF T_DLY_EFP_ACR_TEST >= NC_T_DLY_EFP_ACR_TEST_MAX
    THEN
      EFPPWM_ACR_TEST = C_EFPPWM_DEAC
    ELSE
      T_DLY_EFP_ACR_TEST = T_DLY_EFP_ACR_TEST + 0.01
    END
  END
ELSE
  EFPPWM_ACR_TEST = C_EFPPWM_DEAC
  T_DLY_EFP_ACR_TEST = 0
END

% Interface adaptation for external intervention of BKS customer functionality
IF LC_EFPPWM_MAN_ACT
THEN
  EFPPWM_EXT_ADJ = C_EFPPWM_MAN_ACT
  LV_EFPPWM_EXT_ADJ = 1
ELSE
  IF LV_DEFU_ACT
  THEN
    EFPPWM_EXT_ADJ = C_DEFU_EFPPWM
    LV_EFPPWM_EXT_ADJ = 1
  ELSE
    IF LV_REFU_ACT
    THEN
      EFPPWM_EXT_ADJ = REFU_EFPPWM
      LV_EFPPWM_EXT_ADJ = 1
    ELSE
      IF LV_ACR_EFPPWM_TEST_REQ
      THEN
        EFPPWM_EXT_ADJ = EFPPWM_ACR_TEST
        LV_EFPPWM_EXT_ADJ = 1
      ELSE
        EFPPWM_EXT_ADJ = 0
        LV_EFPPWM_EXT_ADJ = 0
      END
    END
  END
END
```

Copyright ©Continental AG. Transmittal, reproduction, dissemination and/or editing of this document as well as utilisation of its contents and communication thereof to others without expressed authorisation are prohibited. Offenders will be held liable for payment of damages. All rights created by patent grant or registration of a utility model or design patent are reserved.

43.19.3 ACTION_FUSL_DefuExtReq

```
LV_DEFU_EXT_REQ = PRM_LV_DEFU_EXT_REQ
```

43.19.4 ACTION_FUSL_GetDefuRoutineStatu

```
SRV_31_ROUTINE_STATE = STATE_DEFU
```

Copyright ©Continental AG. Transmittal, reproduction, dissemination and/or editing of this document as well as utilisation of its contents and communication thereof to others without expressed authorisation are prohibited. Offenders will be held liable for payment of damages. All rights created by patent grant or registration of a utility model or design patent are reserved.

43.20 Fuel research octane number statistical quantification

Data Definition

Name	Mode	Coded Limits	Display Limits	Resolution	Unit
CTR_LOW_RON_ENA	V	0... 3FFH	0... 1023	1	-
Delay counter for activation of low RON detection					
LV_ENG_ST_CRIT_RON_DET	V	0... 1H	0 ...1	1	-
Engine has been started while gasoline octane RON index state was critical					
LV_TMR_RST_RON_DET	V	0... 1H	0 ...1	1	-
Reset the timer for counting time since gasoline octane RON index state is detected					
LV_TMR_RUN_RON_DET	V	0... 1H	0 ...1	1	-
Run timer for counting time since gasoline octane RON index state is detected					
STATE_CDN_RON_DET	V	0... 2H	0 ...2	1	-
Condition related with detected state of gasoline octane RON index 0: Keep state; 1: Activate next state; 2: Release current state					
STATE_RON	O/V/S	0H 1H 2H 3H	RON_OK LOW_RON_DETECTED LOW_RON_CONFIRMED RON_OUT_OF_RANGE	-	-
Fuel RON quality after last refuel					
T_STATE_ACT_RON_DET	V	0... FFFFH	0... 65.535	0.001	s
Time since a gasoline low octane RON index state is active					

Input Data

FAC_FTL_CHG_SAVE {p. 11577}	FCO_REFU {p. 11764}	IGA_CYL_KNK [NC_CYL_NR] {p. 22215}	IGA_MV_KNK_ADD {p. 22215}
IGA_TRA_KNK {p. 22144}	LV_FTL_REFU_RON_DET {p. 11578}	LV_LOW_RON_DET_ENA {p. 12184}	LV_MAF_TRA_KNK {p. 22165}
LV_N_TRA_KNK {p. 22165}	LV_ST_END {p. 7530}	LV_STATE_RON_OK_ENA {p. 12184}	MAF {p. 3012}
N_32 {p. 8079}	NC_CYL_NR {p. 1316}	T_SEG_AV {p. 8036}	TIA {p. 1143}

Calibration Data

Name	Mode	Coded Limits	Display Limits	Resolution	Unit
C_FAC_FTL_RLS_CRIT_RON_DET	-	0... FFH	0... 0.99609375	0.00390625	-
Refuel factor required for releasing of gasoline octane index state critical					
C_FCO_RLS_CRIT_RON_DET	-	0... FFFFH	0... 131.07	0.002	l
Fuel consumption since last refuel for releasing gasoline octane RON index state critical					
C_IGA_HYS_RLS_RON_DET	-	80... 7FH	-48... 47.625	0.375	°CRK
Ignition angle offset for releasing gasoline low octane RON index states					
C_IGA_OFS_CRIT_RON_DET	-	0... 80H	-48 ...0	0.375	°CRK
Ignition angle offset for confirming that gasoline has critical low octane RON index					
C_IGA_OFS_CYL_RON_DET	-	0... 80H	-48 ...0	0.375	°CRK

Copyright ©Continental AG. Transmittal, reproduction, dissemination and/or editing of this document as well as utilisation of its contents and communication thereof to others without expressed authorisation are prohibited. Offenders will be held liable for payment of damages. All rights created by patent grant or registration of a utility model or design patent are reserved.

Name	Mode	Coded Limits	Display Limits	Resolution	Unit
Individual cylinder ignition angle offset for low octane RON index detection					
C_IGA_OFS_LOW_RON_DET	-	0... 80H	-48 ...0	0.375	°CRK
Ignition angle offset for confirming that gasoline has low octane RON index					
C_STATE_RON_MAN	-	0H 1H 2H 3H	RON_OK LOW_RON_DETECTED LOW_RON_CONFIRMED RON_OUT_OF_RANGE	-	-
Calibration constant for manuel setting of STATE_RON					
C_T_LOW_RON_DET	-	0... FFFFH	0... 65.535	0.001	s
Time necessary for confirming that gasoline presents a critical low octane RON index					
C_T_OK_RON_DET	-	0... FFFFH	0... 65.535	0.001	s
Time necessary for confirming that gasoline presents symptoms of low octane RON index					
C_T_RLS_CRIT_RON_DET	-	0... FFFFH	0... 65.535	0.001	s
Time necessary for releasing gasoline octane RON index state critical					
C_T_RLS_LOW_RON_DET	-	0... FFFFH	0... 65.535	0.001	s
Time necessary for confirming that gasoline presents again the expected octane RON index					
C_T_RLS_SYM_LOW_RON_DET	-	0... FFFFH	0... 65.535	0.001	s
Time necessary for confirming that gasoline presents again only symptoms of low octane RON index					
C_T_SYM_LOW_RON_DET	-	0... FFFFH	0... 65.535	0.001	s
Time necessary for confirming that gasoline has a low octane RON index					
ID_CTR_LOW_RON_ENA	-	0... 3FFH	0... 1023	1	-
LDP_N_32_CTR_LOW_RON_ENA	4	0... FFH	0... 8160	32	rpm
Calibration value for delay counter for activation of low RON detection					
ID_MAF_MIN_LOW_RON_ENA	-	0... FFFFH	0... 1389	0.02119478	mg/stk
LDP_N_32_MAF_MIN_LOW_RON_ENA	8	0... FFH	0... 8160	32	rpm
Mass airflow threshold for activation of low RON detection					
IP_FAC_IGA_THD_LOW_RON_COR	-	0... C8H	0 ...2	0.01	-
LDP_N_32_FAC_IGA_THD_LOW_RON_COR	4	0... FFH	0... 8160	32	rpm
LDP_TIA_FAC_IGA_THD_LOW_RON_COR	4	0... FEH	-48... 142.5	0.75	°C
Correction factor to appreciate engine speed and TIA influence					
IP_IGA_THD_LOW_RON	-	0... 80H	-48 ...0	0.375	°CRK
LDPM_N_32_2_KNCK	NC_NR_N_32_2_KNCK	0... FFH	0... 8160	32	rpm
LDP_MAF_HB_FUSL	NC_NR_MAF_HB_2_KNCK	0... FFFFH	0... 1389	0.02119478	mg/stk
Ignition angle for considering that gasoline presents symptoms of low octane RON index					
LC_STATE_RON_MAN_ACT	-	0... 1H	0 ...1	1	-
Calibration switch for manual setting of STATE_RON					

Copyright ©Continental AG. Transmittal, reproduction, dissemination and/or editing of this document as well as utilisation of its contents and communication thereof to others without expressed authorisation are prohibited. Offenders will be held liable for payment of damages. All rights created by patent grant or registration of a utility model or design patent are reserved.

▶ General Information

The main issue of this function is to detect low gasoline octane, this is done with an request of calibratable thresholds. The quantification of the gasoline octane happened with the variable STATE_RON. This states and state transits are described in figure 1. The state transit has following three modes, keep state, activate next state or release current state.
The states are used in the module BOF2: Fuel research octane number diagnosis and there will be set the corresponding errors.

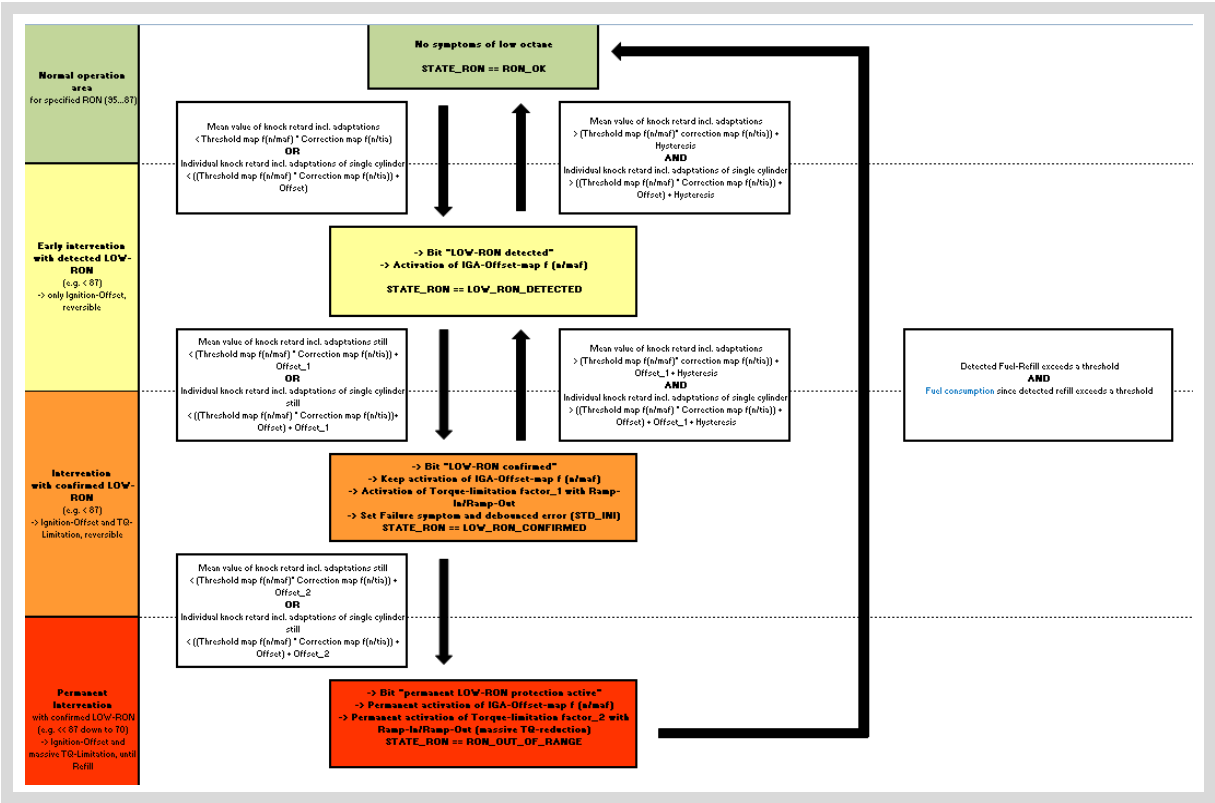

Figure 43.20.1:

▶ Application Conditions

Initialisation:

```
At NVMSTO: store STATE_RON
At NVMRES: read STATE_RON
At NVMINI: STATE_RON=RON_OK

At ES2ERU:
  IF    STATE_RON == RON_OUT_OF_RANGE /*3H*/
  THEN  LV_ENG_ST_CRIT_RON_DET = 1
  ELSE  LV_ENG_ST_CRIT_RON_DET = 0
  ENDIF

At activation:  Set all variables to zero, except for STATE_
RON
```

Activation:

```
LV_ST_END == 1              AND
LV_LOW_RON_DET_ENA == 1
```

Deactivation:

```
If activation condition not true
```

Copyright©Continental AG. Transmittal, reproduction, dissemination and/or editing of this document as well as utilisation of its contents and communication thereof to others without expressed authorisation are prohibited. Offenders will be held liable for payment of damages. All rights created by patent grant or registration of a utility model or design patent are reserved.

Recurrence: SEG

▶ Function Description

▶ Signal flow diagram:

43.20.1 Reset of variables at beginning of algorithm

```
STATE_CDN_RON_DET = 0
```

43.20.2 Symptoms of "possible Low octane (RON) Gasoline" state

```
IF STATE_RON == RON_OK
THEN
    IF  IGA_MV_KNK_ADD <  (IP_IGA_THD_LOW_RON[N_32,MAF] *...
                          IP_FAC_IGA_THD_LOW_RON_COR[N_32,TIA])
    OR one  IGA_CYL_KNK[0...NC_CYL_NR] < (IP_IGA_THD_LOW_RON[N_32,MAF] *...
                                  IP_FAC_IGA_THD_LOW_RON_COR[N_32,TIA] +...
                                  C_IGA_OFS_CYL_RON_DET)
    THEN
    STATE_CDN_RON_DET=1   /*Activate next state*/
    ELSE
    STATE_CDN_RON_DET=0  /*Keep state*/
    ENDIF
ENDIF
```

43.20.3 Symptoms for confirmation and release of "Low octane (RON) Gasoline" state

```
IF STATE_RON == LOW_RON_DETECTED
THEN
    IF  IGA_MV_KNK_ADD <  (IP_IGA_THD_LOW_RON[N_32,MAF] *...
                          IP_FAC_IGA_THD_LOW_RON_COR[N_32,TIA] +...
                          C_IGA_OFS_LOW_RON_DET)
    OR one  IGA_CYL_KNK[0...NC_CYL_NR] < (IP_IGA_THD_LOW_RON[N_32,MAF] *...
                                  IP_FAC_IGA_THD_LOW_RON_COR[N_32,TIA] +...
                                  C_IGA_OFS_CYL_RON_DET +...
                                  C_IGA_OFS_LOW_RON_DET)
    THEN
        STATE_CDN_RON_DET=1    /*Activate state*/
    ELSE
        IF  IGA_MV_KNK_ADD >  (IP_IGA_THD_LOW_RON[N_32,MAF] *...
                              IP_FAC_IGA_THD_LOW_RON_COR[N_32,TIA] +...
                              C_IGA_HYS_RLS_RON_DET)
        AND all IGA_CYL_KNK[0...NC_CYL_NR] >(IP_IGA_THD_LOW_RON[N_32,MAF] *...
                                  IP_FAC_IGA_THD_LOW_RON_COR[N_32,TIA] +...
                                  C_IGA_OFS_CYL_RON_DET +...
                                  C_IGA_HYS_RLS_RON_DET)
        THEN
            STATE_CDN_RON_DET=2       /*Release state*/
        ELSE
            STATE_CDN_RON_DET=0       /*Keep state*/
        ENDIF
    ENDIF
ENDIF
```

Copyright ©Continental AG. Transmittal, reproduction, dissemination and/or editing of this document as well as utilisation of its contents and communication thereof to others without expressed authorisation are prohibited. Offenders will be held liable for payment of damages. All rights created by patent grant or registration of a utility model or design patent are reserved.

43.20.4 Symptoms for "Gasoline with octane (RON) out of range"

```
IF STATE_RON == LOW_RON_CONFIRMED
THEN
    IF  IGA_MV_KNK_ADD <  (IP_IGA_THD_LOW_RON[N_32,MAF] *...
                          IP_FAC_IGA_THD_LOW_RON_COR[N_32,TIA] +...
                          C_IGA_OFS_CRIT_RON_DET)
    OR one IGA_CYL_KNK[0...NC_CYL_NR] < (IP_IGA_THD_LOW_RON[N_32,MAF] *...
                                  IP_FAC_IGA_THD_LOW_RON_COR[N_32,TIA] +...
                                  C_IGA_OFS_CYL_RON_DET +...
                                  C_IGA_OFS_CRIT_RON_DET)
    THEN
        STATE_CDN_RON_DET=1    /*Activate state*/
    ELSE
        IF  IGA_MV_KNK_ADD >  (IP_IGA_THD_LOW_RON[N_32,MAF] *...
                              IP_FAC_IGA_THD_LOW_RON_COR[N_32,TIA] +...
                              C_IGA_OFS_LOW_RON_DET +...
                              C_IGA_HYS_RLS_RON_DET)
        AND all IGA_CYL_KNK[0...NC_CYL_NR] > (IP_IGA_THD_LOW_RON[N_32,MAF] *...
                                   IP_FAC_IGA_THD_LOW_RON_COR[N_32,TIA] +...
                                   C_IGA_OFS_CYL_RON_DET +...
                                   C_IGA_OFS_LOW_RON_DET +...
                                   C_IGA_HYS_RLS_RON_DET)
       THEN
            STATE_CDN_RON_DET=2       /*Release state*/
        ELSE
            STATE_CDN_RON_DET=0       /*Keep state*/
        ENDIF
    ENDIF
ENDIF
```

43.20.5 Release conditions for "Gasoline with octane (RON) out of range"

```
IF  (LV_ENG_ST_CRIT_RON_DET == 1)
AND (
     (    LV_FTL_REFU_RON_DET == 1
      ANDFAC_FTL_CHG_SAVE >= C_FAC_FTL_RLS_CRIT_RON_DET
      AND  FCO_REFU >= C_FCO_RLS_CRIT_RON_DET
     )
     OR  LV_STATE_RON_OK_ENA == 1
    )
THEN
    STATE_CDN_RON_DET = 2    /*Release state*/
    ENDIF
```

Copyright ©Continental AG. Transmittal, reproduction, dissemination and/or editing of this document as well as utilisation of its contents and communication thereof to others without expressed authorisation are prohibited. Offenders will be held liable for payment of damages. All rights created by patent grant or registration of a utility model or design patent are reserved.

43.20.6 State machine for Low octane (RON) Gasoline management

The logical values for reset and run the timer of gasoline octane RON index state detected is set to zero.

The delay counter for activation of low RON detection is set to an calibratibal value to be an function of the engine speed, when the load dynamic function is active or the engine speed dynamic function is active or the value of the spark retard till high MAP_DRV1 applied to engine is smaller than zero.

The state condition is set to "keep state", if the air mass is smaller than a index table without interpolation dependent on the engine speed or the before described delay counter is not equal to zero.

```
LV_TMR_RST_RON_DET=0
LV_TMR_RUN_RON_DET=0

IF   LV_MAF_TRA_KNK == 1
OR   LV_N_TRA_KNK == 1
OR   IGA_TRA_KNK < 0
THEN   CTR_LOW_RON_ENA = ID_CTR_LOW_RON_ENA(N_32)
ELSE   CTR_LOW_RON_ENA = CTR_LOW_RON_ENA - 1
ENDIF

IF   MAF < ID_MAF_MIN_LOW_RON_ENA(N_32)
OR   CTR_LOW_RON_ENA <> 0
THEN   STATE_CDN_RON_DET = 0
ENDIF
```

In the following code the state machine for the fuel RON quality is described. The state can be set manually with C_STATE_RON_MAN, if the calibration switch, LC_STATE_RON_MAN_ACT, is set.
Otherwise the states will be set according to figure 1. To avoid toggling effects the state change is locked by an each state seperate calibratable time.
In the case of state RON_OUT_OF_RANGE is set back to RON_OK the logical flag for engine has been started while gasoline octane RON index was critical is reset.

```
IF LC_STATE_RON_MAN_ACT == 1
THEN   STATE_RON = C_STATE_RON_MAN
ELSE
SWITCH (STATE_RON)
    CASE RON_OK
            LV_TMR_RUN_RON_DET=1
              IF STATE_CDN_RON_DET==1
              AND T_STATE_ACT_RON_DET >= C_T_OK_RON_DET
              THEN
               STATE_RON = LOW_RON_DETECTED
               LV_TMR_RST_RON_DET=1
              ENDIF
    BREAK;

    CASE LOW_RON_DETECTED
            LV_TMR_RUN_RON_DET=1
              IF STATE_CDN_RON_DET==1
              AND   T_STATE_ACT_RON_DET>= C_T_SYM_LOW_RON_DET
              THEN
               STATE_RON = LOW_RON_CONFIRMED
               LV_TMR_RST_RON_DET=1
              IF STATE_CDN_RON_DET==2
           AND T_STATE_ACT_RON_DET >= C_T_RLS_SYM_LOW_RON_DET
              THEN
               STATE_RON = RON_OK
               LV_TMR_RST_RON_DET=1
```

Copyright ©Continental AG. Transmittal, reproduction, dissemination and/or editing of this document as well as utilisation of its contents and communication thereof to others without expressed authorisation are prohibited. Offenders will be held liable for payment of damages. All rights created by patent grant or registration of a utility model or design patent are reserved.

```
            ENDIF
    BREAK;



    CASE LOW_RON_CONFIRMED
            LV_TMR_RUN_RON_DET=1
              IF STATE_CDN_RON_DET==1
          AND T_STATE_ACT_RON_DET >= C_T_LOW_RON_DET
              THEN
               STATE_RON = RON_OUT_OF_RANGE
               LV_TMR_RST_RON_DET=1
              IF STATE_CDN_RON_DET==2
          AND T_STATE_ACT_RON_DET >= C_T_RLS_LOW_RON_DET
              THEN
               STATE_RON = LOW_RON_DETECTED
               LV_TMR_RST_RON_DET=1
              ENDIF
    BREAK;



    CASE RON_OUT_OF_RANGE
            LV_TMR_RUN_RON_DET=1
              IF STATE_CDN_RON_DET==2
              AND T_STATE_ACT_RON_DET >= C_T_RLS_CRIT_RON_DET
              THEN
               STATE_RON = RON_OK
               LV_ENG_ST_CRIT_RON_DET = 0
               LV_TMR_RST_RON_DET = 1
              ENDIF
    BREAK;
END SWITCH
ENDIF
```

43.20.7 Time Control

In order to avoid toggling effects a timer is included. This timer counts the time since a new state was reached. It is only allowed to set another state, if a calibratable time has expired.

```
IF LV_TMR_RST_RON_DET==1
THEN
    T_STATE_ACT_RON_DET=0
ENDIF

IF LV_TMR_RUN_RON_DET==1
THEN
    T_STATE_ACT_RON_DET=T_STATE_ACT_RON_DET + T_SEG_AV;
ENDIF
```

Copyright ©Continental AG. Transmittal, reproduction, dissemination and/or editing of this document as well as utilisation of its contents and communication thereof to others without expressed authorisation are prohibited. Offenders will be held liable for payment of damages. All rights created by patent grant or registration of a utility model or design patent are reserved.

43.21 Fuel research octane number statistical quantification (Appl. Inc.)

Data Definition

Name	Mode	Coded Limits	Display Limits	Resolution	Unit
LV_INH_CBMD_LOW_RON	V/S	0... 1H	0 ...1	1	-
Inhibition for combustion mode manager caused by detected low research octane number (RON)					

Input Data

NC_IDX_INH_HPDI_FQ {p. 1661}	STATE_RON {p. 12128}	STATE_RON_OLD {p. 12248}	

Calibration Data

Name	Mode	Coded Limits	Display Limits	Resolution	Unit
C_STATE_RON_CBMD_INH	V	0H 1H 2H 3H	RON_OK LOW_RON_DETECTED LOW_RON_CONFIRMED RON_OUT_OF_RANGE	-	-
State of research octane number to inhibit combustion modes					
C_STATE_RON_CBMD_INH_OLD	V	0H 1H 2H 3H	RON_OK LOW_RON_DETECTED LOW_RON_CONFIRMED RON_OUT_OF_RANGE	-	-
State of research octane number to inhibit combustion modes, old value for edge detection					
C_STATE_RON_CBMD_RLS	V	0H 1H 2H 3H	RON_OK LOW_RON_DETECTED LOW_RON_CONFIRMED RON_OUT_OF_RANGE	-	-
State of research octane number to release combustion modes					
C_STATE_RON_CBMD_RLS_OLD	V	0H 1H 2H 3H	RON_OK LOW_RON_DETECTED LOW_RON_CONFIRMED RON_OUT_OF_RANGE	-	-
State of research octane number to release combustion modes, old value for edge detection					

Copyright ©Continental AG. Transmittal, reproduction, dissemination and/or editing of this document as well as utilisation of its contents and communication thereof to others without expressed authorisation are prohibited. Offenders will be held liable for payment of damages. All rights created by patent grant or registration of a utility model or design patent are reserved.

▶ Import actions:

ACTION_CBMD_ClrInh(IN <PRM_IDX_CMB_INH>)
ACTION_CBMD_SetInh(IN <PRM_IDX_CMB_INH>)

▶ General Information

This function requests for inhibition of HPDI mode in case of detected low research octane number (RON).

Inhibition is requested dependent to calibratable thresholds (rising edge of state transition for STATE_RON is awaited).
Inhibition information is stored by LV_INH_CBMD_LOW_RON to activate inhibition after ECU reset. Release is managed
by calibratable thresholds (falling edge of state transition for STATE_RON is awaited).

▶ Application Conditions

Initialisation:

```
At NVMSTO: store LV_INH_CBMD_LOW_RON
At NVMRES: read LV_INH_CBMD_LOW_RON
At NVMINI: LV_INH_CBMD_LOW_RON = 0

At ES2ERU: IF   LV_INH_CBMD_LOW_RON == 1
           THENACTION_CBMD_SetInh(NC_IDX_INH_HPDI_FQ)
           ENDIF
```

Activation: `LV_ST_END == 1`

Deactivation: `If activation condition is not true`

Recurrence: `SEG`

▶ Function Description

```
IF    (STATE_RON_OLD == C_STATE_RON_CBMD_INH_OLD)
AND   (STATE_RON == C_STATE_RON_CBMD_INH)
THEN   LV_INH_CBMD_LOW_RON = 1
      ACTION_CBMD_SetInh(NC_IDX_INH_HPDI_FQ)
ENDIF

IF    (STATE_RON_OLD == C_STATE_RON_CBMD_RLS_OLD)
AND   (STATE_RON == C_STATE_RON_CBMD_RLS)
THENLV_INH_CBMD_LOW_RON = 0
      ACTION_CBMD_ClrInh(NC_IDX_INH_HPDI_FQ)
ENDIF
```

Copyright ©Continental AG. Transmittal, reproduction, dissemination and/or editing of this document as well as utilisation of its contents and communication thereof to others without expressed authorisation are prohibited. Offenders will be held liable for payment of damages. All rights created by patent grant or registration of a utility model or design patent are reserved.

43.22 Fuel pump low pressure diagnosis

▶ Data Definition

Name	Mode	Coded Limits	Display Limits	Resolution	Unit
ABC_EFPPWM_FB_A	V	0... FFH	0... 255	1	-
Antibounce counter for EFP failure feedback diagnosis. Failure feedback number 1-4					
ABC_EFPPWM_FB_B	V	0... FFH	0... 255	1	-
Antibounce counter for EFP failure feedback diagnosis. Failure feedback number 5-8					
CDN_DIAG_EFPPWM	V	0... 7H	0 ...7	1	-
Diagnosis condition for each symptom of EFPPWM					
CDN_DIAG_EFPPWM_BAS	V	0... 7H	0 ...7	1	-
Primary diagnosis condition read from the infrastructure for each symptom of EFPPWM					
ERR_DIAG_EFPPWM	V	0... 7H	0 ...7	1	-
Raw value of error symptom for EFPPWM detected on interface ECU and EFP control unit					
ERR_EFPPWM_FB	V	0... FFH	0... 255	1	-
This state displays the actual failure status of the failure feedback coming from the EFP control unit					
ERR_EFPPWM_FB_CONF	-	0... FFH	0... 255	1	-
Configuration of supported failures within ERR_EFPPWM_FB					
ERR_SYM_EFPPWM	V	0H 1H 2H 4H 8H	NO_SYM SYM_0 SYM_1 SYM_2 SYM_3	-	-
Error symptom EFP diagnosis					
ERR_SYM_EFPPWM_FB_A	V	0H 1H 2H 4H 8H	NO_SYM SYM_0 SYM_1 SYM_2 SYM_3	-	-
Error symptom EFP failure feedback diagnosis. Failure feedback number 1-4					
ERR_SYM_EFPPWM_FB_B	V	0H 1H 2H 4H 8H	NO_SYM SYM_0 SYM_1 SYM_2 SYM_3	-	-
Error symptom EFP failure feedback diagnosis. Failure feedback number 5-8					
LV_CDN_DIAG_EFPPWM	V	0... 1H	0 ...1	1	-
Diagnosis condition EFP diagnosis					
LV_CDN_DIAG_EFPPWM_FB_A	V	0... 1H	0 ...1	1	-
Diagnosis condition EFP failure feedback diagnosis. Failure feedback number 1-4					
LV_CDN_DIAG_EFPPWM_FB_B	V	0... 1H	0 ...1	1	-
Diagnosis condition EFP failure feedback diagnosis. Failure feedback number 5-8					
LV_EFPPWM_FB_VLD	V	0... 1H	0 ...1	1	-
If LV_EFPPWM_FB_VLD = 1 the failure number ERR_EFPPWM_FB (01H-80H) is valid					
LV_END_DIAG_EFPPWM	V	0... 1H	0 ...1	1	-
End of diagnosis EFP diagnosis					
LV_END_DIAG_EFPPWM_FB_A	O/V	0... 1H	0 ...1	1	-
End of diagnosis EFP failure feedback diagnosis. Failure feedback number 1-4					
LV_END_DIAG_EFPPWM_FB_B	V	0... 1H	0 ...1	1	-

Copyright ©Continental AG. Transmittal, reproduction, dissemination and/or editing of this document as well as utilisation of its contents and communication thereof to others without expressed authorisation are prohibited. Offenders will be held liable for payment of damages. All rights created by patent grant or registration of a utility model or design patent are reserved.

Name	Mode	Coded Limits	Display Limits	Resolution	Unit
End of diagnosis EFP failure feedback diagnosis. Failure feedback number 5-8					
LV_ERR_EFPPWM	O/V	0... 1H	0 ...1	1	-
Boolean for error currently present on EFP command signal					
LV_ERR_EFPPWM_FB_A	O/V	0... 1H	0 ...1	1	-
Error currently present, indicated by failure feedback from EFP control unit. Failure feedback number 1-4					
LV_ERR_EFPPWM_FB_B	O/V	0... 1H	0 ...1	1	-
Error currently present, indicated by failure feedback from EFP control unit. Failure feedback number 5-8					
LV_INH_ERR_EFPPWM	V	0... 1H	0 ...1	1	-
Inhibition of the powerstage diagnosis for electrical fuel pump					
LV_INH_ERR_EFPPWM_FB	V	0... 1H	0 ...1	1	-
Inhibition of the powerstage feedback diagnosis for electrical fuel pump					
STATE_EFPPWM_FB	V	0... 4H	0 ...4	1	-
STATE of failure feedback recognition					
T_ACT_EFPPWM_FB	V	0... FFFFH	0... 1310.7	0.02	s
Time with EFPPWM > C_EFPPWM_MIN_FB necessary to have failure feedback from EFP control unit					
T_EFPPWM_ECU	V	0... FFH	0... 5100	20	ms
Timer counting t(pwm) for failure feedback recognition					
T_EFPPWM_FB	V	0... FFH	0... 5100	20	ms
Timer counting tlow for failure feedback recognition					

Input Data

EFPPWM {p. 11807}	LV_IGK {p. 24082}	LV_VAR_EFPPWM_FRQ {p. 24740}	STATE_VAR_EFP {p. 24743}
VB {p. 24055}			

Calibration Data

Name	Mode	Coded Limits	Display Limits	Resolution	Unit
C_ABC_EFPPWM_FB	V	1... FFH	1... 255	1	-
If C_ABC_EFPPWM_FB times sequentially a failure feedback of the same group (A or B) is detected, the failure LV_ERR_EFPPWM_FB_A/B is set.					
C_ABC_INC_EFPPWM	V	0... FFH	0... 255	1	-
Antibounce counter increment					
C_ABC_MAX_EFPPWM	V	1... FFH	1... 255	1	-
Maximum value for antibounce counter					
C_EFPPWM_DIAG_MAX	V	0... FFH	0... 99.609375	0.390625	%
Maximum duty cycle threshold of EFPPWM for electrical EFP diagnosis					
C_EFPPWM_DIAG_MIN	V	0... FFH	0... 99.609375	0.390625	%
Minimum duty cycle threshold of EFPPWM for electrical EFP diagnosis					
C_EFPPWM_MIN_FB	V	0... FFH	0... 99.609375	0.390625	%
Minimum duty cycle of EFPPWM to have failure feedback from EFP control unit					
C_ERR_EFPPWM_FB_CONF_1	V	0... FFH	0... 255	1	-
Supported failures for STATE_VAR_EFP = 00H or 01H (1 EFP connected to EFP control unit)					
C_ERR_EFPPWM_FB_CONF_2	V	0... FFH	0... 255	1	-

Copyright ©Continental AG. Transmittal, reproduction, dissemination and/or editing of this document as well as utilisation of its contents and communication thereof to others without expressed authorisation are prohibited. Offenders will be held liable for payment of damages. All rights created by patent grant or registration of a utility model or design patent are reserved.

Name	Mode	Coded Limits	Display Limits	Resolution	Unit
STATE_VAR_EFP = 02H or 03H (2 EFP connected to EFP control unit)					
C_T_ACT_EFPPWM_FB	V	0... FFFFH	0... 1310.7	0.02	s
Minimum time necessary to have failure feedback from EFP control unit					
C_T_EFPPWM_ECU	V	0... FFH	0... 5100	20	ms
Time t(PWM) during failure feedback					
C_T_EFPPWM_FB_OFS	V	0... FFH	0... 5100	20	ms
Time difference between two failures used for failure feedback					
C_T_EFPPWM_FB_WIN	V	0... FFH	0... 5100	20	ms
Time window for failures identification used for failure feedback					
C_VB_MIN_EFPPWM_FB	V	0... FFH	0... 25.8984375	0.1015625	V
Minimum VB necessary for failure feedback recognition activatation					
LC_EFPPWM_FB_TRAN_6	V	0... 1H	0 ...1	1	-
0: transition T6 is enable / 1: transition T6 is disable, T5 is always used					
LC_VAR_EFPPWM_FB	V	0... 1H	0 ...1	1	-
Defines reset behaviour of T_ACT_EFPPWM_FB (0: no init on IGKON, 1: init on IGKON).					

Configuration Data

Name	Mode	Coded Limits	Display Limits	Resolution	Unit
NC_FID_ERR_EFPPWM	-	0... FFFFH	0... 65535	1	-
Run the powerstage diagnosis for electrical fuel pump					
NC_FID_ERR_EFPPWM_FB	-	0... FFFFH	0... 65535	1	-
Run the powerstage feedback diagnosis for electrical fuel pump					
NC_IDX_ERR_EFPPWM_FB_A_INT	-	1... FFFFH	1... 65535	1	-
failure feedback diagnosis of EFP control unit for failure feedback number 1					
NC_IDX_ERR_EFPPWM_FB_A_PUMP_1	-	1... FFFFH	1... 65535	1	-
failure feedback diagnosis of EFP control unit for failure feedback number 2					
NC_IDX_ERR_EFPPWM_FB_A_PUMP_2	-	1... FFFFH	1... 65535	1	-
failure feedback diagnosis of EFP control unit for failure feedback number 3					
NC_IDX_ERR_EFPPWM_FB_A_VB	-	1... FFFFH	1... 65535	1	-
failure feedback diagnosis of EFP control unit for failure feedback number 4					
NC_IDX_ERR_EFPPWM_FB_B_1	-	1... FFFFH	1... 65535	1	-
failure feedback diagnosis of EFP control unit for failure feedback number 5					
NC_IDX_ERR_EFPPWM_FB_B_2	-	1... FFFFH	1... 65535	1	-
failure feedback diagnosis of EFP control unit for failure feedback number 6					
NC_IDX_ERR_EFPPWM_FB_B_3	-	1... FFFFH	1... 65535	1	-
failure feedback diagnosis of EFP control unit for failure feedback number 7					
NC_IDX_ERR_EFPPWM_FB_B_4	-	1... FFFFH	1... 65535	1	-
failure feedback diagnosis of EFP control unit for failure feedback number 8					
NC_IDX_ERR_EFPPWM_OC	-	1... FFFFH	1... 65535	1	-
EFPPWM diagnosis - open circuit					
NC_IDX_ERR_EFPPWM_SCG	-	1... FFFFH	1... 65535	1	-
EFPPWM diagnosis - short circuit to ground					
NC_IDX_ERR_EFPPWM_SCP	-	1... FFFFH	1... 65535	1	-
EFPPWM diagnosis - short circuit to plus					
NC_PSD_DLY_EFPPWM	V	1... FH	1... 15	1	-
Number of recurrences with diagnosis deactivation after diagnosis activation conditions are met (typical 2)					

Copyright ©Continental AG. Transmittal, reproduction, dissemination and/or editing of this document as well as utilisation of its contents and communication thereof to others without expressed authorisation are prohibited. Offenders will be held liable for payment of damages. All rights created by patent grant or registration of a utility model or design patent are reserved.

Import actions:

ACTION_ERRM_FilterMulticondtion(**IN** <PRM_CDN_DIAG_EFPPWM>, **IN** <PRM_ERR_DIAG_EFPPWM>, **IN** <PRM_EFPPWM>, **IN** <PRM_C_ABC_INC_EFPPWM>, **IN** <PRM_C_ABC_MAX_EFPPWM>, **OUT** <PRM_LV_ERR_EFPPWM>)
ACTION_FARM_GetPermission(**IN** <PRM_FID>, **OUT** <PRM_LV_PRMS>)
ACTION_INFR_GetElDiagEfp(**OUT** <PRM_CDN_DIAG_EFP>, **OUT** <PRM_ERR_DIAG_EFP>)
ACTION_INFR_SetFrqPwmEfp(**IN** <PRM_FRQ_PWM_EFP>)

Error treatment

Failure Identifier	Symptom Description	Nr	OBD Sym DTC	Filter Type	CARB class
Failure Description	**Diagnostic Description**				
EFPPWM	NC_IDX_ERR_EFPPWM_SCP	0		STD_INI	CC
EFPPWM Diagnostic	*EFPPWM diagnosis - short circuit to plus*				
	NC_IDX_ERR_EFPPWM_SCG	1			
	EFPPWM diagnosis - short circuit to ground				
	NC_IDX_ERR_EFPPWM_OC	2			
	EFPPWM diagnosis - open circuit				
		3			

Definition of the behavior of the initialization				
ERR-Flag		**Reset at ECU Reset**	**reset at Key ON**	**Latch error on fail**
		YES	YES	NO
ABC	**ABC-class**	**MAX-INC after Failure**	**No Reset at NEWDC**	**Init on Condition Loss**
	ABC	NO	NO	NO
Description of the implementation				
	prestore FRF	**RBM**	**Similar conditions**	
	-	-		

Failure Identifier	Symptom Description	Nr	OBD Sym DTC	Filter Type	CARB class
Failure Description	**Diagnostic Description**				
EFPPWM_FB_A	NC_IDX_ERR_EFPPWM_FB_A_INT	0		NO	CC
failure feedback diagnosis of EFP control unit for failure feedback number 1-4	*failure feedback diagnosis of EFP control unit for failure feedback number 1*				
	NC_IDX_ERR_EFPPWM_FB_A_PUMP_1	1			
	failure feedback diagnosis of EFP control unit for failure feedback number 2				
	NC_IDX_ERR_EFPPWM_FB_A_PUMP_2	2			

Copyright ©Continental AG. Transmittal, reproduction, dissemination and/or editing of this document as well as utilisation of its contents and communication thereof to others without expressed authorisation are prohibited. Offenders will be held liable for payment of damages. All rights created by patent grant or registration of a utility model or design patent are reserved.

Failure Identifier	Symptom Description	Nr	OBD Sym DTC	Filter Type	CARB class
Failure Description	**Diagnostic Description**				
	failure feedback diagnosis of EFP control unit for failure feedback number 3				
	NC_IDX_ERR_EFPPWM_FB_A_VB	3			
	failure feedback diagnosis of EFP control unit for failure feedback number 4				

Definition of the behavior of the initialization				
ERR-Flag		Reset at ECU Reset	reset at Key ON	Latch error on fail
		-	-	-
ABC	ABC-class	MAX-INC after Failure	No Reset at NEWDC	Init on Condition Loss
	NO-FIL	-	-	-
Description of the implementation				
	prestore FRF	RBM	Similar conditions	
	-	-		

Failure Identifier	Symptom Description	Nr	OBD Sym DTC	Filter Type	CARB class
Failure Description	**Diagnostic Description**				
EFPPWM_FB_B	NC_IDX_ERR_EFPPWM_FB_B_1	0		NO	CC
failure feedback diagnosis of EFP control unit for failure feedback number 5-8	*failure feedback diagnosis of EFP control unit for failure feedback number 5*				
	NC_IDX_ERR_EFPPWM_FB_B_2	1			
	failure feedback diagnosis of EFP control unit for failure feedback number 6				
	NC_IDX_ERR_EFPPWM_FB_B_3	2			
	failure feedback diagnosis of EFP control unit for failure feedback number 7				
	NC_IDX_ERR_EFPPWM_FB_B_4	3			
	failure feedback diagnosis of EFP control unit for failure feedback number 8				

Definition of the behavior of the initialization				
ERR-Flag		Reset at ECU Reset	reset at Key ON	Latch error on fail
		-	-	-
ABC	ABC-class	MAX-INC after Failure	No Reset at NEWDC	Init on Condition Loss
	NO-FIL	-	-	-
Description of the implementation				
	prestore FRF	RBM	Similar conditions	
	-	-		

▶ General Information

Copyright ©Continental AG. Transmittal, reproduction, dissemination and/or editing of this document as well as utilisation of its contents and communication thereof to others without expressed authorisation are prohibited. Offenders will be held liable for payment of damages. All rights created by patent grant or registration of a utility model or design patent are reserved.

This module contains the diagnostic of the low pressure Electrical Fuel Pump (EFP). The low pressure fuel pump (EFP) delivers the required fuel pressure and mass fuel flow to the high pressure system (High pressure pump, rail, injectors).

The diagnostic is done in several ways, in order to detect any malfunction that could endanger the correct behaviour of the engine caused by EFP. On one side the regular electrical diagnosis is performed on the ATIC that is driving the fuel pump command, on the other side the fuel pump electronic control unit is able to inform the engine control unit(ECU) about faults related to fuel pump system, both the EFP command and diagnostic are done by one single wire using one ECU pin.

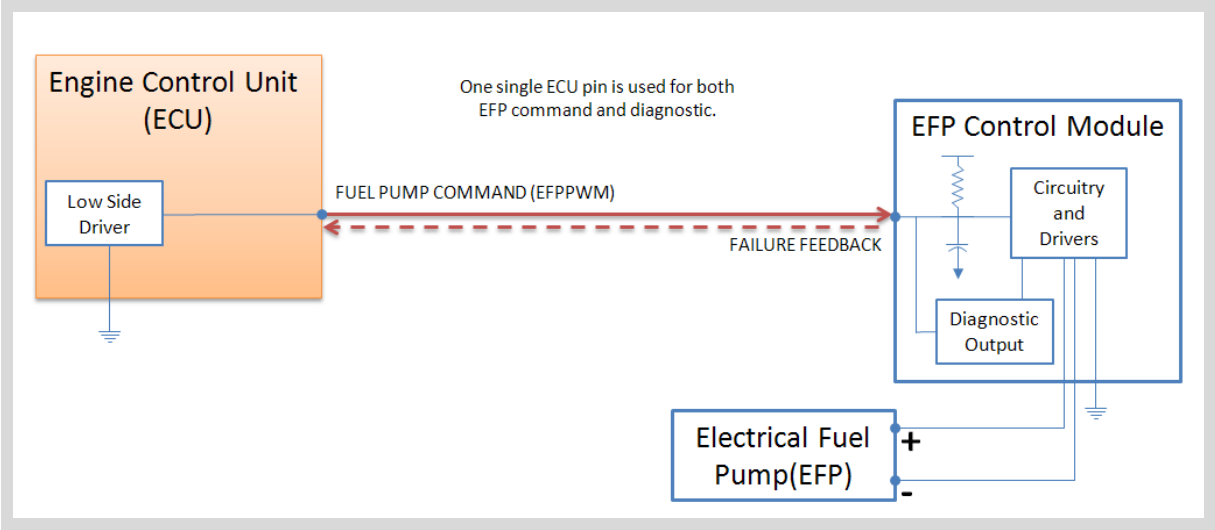

Figure 43.22.1:

The diagnosis of the EFP consists of:

1.1 Configuration of EFP parameters (variant coding)

In this section two EFP parameters are described :

- ERR_EFPPWM_FB_CONF: shows the EFP **feedback configuration** (for 1 or 2 pumps connected, depending on the engine configuration)
- ACTION_INFR_SetFrqPwmEfp: selects the EFP **operating frequency** (20Hz or 100Hz)

The calculation of these parameters is done only at reset, this means that each time a change is performed, the ECU should be powered down, at power up the results will be visible.

1.2. Hardware electrical diagnostic

In this section the function **ACTION_INFR_GetElDiagEfp(**CDN_DIAG_EFPPWM_BAS, ERR_DIAG_EFPPWM**)**is called, it returns the result of the electrical diagnostic made by the hardware of the ECU. The electronics is able to return two diagnostic parameters:

- CDN_DIAG_EFPPWM_BAS (the condition to run the diagnostic)
- ERR_DIAG_EFPPWM (the result of the diagnostic: 'Short circuit to plus', 'Short circuit to ground' and 'Open Load').

1.3. Failure feedback recognition

One single wire is used for both pump command and diagnostic feedback like it can be seen on the schematics, therefore we need to distinguish between diagnostic information and PWM signal for EFP control. When a failure is detected by the EFP Control Module the command line will be

Copyright ©Continental AG. Transmittal, reproduction, dissemination and/or editing of this document as well as utilisation of its contents and communication thereof to others without expressed authorisation are prohibited. Offenders will be held liable for payment of damages. All rights created by patent grant or registration of a utility model or design patent are reserved.

pulled to ground describing a defined pattern, in this way the ECU will know that the command line will be used as diagnostic feedback information line. There are 3 possible states for the failure feedback interpretation:

- no failure feedback recognized
- failure feedback possible
- failure feedback recognized

1.4. EFP diagnostic (PWM)

When no failure feedback recognition is possible and certain conditions are full-filled (no inhibition active, battery voltage above a threshold, EFPPWM between certain limits), the electrical diagnosis of the PWM signal is done, the calculation of the corresponding diagnostic symptoms is based on the parameters calculated in section 1.2: CDN_DIAG_EFPPWM_BAS, ERR_DIAG_EFPPWM.

1.5. Failure feedback diagnostic

If a failure is detected by the fuel pump control unit, a failure feedback is send to the ECU. Depending on the pattern of the feedback signal the ECU is able to detect up to 8 different failures.
The diagnostic of the feedback signal is performed only if there is no inhibition active (LV_INH_ERR_EFPPWM_FB=0) and battery voltage is above a calibration threshold.

43.22.1 Determination of variant coding influence for electric fuel pump diagnosis

▶ General Information

(1)For the EFP control unit the variant of the EFP (STATE_VAR_EFP), is used to configure the failure feedback algorithm by ERR_EFPPWM_FB_CONF:

- STATE_VAR_EFP = 00H or 01H (1 EFP connected to EFP control unit)-> manual configuration_1
- STATE_VAR_EFP = 02H or 03H (2 EFP connected to EFP control unit)-> manual configuration_2

(2)Additionally the EFP operating frequency is set in order to get the right PWM command signal(EFPPWM) for the fuel pump that is used for the current engine variant. Depending on the value of a bit set by the variant coding configuration, two operating frequencies are supported:
- LV_VAR_EFPPWM_FRQ = 0 -> 20Hz
- LV_VAR_EFPPWM_FRQ = 1 -> 100Hz

▶ Application Conditions

Initialisation:

```
at reset:

If(1) STATE_VAR_EFP = 00H or 01H  (1 EFP connected to EFP control
unit)
   Then(1)  ERR_EFPPWM_FB_CONF = C_ERR_EFPPWM_FB_CONF_1
   ElseIf  STATE_VAR_EFP = 02H or 03H (2 EFP connected to EFP
control unit)
          Then ERR_EFPPWM_FB_CONF = C_ERR_EFPPWM_FB_CONF_2
          Else ERR_EFPPWM_FB_CONF =0
       Endif
Endif(1)

If(2)  LV_VAR_EFPPWM_FRQ = 1
   Then(2) ACTION_INFR_SetFrqPwmEfp(64h)(64h=100Hz EFP operating
frequency)
   Else(2) ACTION_INFR_SetFrqPwmEfp(14h)(14h= 20Hz EFP operating
frequency)
Endif(2)
```

Copyright©Continental AG. Transmittal, reproduction, dissemination and/or editing of this document as well as utilisation of its contents and communication thereof to others without expressed authorisation are prohibited. Offenders will be held liable for payment of damages. All rights created by patent grant or registration of a utility model or design patent are reserved.

Activation: –

Deactivation: –

Recurrence: –

▶ **Function Description**

No calculation is done recursively, after each calibration change the ECU needs to be powered down and up, because calculation is done only once per driving cycle at reset.

43.22.2 Diagnostic information from infrastructure

▶ **General Information**

Description:
The EFP control unit is controlled by a PWM signal line driven by the ATIC 39. The hardware can distinguish between three symptoms: 'Short circuit to Vbatt', 'Short circuit to GND' and 'Open Load'.

This function reads the failure information (ERR_DIAG_EFPPWM) from the infrastructure. Depending on the used frequency of the PWM signal the recurrence of reading the failure information has to change to ensure to get correct failure information

- LV_VAR_EFPPWM_FRQ = 0 -> 20 Hz -> calculation is done at 100ms
- LV_VAR_EFPPWM_FRQ = 1 -> 100Hz -> calculation is done at 20ms

▶ **Application Conditions**

Initialisation:

```
at reset:
CDN_DIAG_EFPPWM_BAS = 0
ERR_DIAG_EFPPWM = 0
```

Activation: `every engine state`

Deactivation: –

Recurrence:

```
at reset:
If LV_VAR_EFPPWM_FRQ = 1
    Then    20 ms recurrence
    Else    100 ms recurrence
Endif
```

▶ **Function Description**

```
Usage of the diagnosis information(failure symptoms ERR_DIAG_EFPPWM and diagnosis
conditions CDN_DIAG_EFPPWM_BAS) received from the infrastructure:
```

- `CDN_DIAG_EFPPWM_BAS –`
  `Diagnosis conditions are set according infrastructure information (basic software(BSW) output)`
- `ERR_DIAG_EFPPWM –`
  `Failure symptoms are set according infrastructure information (basic software(BSW) output)`

```
Call of function:
ACTION_INFR_GetElDiagEfp (OUT CDN_DIAG_EFPPWM_BAS,OUT ERR_DIAG_EFPPWM)
```

Copyright ©Continental AG. Transmittal, reproduction, dissemination and/or editing of this document as well as utilisation of its contents and communication thereof to others without expressed authorisation are prohibited. Offenders will be held liable for payment of damages. All rights created by patent grant or registration of a utility model or design patent are reserved.

43.22.3 EFP control unit: Failure feedback recognition

▶ General Information

If a failure is detected by the EFP control unit, a failure feedback is sent to the ECU by pulling the signal line (interface between ECU and EFP control unit) to ground reproducing a well defined pattern.

The time t_{low} gives an information about the failure number. A complete failure feedback is detected if also the specific time t_{PWM} is detected, like described in the image below:

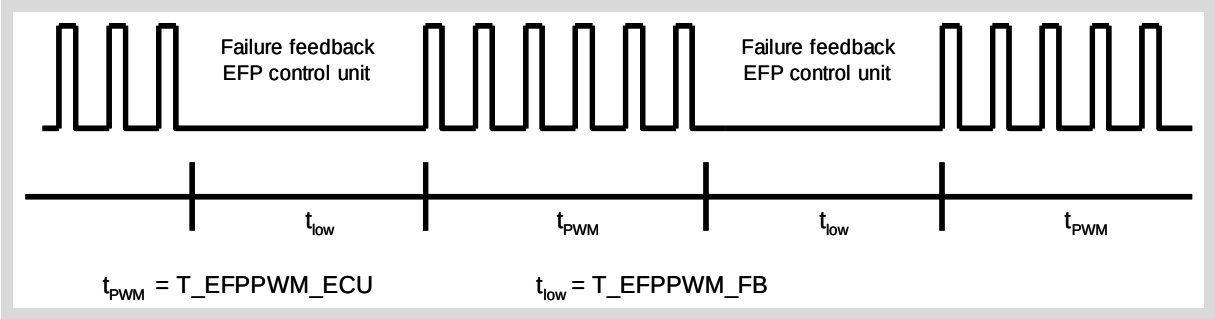

Figure 43.22.2:

Description:

According the failure feedback received from the EFP control unit, different failures can be distinguished.
A failure is identified by a specific t_{low} time (T_EFPPWM_FB). The time is defined by the time difference between two failures (C_T_EFPPWM_FB_OFS). For a good accuracy a failure recognition window is defined with C_T_EFPPWM_FB_WIN. The supported failures are set by ERR_EFPPWM_FB_CONF.

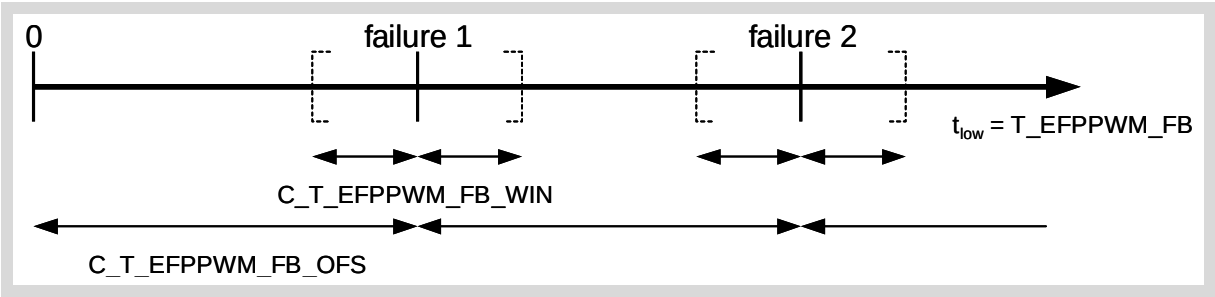

Figure 43.22.3:

Additional to the specific time t_{low} a failure feedback also consists of a specific time t_{PWM}. This time is defined by the absolute time C_T_EFPPWM_ECU. For a good accuracy a window is defined with C_T_EFPPWM_FB_WIN.

Copyright ©Continental AG. Transmittal, reproduction, dissemination and/or editing of this document as well as utilisation of its contents and communication thereof to others without expressed authorisation are prohibited. Offenders will be held liable for payment of damages. All rights created by patent grant or registration of a utility model or design patent are reserved.

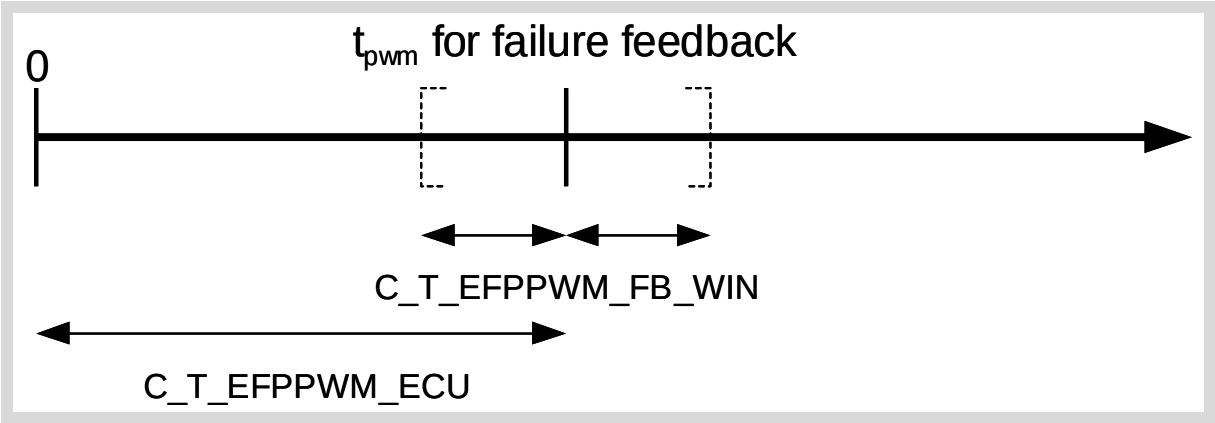

Figure 43.22.4:

For the recognition of the failure feedback the information, if a failure "short circuit to ground" is detected on the signal line between ECU and EFP control unit is used.
Three different information are calculated by this state machine:

- no failure feedback recognized:
  ERR_EFPPWM_FB = 00h
- failure feedback possible:
  ERR_EFPPWM_FB = FFh
  Or ERR_EFPPWM_FB = 01h...80h with LV_EFPPWM_FB_VLD = 0
- failure feedback recognized => valid failure number available
  ERR_EFPPWM_FB = 01h...80h with LV_EFPPWM_FB_VLD = 1
  This information is available for one recurrence.

The failure feedback validation is done on the transition T4. If also at this event the time T_EFPPWM_ECU necessary for failure feedback recognition, is identified, the failure feedback is valid (LV_EFPPWM_FB_VLD = 1).

Copyright ©Continental AG. Transmittal, reproduction, dissemination and/or editing of this document as well as utilisation of its contents and communication thereof to others without expressed authorisation are prohibited. Offenders will be held liable for payment of damages. All rights created by patent grant or registration of a utility model or design patent are reserved.

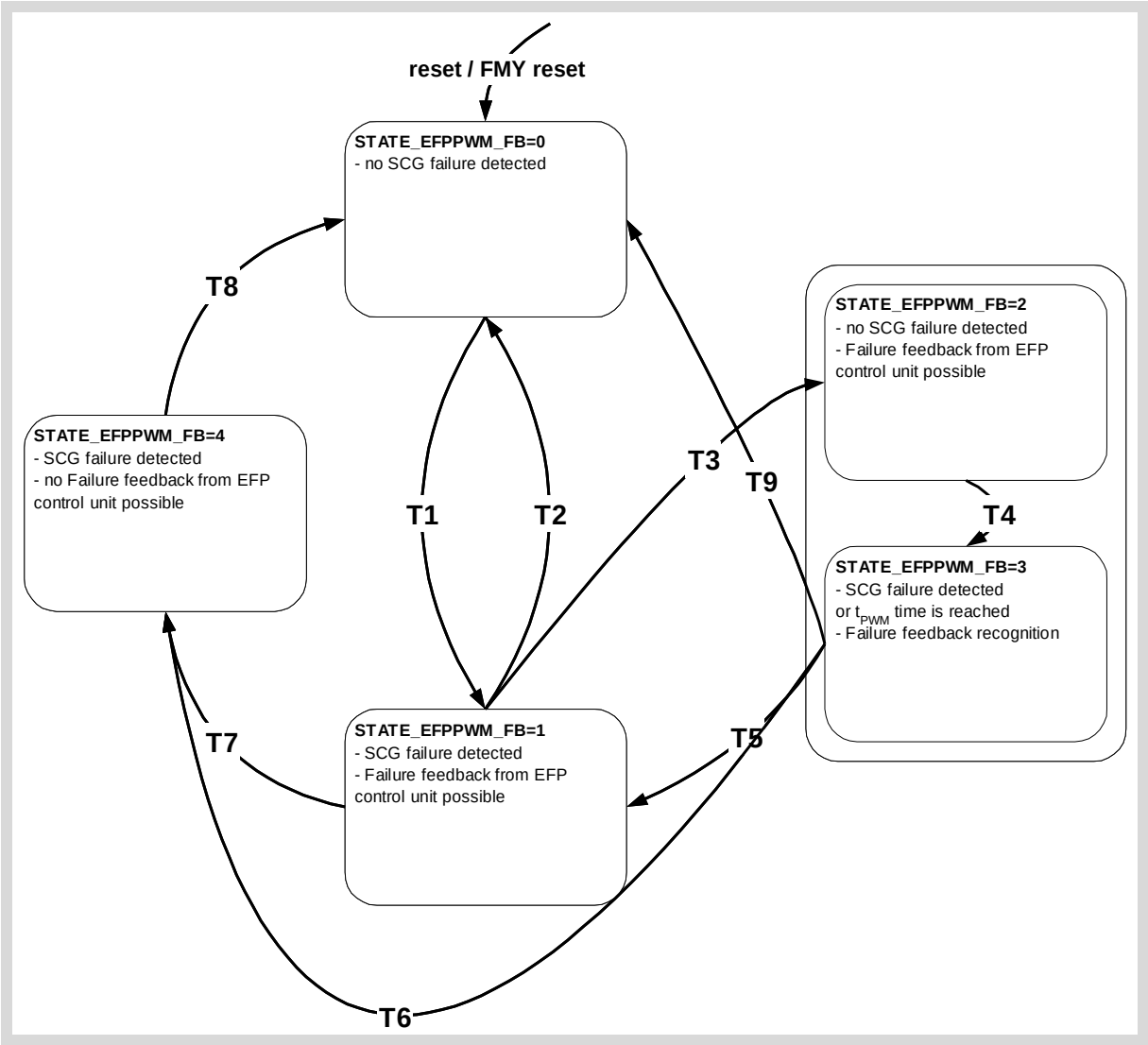

Figure 43.22.5:

▶ Application Conditions

Initialisation:

```
at reset and FMY reset
ERR_EFPPWM_FB = FFH
STATE_EFPPWM_FB = 0H
T_EFPPWM_ECU = 0
T_EFPPWM_FB = 0
LV_EFPPWM_FB_VLD = 0
```

Activation:

```
Pre calculation:
LV_INH_ERR_EFPPWM_FB = not(ACTION_FARM_GetPermission(NC_FID_
ERR_EFPPWM_FB))

Activation:
not(LV_INH_ERR_EFPPWM_FB)and  VB>C_VB_MIN_EFPPWM_VB
```

Deactivation: `at deactivation state machine is initialized one time`

Recurrence: `20 ms`

Copyright © Continental AG. Transmittal, reproduction, dissemination and/or editing of this document as well as utilisation of its contents and communication thereof to others without expressed authorisation are prohibited. Offenders will be held liable for payment of damages. All rights created by patent grant or registration of a utility model or design patent are reserved.

▶ Function Description

```
The active state STATE_EFPPWM_FB is calculated each recurrence, this means that
the transitions on the state machine chart are done in different recurrences.
Exception:  transition T4 (STATE_EFPPWM_FB = 2 to STATE_EFPPWM_FB = 3)  is calculated
in the same recurrence.  Bellow you can find the details related to each transition
inside the state machine.

STATE_EFPPWM_FB = 0
(Only one transition is possible from this active state:
• T1:  STATE_EFPPWM_FB == 0 -> 1):

LV_EFPPWM_FB_VLD = 0
If  bit 1 of ERR_DIAG_ EFPPWM = 1 (SCG detected by HW)
       Then  Transition T1
             STATE_EFPPWM_FB = 1
             ERR_EFPPWM_FB = FFH
             T_EFPPWM_FB = 20ms
       Else     ERR_EFPPWM_FB = 00H
                (no failure feedback recognized)
Endif


STATE_EFPPWM_FB = 1
(Possible transitions from this active state:
• T2:  STATE_EFPPWM_FB == 1 -> 0
• T3:  STATE_EFPPWM_FB == 1 -> 2
• T7:  STATE_EFPPWM_FB == 1 -> 4):

ERR_EFPPWM_FB = FFH
LV_EFPPWM_FB_VLD = 0

If(1) bit 1 of ERR_DIAG_EFPPWM = 0 (no SCG detected by HW)

Then(1) T_EFPPWM_ECU = T_EFPPWM_ECU + 20ms
     Identification of failure feedback
     ERR_EFPPWM_FB = 00H

       While(2) (i < 8 with i = 0 ...  7
      (not all failure possibilities checked yet))

      If(3) T_EFPPWM_FB =(i+1)* C_T_EFPPWM_FB_OFS ± C_T_EFPPWM_FB_WIN
         (t_low  was identified) and bit i of ERR_EFPPWM_FB_CONF = 1
         (failure supported)
      Then(3)     bit i ofERR_EFPPWM_FB = 1
      Endif(3)
      i = i+1 (next failure must be checked)
      Endwhile(2)

  If(4)          ERR_EFPPWM_FB = 00H         (no failure identified)
        Then(4)    Transition T2
                   STATE_EFPPWM_FB = 0
                   T_EFPPWM_ECU = 0
                   T_EFPPWM_FB = 0
        Else(4) Transition T3
                STATE_EFPPWM_FB = 2
                T_EFPPWM_ECU = 20ms
  Endif(4)

Else(1) (SCG detected by HW)
```

Copyright ©Continental AG. Transmittal, reproduction, dissemination and/or editing of this document as well as utilisation of its contents and communication thereof to others without expressed authorisation are prohibited. Offenders will be held liable for payment of damages. All rights created by patent grant or registration of a utility model or design patent are reserved.

```
      T_EFPPWM_FB = T_EFPPWM_FB + 20ms

    If(5) T_EFPPWM_FB > C_T_EFPPWM_FB_WIN +(C_T_EFPPWM_FB_OFS *
    *maximum failure number of supported failures)(calculated out of
       ERR_EFPPWM_FB_CONF)(T_EFPPWM_FB out of range for FB
    Then(5) Transition T7
              STATE_EFPPWM_FB = 4
              T_EFPPWM_FB = 0
              T_EFPPWM_ECU = 0
              ERR_EFPPWM_FB = 00H
    Endif(5)
  Endif(1)

  STATE_EFPPWM_FB = 2
  (Only one transition is possible from this active state:
• T4:  STATE_EFPPWM_FB == 2 -> 3):

  If(6)  bit 1 of ERR_DIAG_EFPPWM = 1 (SCG detected by HW)
         Then(6)    Transition T4
         STATE_EFPPWM_FB = 3
         Else(6)  T_EFPPWM_ECU = T_EFPPWM_ECU + 20ms

              If(7)  T_EFPPWM_ECU >= C_T_EFPPWM_ECU + C_T_EFPPWM_FB_WIN
                     (end of T_EFPPWM_ECU for FB is reached)
              Then(7)  Transition T4
                     STATE_EFPPWM_FB = 3
              Endif(7)
  Endif(6)


  STATE_EFPPWM_FB = 3
  (Possible transitions from this active state:
• T5:  STATE_EFPPWM_FB == 3 -> 1
• T6:  STATE_EFPPWM_FB == 3 -> 4
• T9:  STATE_EFPPWM_FB == 3 -> 0):

  If(8)          bit 1 of ERR_DIAG_EFPPWM = 1
  Then(8) If(9) T_EFPPWM_ECU >= C_T_EFPPWM_ECU - C_T_EFPPWM_FB_WIN
          Then(9)Identification of failure feedback valid
               LV_EFPPWM_FB_VLD = 1
               Transition T5
               STATE_EFPPWM_FB = 1
               T_EFPPWM_FB = 20ms
               T_EFPPWM_ECU = 0
          Else(9)  If(10)  LC_EFPPWM_FB_TRAN_6 = 0
                   Then(10) Transition T6
                        STATE_EFPPWM_FB = 4
                        T_EFPPWM_FB = 0
                        T_EFPPWM_ECU = 0
                        ERR_EFPPWM_FB = 00H
                   Else(10) Transition T5
                        STATE_EFPPWM_FB = 1
                        T_EFPPWM_FB = 20ms
                        T_EFPPWM_ECU = 0
                   Endif(11)
          Endif(9)
  Else(8) Transition T9
           LV_EFPPWM_FB_VLD = 1
           STATE_EFPPWM_FB = 0
           T_EFPPWM_FB = 0
           T_EFPPWM_ECU = 0
  Endif(8)


  STATE_EFPPWM_FB = 4
  (Only one transition is possible from this active state:
• T8:  STATE_EFPPWM_FB == 4 -> 0):

  If(11)          bit 1 of ERR_DIAG_EFPPWM = 0 (no SCG detected by HW)
  Then(11)        Transition T8
               STATE_EFPPWM_FB = 0
  Endif(11)
```

Copyright©Continental AG. Transmittal, reproduction, dissemination and/or editing of this document as well as utilisation of its contents and communication thereof to others without expressed authorisation are prohibited. Offenders will be held liable for payment of damages. All rights created by patent grant or registration of a utility model or design patent are reserved.

43.22.4 EFPPWM diagnosis

▶ General Information

The purpose is to diagnose the signal from the electronic driver, which controls the electrical fuel pump(EFP). The input signal is a modulated control pulse (PWM).

The electronic driver(ATIC39) can distinguish between three symptoms: 'Short circuit to Vbatt', 'Short circuit to GND' and 'Open Load'. The diagnostic of all these symptoms is possible at the same time in the duty cycle range [C_EFPPWM_DIAG_MIN ... C_EFPPWM_DIAG_MAX].

The error detection algorithm in this function for "short circuit to GND" is respecting the status of the failure feedback recognition (ERR_EFPPWM_FB). The failure, detected by the hardware, is delivered by the basic software(BSW) via ERR_DIAG_EFPPWM - the results are available when the function **ACTION_INFR_GetEIDiagEfp(**CDN_DIAG_EFPPWM_BAS, ERR_DIAG_EFPPWM**)** is called.

<u>Error-symptoms:</u> are defined to this diagnosis function as following (3 failures are supported)

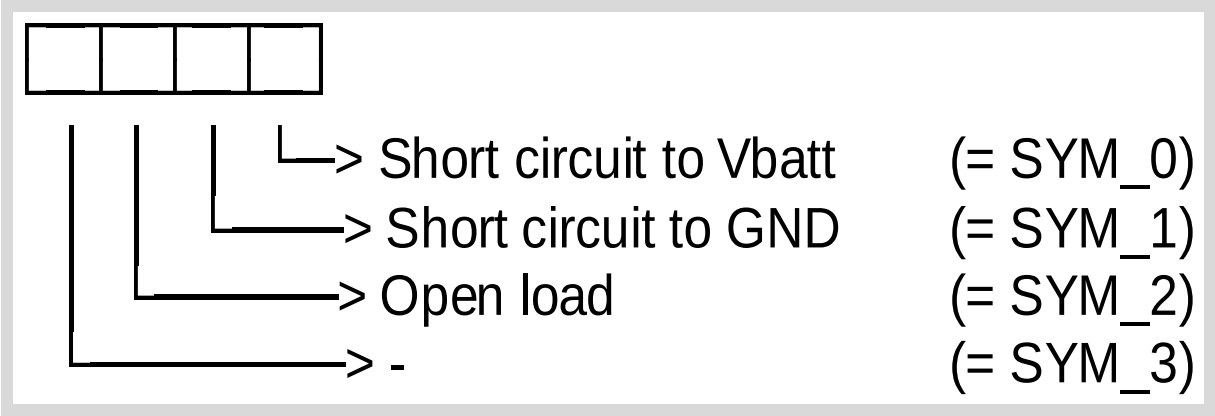

Figure 43.22.6:

▶ Application Conditions

Initialisation:	at LV_IGK 0->1 or reset or reset of failure memory: CDN_DIAG_EFPPWM = 0 The other data are initialized according filter-type: MPL_STD_INI
Activation:	activation in all engine states(always)
Deactivation:	never
Recurrence:	100ms

▶ Function Description

```
The inhibition for EFPPWM diagnostic could be configured by calibration (FARM
editor), depending on the result of the function call ACTION_FARM_GetPermission
and on the battery voltage value, the calculation of EFPPWM diagnostic is done
or skipped.
LV_INH_ERR_EFPPWM = not(ACTION_FARM_GetPermission(NC_FID_ERR_EFPPWM))
If        VB > C_VB_MIN_EFPPWM_FB
     and  not(LV_INH_ERR_EFPPWM)
Then If Activation conditions are met for the NC_PSD_DLY_EFPPWM number of recurrences
the diagnostic can be executed, otherwise the values returned by the electronics
might be not valid and diagnostic should wait until valid value are available.
```

Copyright ©Continental AG. Transmittal, reproduction, dissemination and/or editing of this document as well as utilisation of its contents and communication thereof to others without expressed authorisation are prohibited. Offenders will be held liable for payment of damages. All rights created by patent grant or registration of a utility model or design patent are reserved.

```
      and     C_EFPPWM_DIAG_MIN <= EFPPWM <= C_EFPPWM_DIAG_MAX
      and     ERR_EFPPWM_FB = 00H (no failure feedback possible)
      Then    CDN_DIAG_EFPPWM = CDN_DIAG_EFPPWM_BAS
              ERR_DIAG_EFPPWM is used for debounce mechanism
      Else    CDN_DIAG_EFPPWM  = 0 (diagnosis not possible)
      Endif
Else     CDN_DIAG_EFPPWM = 0
Endif

Failure filtering and error management treatment:

For failure and error management treatment the anti-bounce mechanism is called
with the parameters CDN_DIAG_EFPPWM and ERR_DIAG_EFPPWM.
ACTION_ERRM_FilterMulticondition   (IN<EFPPWM>,IN<CDN_DIAG_EFPPWM>,IN<ERR_DIAG_
EFPPWM>,IN<C_ABC_INC_EFPPWM>,IN<C_ABC_MAX_EFPPWM>,OUT< LV_ERR_EFPPWM>, SYNCRONIZATION<

This algorithm determines:
ERR_SYM_EFPPWM (detected error symptom for EFPPWM diagnosis)
LV_ERR_EFPPWM  (Error flag for debounced error of EFPPWM)
LV_CDN_DIAG_EFPPWM (Diagnosis condition information)
LV_END_DIAG_EFPPWM (End of diagnosis information)
```

43.22.5 EFP control unit: Failure feedback diagnosis

▶ General Information

If a failure is detected by the EFP control unit, a failure feedback is send to the ECU like it has been described in chapter 1.3 - Failure feedback recognition

Description:

Depending on the failure feedback from the EFP control unit (defined by ERR_EFPPWM_FB and LV_EFPPWM_FB_VLD), the diagnosis can manage the following failures:

- LV_ERR_EFPPWM_FB_A
- LV_ERR_EFPPWM_FB_B

The last one is only supported if maximum failure number of supported failures > 4.

Error-symptoms of failure LV_ERR_EFPPWM_FB_A:

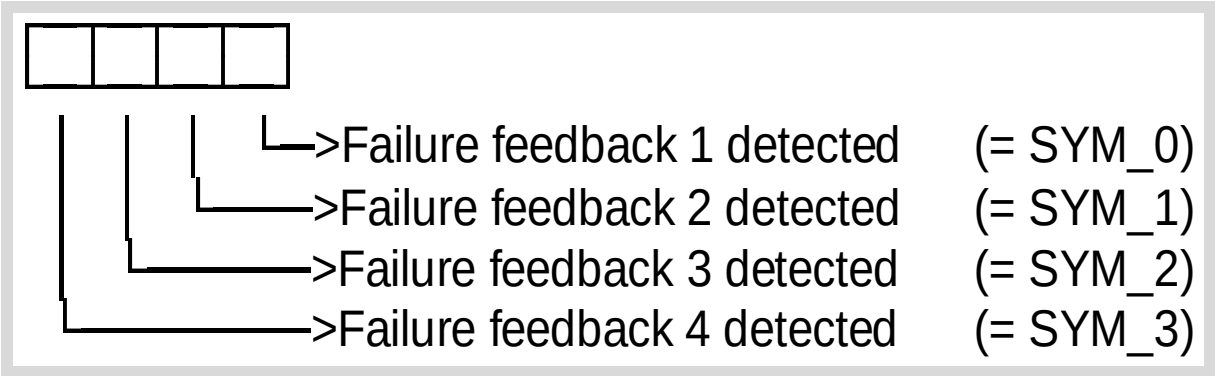

Figure 43.22.7:

Error-symptoms of failure LV_ERR_EFPPWM_FB_B:

Copyright ©Continental AG. Transmittal, reproduction, dissemination and/or editing of this document as well as utilisation of its contents and communication thereof to others without expressed authorisation are prohibited. Offenders will be held liable for payment of damages. All rights created by patent grant or registration of a utility model or design patent are reserved.

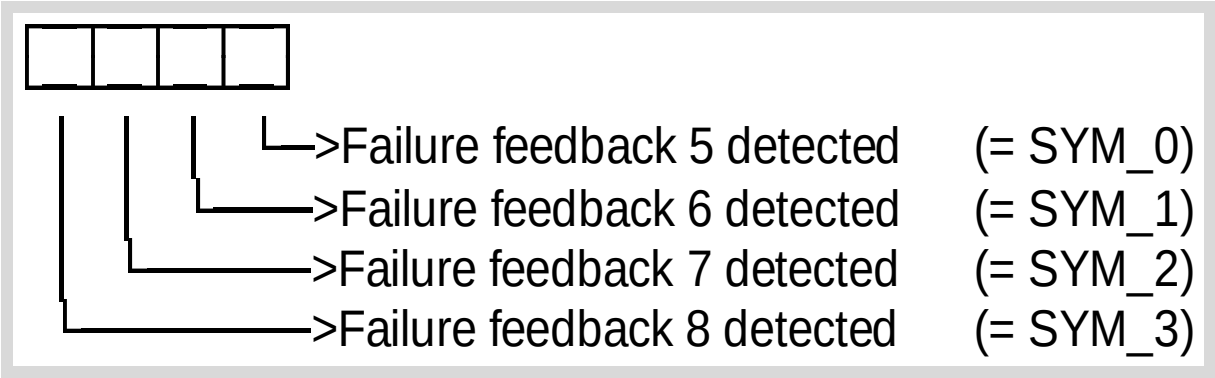

Figure 43.22.8:

Depending on the failure number (ERR_EFPPWM_FB) detected with the failure feedback recognition algorithm, the debounce mechanism (ABC_EFPPWM_FB_A/B) of the corresponding failure is started if the failure number information is valid LV_ERR_EFPPWM_FB_VLD = 1.
If n times sequentially (with n = C_ABC_EFPPWM_FB) a failure feedback for the same failure is detected, then the failure LV_ERR_EFPPWM_FB_A/B is set.

▶ Application Conditions

Initialisation:

```
- RST:
  // Reset EFPPWM_FB_A failure
  C_FMY_INIT(NC_IDX_DIAG_EFPPWM_FB_A)

  // Reset EFPPWM_FB_B failure
  C_FMY_INIT(NC_IDX_DIAG_EFPPWM_FB_B)

  ABC_EFPPWM_FB_A = 0
  ABC_EFPPWM_FB_B = 0
  T_ACT_EFPPWM_FB = 0s

- CLRFMY:
  ABC_EFPPWM_FB_A = 0
  ABC_EFPPWM_FB_B = 0
  T_ACT_EFPPWM_FB = 0s

- IGKON:
  If LC_VAR_EFPPWM_FB = 1
  Then
    // Reset EFPPWM_FB_A failure
    C_FMY_INIT(NC_IDX_DIAG_EFPPWM_FB_A)

    // Reset EFPPWM_FB_B failure
    C_FMY_INIT(NC_IDX_DIAG_EFPPWM_FB_B)

    ABC_EFPPWM_FB_A = 0
    ABC_EFPPWM_FB_B = 0
    T_ACT_EFPPWM_FB = 0s
  Endif
```

Activation: `not(LV_INH_ERR_EFPPWM_FB) and VB > C_VB_MIN_EFPPWM_FB`

Deactivation: `at deactivation LV_CDN_DIAG_EFPPWM_FB_A/B = 0`

Recurrence: `20ms`

Copyright ©Continental AG. Transmittal, reproduction, dissemination and/or editing of this document as well as utilisation of its contents and communication thereof to others without expressed authorisation are prohibited. Offenders will be held liable for payment of damages. All rights created by patent grant or registration of a utility model or design patent are reserved.

▶ Function Description

```
When the calculation of the module is active, the condition to run the diagnostic
is set for FB_A, if the predefined number of failures is exceeded(>4) then the
condition to run the second diagnostic is also set for FB_B, more than 4 failures
can be received as failure feedback from the EFP control unit.
LV_CDN_DIAG_EFPPWM_FB_A = 1

If the failure of the EFP is not yet confirmed(LV_ERR_EFPPWM_FB_A = 0) then a
detection mechanism is used in order to decide which failure is detected since
the EFP control unit is able to return more then 4 failures.  Once the failure
is confirmed the detection mechanism is skipped (see Else branch) and we check
only if the failure is the same or we have another failure active.

 IfLV_ERR_EFPPWM_FB_A = 0
 Then

Since the diagnostic is based on the failure feedback, it is very important to
check if the validity of the signal is ok or not.  Once we have detected a valid
feedback, we check the error symptom value to be corresponding to failures no.1
to no.4.  and we start the debouncing if the condition is full-filled.

  |If  LV_EFPPWM_FB_VLD = 1 (valid failure feedback information available)
  |Then
  |   |If ERR_EFPPWM_FB <= 08H(failure feedback 1-4 detected)
  |   |Then
  |   |   ERR_SYM_EFPPWM_FB_A = bit 0-3 of ERR_EFPPWM_FB
  |   |   ABC_EFPPWM_FB_A = ABC_EFPPWM_FB_A + 1
  |   |   |If ABC_EFPPWM_FB_A = C_ABC_EFPPWM_FB
  |   |   |Then
  |   |   |   LV_ERR_EFPPWM_FB_A = 1
  |   |   |   |If LV_END_DIAG_EFPPWM_FB_A = 0
  |   |   |   |Then
  |   |   |   |   LV_END_DIAG_EFPPWM_FB_A = 1
  |   |   |   |Endif
  |   |   |Endif
  |   |Else (failure feedback 5-8 detected)
  |   |   ERR_SYM_EFPPWM_FB_A = 0
  |   |   ABC_EFPPWM_FB_A = 0
  |   |   |If LV_END_DIAG_EFPPWM_FB_A = 0
  |   |   |Then
  |   |   |    LV_END_DIAG_EFPPWM_FB_A = 1
  |   |   | Endif
  |   |Endif
  |Else
When the feedback is not valid and no failure feedback is detected, then we are
not able to detect any failure, but we set the end of diagnostic flag FB_A because
the diagnostic has been run at least once and no failure was detected for a certain
time.
  |   |If ERR_EFPPWM_FB = 0 (no failure feedback detected)
  |   |Then
  |   |   ERR_SYM_EFPPWM_FB_A = 0
  |   |   ABC_EFPPWM_FB_A = 0
  |   |   |If T_ACT_EFPPWM_FB >= C_T_ACT_EFPPWM_FB
  |   |   |Then
  |   |   | |If LV_END_DIAG_EFPPWM_FB_A = 0
  |   |   | | Then
  |   |   | |    LV_END_DIAG_EFPPWM_FB_A = 1
  |   |   | | Endif
  |   |   |Endif
```

Copyright©Continental AG. Transmittal, reproduction, dissemination and/or editing of this document as well as utilisation of its contents and communication thereof to others without expressed authorisation are prohibited. Offenders will be held liable for payment of damages. All rights created by patent grant or registration of a utility model or design patent are reserved.

```
  |   |Else
  |   |  Get ERR_SYM_EFPPWM_FB_B from ERRM
  |   |Endif
  |Endif
 Else
In the case of a detected and confirmed failure (LV_ERR_EFPPWM_FB_A = 1) we need
to check if the same failure is still present or a different failure has been
detected meanwhile.  If a different failure has been detected meanwhile and the
failure feedback is valid, then the ERRM is updated with the new values.
  |If (    LV_EFPPWM_FB_VLD = 1 (valid failure feedback information available)
  |    and ERR_EFPPWM_FB <= 08H (failure feedback 1-4 detected)
  |    and bit 0-3 of ERR_EFPPWM_FB != ERR_SYM_EFPPWM_FB_A
  |        (another failure is detected)
  | )
  |Then
  |   ERR_SYM_EFPPWM_FB_A = bit 0-3 of ERR_EFPPWM_FB
  |   LV_ERR_EFPPWM_FB_A = 0
  |   LV_ERR_EFPPWM_FB_A = 1
  |   Symptom in ERRM is actualized with LV_ERR_EFPPWM_FB_A 0->1
  |Endif
 Endif



 If maximum failure number of supported failures > 4(calculated out of ERR_EFPPWM_
FB_CONF)

 Then
The predefined number of failures is exceeded(>4)and the condition to run the
second diagnostic is also set for FB_B.

  LV_CDN_DIAG_EFPPWM_FB_B = 1

If the failure of the EFP is not yet confirmed(LV_ERR_EFPPWM_FB_B = 0) then a
detection mechanism is used in order to decide which failure is detected since
the EFP control unit is able to return more then 4 failures.  Once the failure
is confirmed the detection mechanism is skipped (see Else branch) and we check
only if the failure is the same or we have another failure active.

  | If LV_ERR_EFPPWM_FB_B = 0
  | Then
Once we have detected a valid feedback, we check the error symptom value to be
corresponding to failures no.5 to no.8.  and we start the debouncing if the condition
is full-filled.
  | |If LV_EFPPWM_FB_VLD = 1 (valid failure feedback information available)
  | | Then
  | |   If ERR_EFPPWM_FB >= 10H(failure feedback 5-8 detected)
  | |   Then
  | |     ERR_SYM_EFPPWM_FB_B = bit 4-8 of ERR_EFPPWM_FB
  | |     ABC_EFPPWM_FB_B = ABC_EFPPWM_FB_B + 1
  | |     |If ABC_EFPPWM_FB_B = C_ABC_EFPPWM_FB
  | |     |Then
  | |     |  LV_ERR_EFPPWM_FB_B = 1
  | |     |  |If LV_END_DIAG_EFPPWM_FB_B = 0
  | |     |  |Then
  | |     |  |  LV_END_DIAG_EFPPWM_FB_B = 1
  | |     |  |Endif
  | |     |Endif
  | |   Else (failure feedback 1-4 detected)
  | |     ERR_SYM_EFPPWM_FB_B = 0
```

Copyright ©Continental AG. Transmittal, reproduction, dissemination and/or editing of this document as well as utilisation of its contents and communication thereof to others without expressed authorisation are prohibited. Offenders will be held liable for payment of damages. All rights created by patent grant or registration of a utility model or design patent are reserved.

```
| |      ABC_EFPPWM_FB_B = 0
| |      |If LV_END_DIAG_EFPPWM_FB_B = 0
| |      |Then
| |      |  LV_END_DIAG_EFPPWM_FB_B = 1
| |      |Endif
| |    Endif
| | Else
```

When the feedback is not valid and no failure feedback is detected, then we are not able to detect any failure, but we set the end of diagnostic flag for FB_B because the diagnostic has been run at least once and no failure was detected for a certain time.

```
| |    |If ERR_EFPPWM_FB = 0 (no failure feedback detected)
| |    |Then
| |    |  ERR_SYM_EFPPWM_FB_B = 0
| |    |  ABC_EFPPWM_FB_B = 0
| |    |  |If T_ACT_EFPPWM_FB >= C_T_ACT_EFPPWM_FB
| |     |  |Then
| |    |  | |If LV_END_DIAG_EFPPWM_FB_B = 0
| |    |  | | Then
| |    |  | |   LV_END_DIAG_EFPPWM_FB_B = 1
| |    |  | | Endif
| |     |  |Endif
| |    |Else
| |    | Get ERR_SYM_EFPPWM_FB_B from ERRM
| |    |Endif
|| Endif
| Else
```

In the case of a detected and confirmed failure(LV_ERR_EFPPWM_FB_B = 1) we need to check if the same failure is still present or a different failure has been detected meanwhile. If a different failure has been detected meanwhile and the failure feedback is valid, then the ERRM is updated with the new values.

```
||If (   LV_EFPPWM_FB_VLD = 1(valid failure feedback information available)
| |   and ERR_EFPPWM_FB >= 10H(failure feedback 5-8 detected)
| |   and bit 4-7 of ERR_EFPPWM_FB != ERR_SYM_EFPPWM_FB_B
| |       (another failure is detected)
| |   )
|  |Then
| |  ERR_SYM_EFPPWM_FB_B = bit 4-7 of ERR_EFPPWM_FB
| |  LV_ERR_EFPPWM_FB_B = 0
| |  LV_ERR_EFPPWM_FB_B = 1
| |  Symptom in ERRM is actualized with LV_ERR_EFPPWM_FB_B 0->1
| |Endif
| Endif

Else
```

In the case of a detected and confirmed failure (LV_ERR_EFPPWM_FB_B = 1) we need to check if the same failure is still present or a different failure has been detected meanwhile. If a different failure has been detected meanwhile and the failure feedback is valid, then the ERRM is updated with the new values.

```
 LV_CDN_DIAG_EFPPWM_FB_B = 0
 ERR_SYM_EFPPWM_FB_B = 0
|If LV_END_DIAG_EFPPWM_FB_B = 0
| Then
|   LV_END_DIAG_EFPPWM_FB_B = 1
| Endif
Endif
```

Calculation of the necessary time to have failure feedback from EFP control unit is done bellow, timer is increment in the case of EFPPWM exceeding a threshold:

```
If EFPPWM > C_EFPPWM_MIN_FB
Then
  T_ACT_EFPPWM_FB = T_ACT_EFPPWM_FB + 20ms
  T_ACT_EFPPWM_FB is limited to 1310,7 s
Endif
```

Copyright ©Continental AG. Transmittal, reproduction, dissemination and/or editing of this document as well as utilisation of its contents and communication thereof to others without expressed authorisation are prohibited. Offenders will be held liable for payment of damages. All rights created by patent grant or registration of a utility model or design patent are reserved.

43.23 Fuel pressure sensor diagnosis for low pressure

Data Definition

Name	Mode	Coded Limits	Display Limits	Resolution	Unit
ERR_SYM_FUP_EFP	V	0H 1H 2H 4H 8H	NO_SYM SYM_0 SYM_1 SYM_2 SYM_3	-	-
Detected symptom FUP sensor					
LV_CDN_DIAG_FUP_EFP	V	0... 1H	0 ...1	1	-
Status od diagnosis for FUP sensor					
LV_END_DIAG_FUP_EFP	V	0... 1H	0 ...1	1	-
End of diagnosis for FUP sensor diagnosis					
LV_ERR_FUP_EFP	O/V	0... 1H	0 ...1	1	-
FUP sensor error detected					

Input Data

LV_IGK {p. 24082}	LV_INH_ERR_FUP_EFP {p. 12159}	V_FUP_EFP_MV {p. 11815}	

Calibration Data

Name	Mode	Coded Limits	Display Limits	Resolution	Unit
C_V_FUP_EFP_MV_MAX_DIAG	V	0... 3FFH	0... 4.9951171875	0.00488281	V
Threshold value V_FUP_EFP_MV to detect Short circuit in signal wire to VB					
C_V_FUP_EFP_MV_MIN_DIAG	V	0... 3FFH	0... 4.9951171875	0.00488281	V
Threshold value V_FUP_EFP_MV to detect Short circuit in signal wire to ground or wire break					

General Information

This module describes the electrical diagnosis of the fuel pressure sensor present in the low pressure system and used for pressure regulation in the low pressure rail. It is very important to detect the presence of any malfunction on this sensor because the pressure regulation depends exclusively on the feedback that we get from the sensor, if the feedback is not valid then the pressure control will be not realistic and this might endanger the correct behaviour of the engine itself.

Copyright ©Continental AG. Transmittal, reproduction, dissemination and/or editing of this document as well as utilisation of its contents and communication thereof to others without expressed authorisation are prohibited. Offenders will be held liable for payment of damages. All rights created by patent grant or registration of a utility model or design patent are reserved.

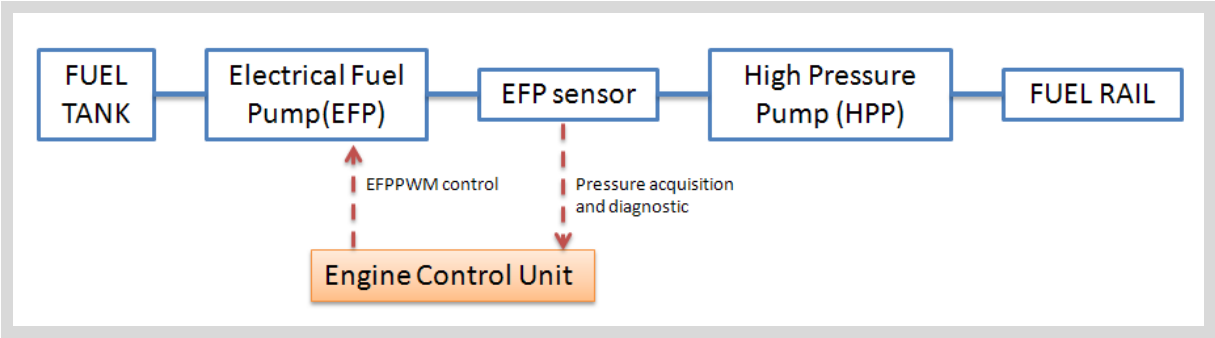

Figure 43.23.1:

The diagnostic function is able to detect 2 electrical failures(error symptoms), as follows:

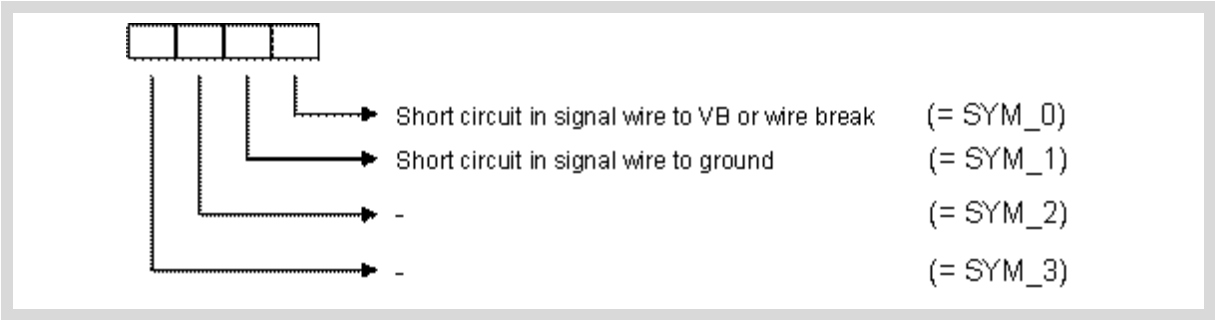

Figure 43.23.2:

Remark: The calculation of LV_END_DIAG_FUP_EFP(the logical variable that says that the diagnostic run at least once) is done in anti bounce algorithm (more details about debouncing and Error Management(ERRM) mechanisms could be found in ERRM description chapter).

▶ Application Conditions

Initialisation: –

Activation:

```
if     LV_IGK = 1 AND LV_INH_ERR_FUP_EFP = 0
Then    LV_CDN_DIAG_FUP_EFP = 1
       (diagnosis is active)
else   LV_CDN_DIAG_FUP_EFP = 0
       (diagnosis is inactive)
endif
```

Deactivation: –

Recurrence: 40 ms

The calculation rate of the function is 40ms and it is done if the activation conditions are true (ignition key is on and there is no inhibition active).
conditions are true (ignition key is on and there is no inhibition active).

▶ Function Description

Copyright ©Continental AG. Transmittal, reproduction, dissemination and/or editing of this document as well as utilisation of its contents and communication thereof to others without expressed authorisation are prohibited. Offenders will be held liable for payment of damages. All rights created by patent grant or registration of a utility model or design patent are reserved.

The electrical diagnostic mechanism is based on the voltage that the sensor provides to the applicative software(ASW), the acquisition of the voltage is done by the basic software(BSW) . There are 2 voltage thresholds defined bellow: one is for Short circuit to battery voltage or to plus (SCP) and the other one is for Short circuit to ground (SCG).

Short circuit to plus (ERR_SYM_ FUP_EFP = SYM_0):

If the voltage is exceeding the upper threshold(C_V_FUP_EFP_MV_MAX_DIAG) then we might have a **SCP**, so the symptom is set (ERR_SYM_ FUP_EFP = 1) and the debouncing mechanism defined in ERRM is start. If the symptom is present for a calibratable time, then the failure is confirmed and the error flag is set(LV_ERR_FUP_EFP= 1).

If V_FUP_EFP_MV > C_V_FUP_EFP_MV_MAX_DIAG
Then Symptom "Short circuit in signal wire to VB or wire break" is
active, anti-bounce counter increment
ERR_SYM_ FUP_EFP = 1H
LV_ERR_FUP_EFP= 1 (after debounce)

Else Symptom "Short circuit in signal wire to VB or wire break" is
inactive, anti-bounce counter decrement
ERR_SYM_FUP_EFP = 0H
LV_ERR_FUP_EFP = 0 (after debounce)

Endif

Short circuitto ground (ERR_SYM_ FUP_EFP = SYM_1):

If the voltage is bellow the lower threshold(C_V_FUP_EFP_MV_MIN_DIAG) then we might have a **SCG**, so the symptom is set (ERR_SYM_ FUP_EFP = 2) and the debouncing mechanism defined in ERRM is start. If the symptom is present for a calibratable time, then the failure is confirmed and the error flag is set(LV_ERR_FUP_EFP= 1).

If V_FUP_EFP_MV < C_V_FUP_EFP_MV_MIN_DIAG
then Symptom "Short circuit in signal wire to ground" is active, anti-
bounce counter increment
ERR_SYM_ FUP = 2H
LV_ERR_FUP_EFP= 1 (after debounce)

else Symptom "Short circuit in signal wire to ground" is inactive,
antibounce counter decrement
ERR_SYM_FUP_EFP = 0H
LV_ERR_FUP_EFP = 0 (after debounce)

Endif

Copyright ©Continental AG. Transmittal, reproduction, dissemination and/or editing of this document as well as utilisation of its contents and communication thereof to others without expressed authorisation are prohibited. Offenders will be held liable for payment of damages. All rights created by patent grant or registration of a utility model or design patent are reserved.

43.24 Fuel pressure sensor diagnosis for low pressure (Appl. Inc.)

Data Definition

Name	Mode	Coded Limits	Display Limits	Resolution	Unit
LV_INH_ERR_FUP_EFP	O/V	0... 1H	0 ...1	1	-
Inhibition condition for the fuel pressure sensor diagnosis (low pressure circuit)					

Calibration Data

Name	Mode	Coded Limits	Display Limits	Resolution	Unit
C_ABC_INC_FUP_EFP	V	0... FFH	0... 255	1	-
Increment debounce counter					
C_ABC_MAX_FUP_EFP	V	1... FFH	1... 255	1	-
Maximum value debounce counter					

Configuration Data

Name	Mode	Coded Limits	Display Limits	Resolution	Unit
NC_FID_ERR_FUP_EFP	-	0... FFFFH	0... 65535	1	-
Fuel pressure sensor diagnosis (low pressure diagnosis)					
NC_IDX_ERR_FUP_EFP_H	-	1... FFFFH	1... 65535	1	-
fuel pressure sensor diagnosis (low pressure circuit) short circuit or eire break					
NC_IDX_ERR_FUP_EFP_L	-	1... FFFFH	1... 65535	1	-
Fuel pressure sensor diagnosis (low pressure circuit) signal wir to ground					

Import actions:

ACTION_FARM_GetPermission(**IN** <PRM_FID>, **OUT** <PRM_LV_PRMS>)

Error treatment

Failure Identifier	Symptom Description	Nr	OBD Sym DTC	Filter Type	CARB class
Failure Description	**Diagnostic Description**				
FUP_EFP	NC_IDX_ERR_FUP_EFP_H	0		STD_INI	
Fuel pressure diagnosis for low pressure	*fuel pressure sensor diagnosis (low pressure circuit) short circuit or eire break*				
	NC_IDX_ERR_FUP_EFP_L	1			
	Fuel pressure sensor diagnosis (low pressure circuit) signal wir to ground				
		2			
		3			

Copyright ©Continental AG. Transmittal, reproduction, dissemination and/or editing of this document as well as utilisation of its contents and communication thereof to others without expressed authorisation are prohibited. Offenders will be held liable for payment of damages. All rights created by patent grant or registration of a utility model or design patent are reserved.

Definition of the behavior of the initialization				
ERR-Flag		Reset at ECU Reset	reset at Key ON	Latch error on fail
		YES	YES	NO
ABC	ABC-class	MAX-INC after Failure	No Reset at NEWDC	Init on Condition Loss
	ABC	NO	NO	NO
Description of the implementation				
	prestore FRF	RBM	Similar conditions	
	-	-		

General Information

This specification gives the inhibition conditions to the Fuel pressure sensor diagnosis for low pressure.
It is adapted to the needs of UDGI.

Note: All debouncing is defined centrally within ERRM/UDGI, the diagnostics specific calibration is kept to fulfill the necessary interface but has no effect and hidden from the application system.

Application Conditions

Initialisation: *(at reset and LV_IGK = 0- -> 1):* `LV_INH_ERR_FUP_EFP = 0`

Recurrence: `40 ms`

Function Description

```
LV_INH_ERR_FUP_EFP = not(ACTION_FARM_GetPermission(NC_FID_ERR_FUP_EFP))
```

Copyright ©Continental AG. Transmittal, reproduction, dissemination and/or editing of this document as well as utilisation of its contents and communication thereof to others without expressed authorisation are prohibited. Offenders will be held liable for payment of damages. All rights created by patent grant or registration of a utility model or design patent are reserved.

43.25 Fuel pressure damper diagnosis

▶ Data Definition

Name	Mode	Coded Limits	Display Limits	Resolution	Unit
ERR_SYM_FUP_EFP_DAMP	V	0H 1H 2H 4H 8H	NO_SYM SYM_0 SYM_1 SYM_2 SYM_3	-	-
Detected symptom FUP_EFP damper error					
FUP_EFP_DAMP_DET	V	0... FFFFH	0... 173888	2.6533608	hPa
Fuel pressure of low pressure side for damping error detection					
LV_CDN_DIAG_FUP_EFP_DAMP	V	0... 1H	0 ...1	1	-
Status of diagnosis for FUP_EFP damper diagnosis					
LV_END_DIAG_FUP_EFP_DAMP	V	0... 1H	0 ...1	1	-
End of diagnosis for FUP_EFP damper diagnosis					
LV_ERR_FUP_EFP_DAMP	O/V	0... 1H	0 ...1	1	-
Fuel pressure damper diagnosis error detected					

▶ Input Data

FUP_EFP_MES {p. 11905}	LV_IGK {p. 24082}	LV_INH_ERR_FUP_EFP_DAMP {p. 12164}	

▶ Calibration Data

Name	Mode	Coded Limits	Display Limits	Resolution	Unit
C_CRLC_FUP_EFP_DAMP_DET	V	0... FFH	0... 0.99609375	0.00390625	-
Correlation constant for the FUP_EFP_DAMP_DET calculation					
C_FUP_EFP_DAMP_DEV_MAX	V	0... FFFFH	0... 173888	2.6533608	hPa
Maximum deviation of the EFP_DAMP					

▶ General Information

Note : The anti-bounce is performed internally in the software, the calibrations related to anti-bounce for each diagnosis (XXX) can be found in the calibration dataset.
C_ABC_INC_XXX – increment value of anti-bounce counter
C_ABC_DEC_XXX – decrement value of anti-bounce counter
C_ABC_MAX_XXX – maximum limit for anti-bounce counter

XXX represents the respective diagnosis.

The fuel pressure damper is a mechanical device used in the low pressure line (at inlet side of the high pressure pump) to dampen the pressure oscillations in the low pressure line before the entry of the fuel into the high pressure pump. The fuel pressure damper diagnosis is performed in order to identify a defective damper. This is done by detecting the presence of fuel pressure oscillations in the low pressure line which should have been dampened by the damper.

Copyright ©Continental AG. Transmittal, reproduction, dissemination and/or editing of this document as well as utilisation of its contents and communication thereof to others without expressed authorisation are prohibited. Offenders will be held liable for payment of damages. All rights created by patent grant or registration of a utility model or design patent are reserved.

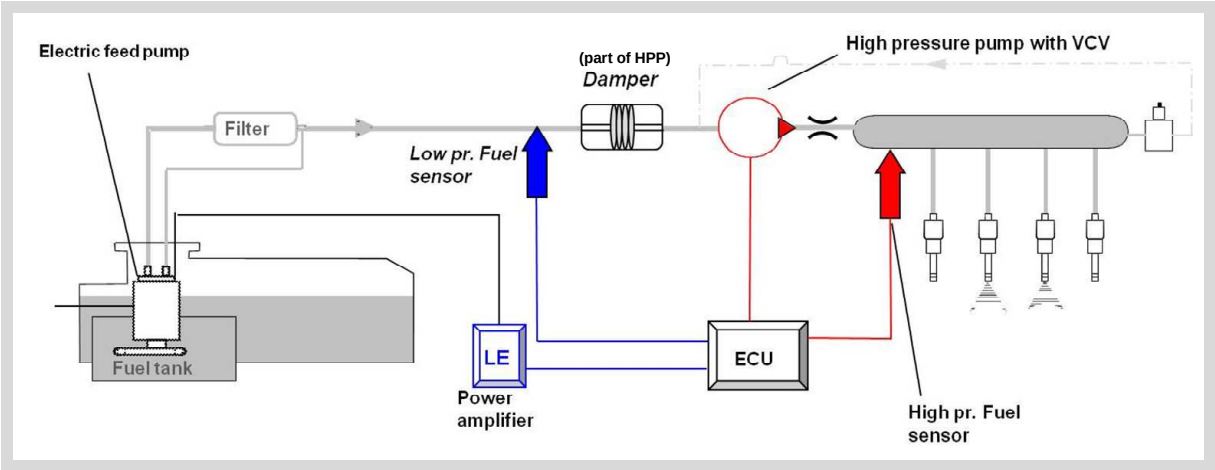

Figure 43.25.1: System overview with low and high pressure components

There is one error-symptom defined for this diagnosis as shown below,

Figure 43.25.2: Error symptom description

▶ Application Conditions

Initialisation: *(at reset and LV_IGK = 1):* FUP_EFP_DAMP_DET = FUP_EFP_MES

Activation:

```
IF(1)      LV_IGK = 1 and  LV_INH_ERR_FUP_EFP_DAMP = 0
THEN(1)    LV_CDN_DIAG_FUP_EFP_DAMP = 1
           (diagnosis is active)
ELSE(1)    LV_CDN_DIAG_FUP_EFP_DAMP = 0
           (diagnosis is inactive)
ENDIF
```

Recurrence: 40 ms

▶ Function Description

The diagnosis is activated only if there is no inhibition. In case the diagnosis is active, the diagnostic condition is always true.
The (low pressure side) fuel pressure analog input signal at the A/D-Input of the ECU is passed through a low pass filter (Fig. 3), in which a calibratable filter factor (C_CRLC_FUP_EFP_DAMP_DET) is used, the output of the filter is treated as the damped value of the fuel pressure.

Copyright ©Continental AG. Transmittal, reproduction, dissemination and/or editing of this document as well as utilisation of its contents and communication thereof to others without expressed authorisation are prohibited. Offenders will be held liable for payment of damages. All rights created by patent grant or registration of a utility model or design patent are reserved.

If the difference between the measured value and the filtered (damped) value of the fuel pressure exceeds a calibratable threshold (C_FUP_EFP_DAMP_DEV_MAX), then the symptom is triggered. The fuel pressure damper error status is updated after anti-bounce filtering.
If the error is set, then it indicates the the damper is defective.

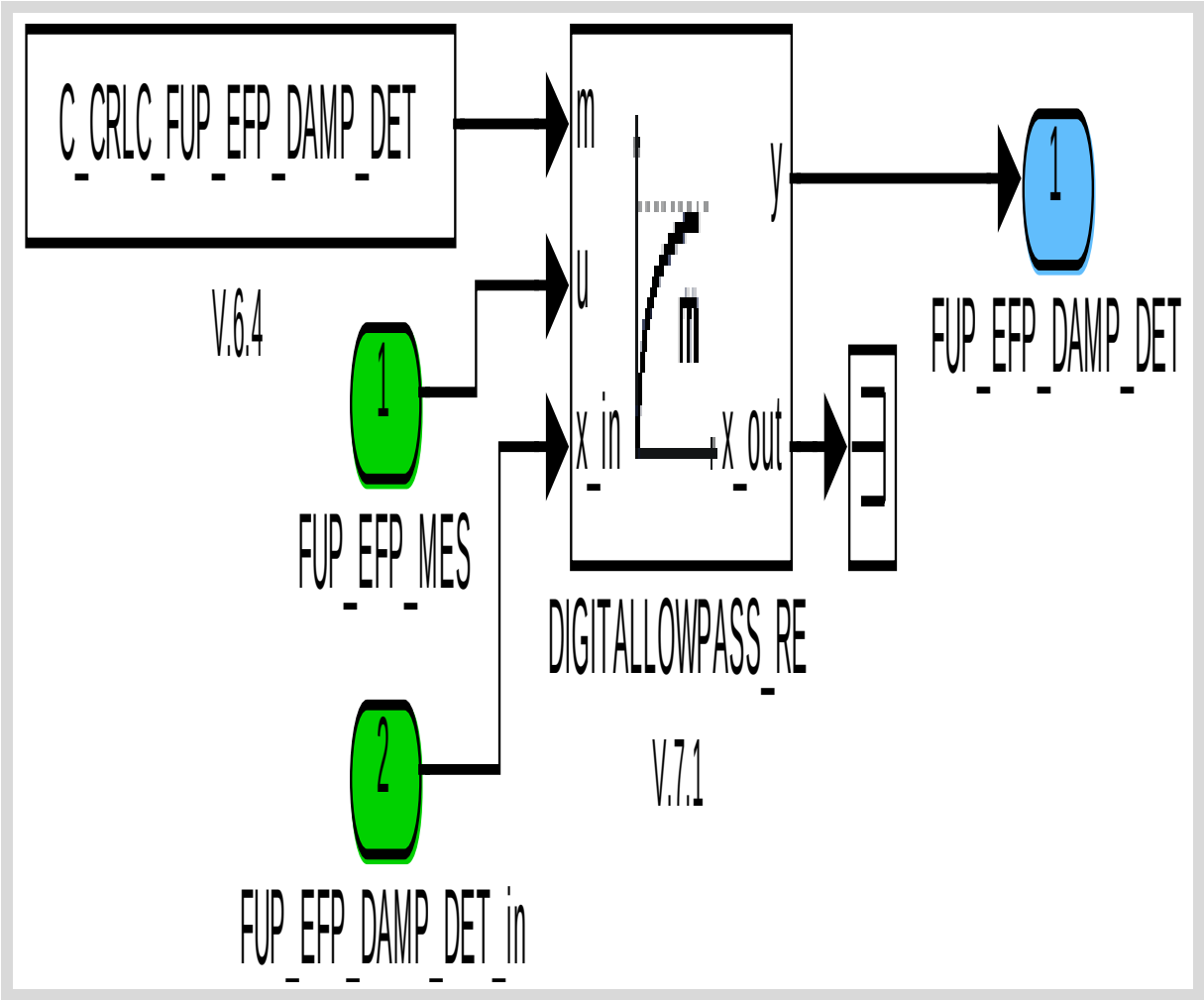

Figure 43.25.3: Filtering of low pressure signal

```
IF(1)       |FUP_EFP_MES - FUP_EFP_DAMP_DET| > C_FUP_EFP_DAMP_DEV_MAX
THEN(1)     Symptom "Fuel pressure damper error detected" is active,
            debounce counter increment
            ERR_SYM_FUP_EFP_DAMP = 1H
            LV_ERR_FUP_EFP_DAMP = 1 (after debounce)
ENDIF(1)
```

Copyright©Continental AG. Transmittal, reproduction, dissemination and/or editing of this document as well as utilisation of its contents and communication thereof to others without expressed authorisation are prohibited. Offenders will be held liable for payment of damages. All rights created by patent grant or registration of a utility model or design patent are reserved.

43.26 Fuel pressure damper diagnosis (Appl. Inc.)

Data Definition

Name	Mode	Coded Limits	Display Limits	Resolution	Unit
LV_INH_ERR_FUP_EFP_DAMP	O/V	0... 1H	0 ...1	1	-
Inhibition bit for the fuel pressure damper diagnosis					

Input Data

LV_FRS {p. 12296}	LV_IGK {p. 24082}	MFF_SP_FUP_CTL {p. 11463}	N_32 {p. 8079}
T_AST {p. 8436}			

Calibration Data

Name	Mode	Coded Limits	Display Limits	Resolution	Unit
C_ABC_INC_FUP_EFP_DAMP	-	0... FFH	0... 255	1	-
Increment debounce counter					
C_ABC_MAX_FUP_EFP_DAMP	-	1... FFH	1... 255	1	-
Maximum value debounce counter					
C_MFF_SP_MAX_FUP_EFP_DAMP	-	0... FFFFH	0... 1389	0.02119478	mg
Maximum injected fuel mass for the fuel pressure damper diagnosis					
C_MFF_SP_MIN_FUP_EFP_DAMP	-	0... FFFFH	0... 1389	0.02119478	mg
Minimum injected fuel mass for the fuel pressure damper diagnosis					
C_N_32_MAX_FUP_EFP_DAMP	-	0... FFH	0... 8160	32	rpm
Maximum engine speed for the fuel pressure damper diagnosis					
C_N_32_MIN_FUP_EFP_DAMP	-	0... FFH	0... 8160	32	rpm
Minimum engine speed for the fuel pressure damper diagnosis					
C_T_AST_INH_DIAG_EFP_DAMP	-	0... FFFFH	0... 6553.5	0.1	s
Time after start to inhibit damper diagnosis					

Configuration Data

Name	Mode	Coded Limits	Display Limits	Resolution	Unit
NC_FID_ERR_FUP_EFP_DAMP	-	0... FFFFH	0... 65535	1	-
Run the FUP_EFP_DAMP diagnostics					
NC_IDX_ERR_FUP_EFP_DAMP	-	1... FFFFH	1... 65535	1	-
Fuel pressure damper diagnosis					

Copyright ©Continental AG. Transmittal, reproduction, dissemination and/or editing of this document as well as utilisation of its contents and communication thereof to others without expressed authorisation are prohibited. Offenders will be held liable for payment of damages. All rights created by patent grant or registration of a utility model or design patent are reserved.

▶ Import actions:

```
ACTION_FARM_GetPermission(IN <PRM_FID>, OUT <PRM_LV_PRMS>)
```

▶ General Information

The fuel pressure damper is a mechanical device used in the low pressure line (after the fuel filter and before the high pressure pump) to dampen the pressure fluctuations before the entry of the fuel into the high pressure pump. The fuel pressure damper diagnosis is performed in order to identify a defective damper. This module contains the inhibition calculation for the fuel pressure damper diagnosis, i.e. the conditions when the diagnosis should not be executed.

Error treatment:

Failure Identifier	Symptom Description	Nr	OBD Sym DTC	Filter Type	CARB class
Failure Description	Diagnostic Description				
FUP_EFP_DAMP	NC_IDX_ERR_FUP_EFP_DAMP	0		STD	CC
Fuel pressure damper diagnosis	*Fuel pressure deviation over threshold*				
		1			
		2			
		3			

Definition of the behavior of the initialization				
ERR-Flag		**Reset at ECU Reset**	**reset at Key ON**	**Latch error on fail**
		NO	NO	NO
ABC	**ABC-class**	**MAX-INC after Failure**	**No Reset at NEWDC**	**Init on Condition Loss**
	ABC16	NO	NO	NO
Description of the implementation				
	prestore FRF	**RBM**		

▶ Application Conditions

Initialisation: `RST, IGKON`

Activation: `always`

Deactivation: `never`

Recurrence: `40MS`

Copyright©Continental AG. Transmittal, reproduction, dissemination and/or editing of this document as well as utilisation of its contents and communication thereof to others without expressed authorisation are prohibited. Offenders will be held liable for payment of damages. All rights created by patent grant or registration of a utility model or design patent are reserved.

Function Description

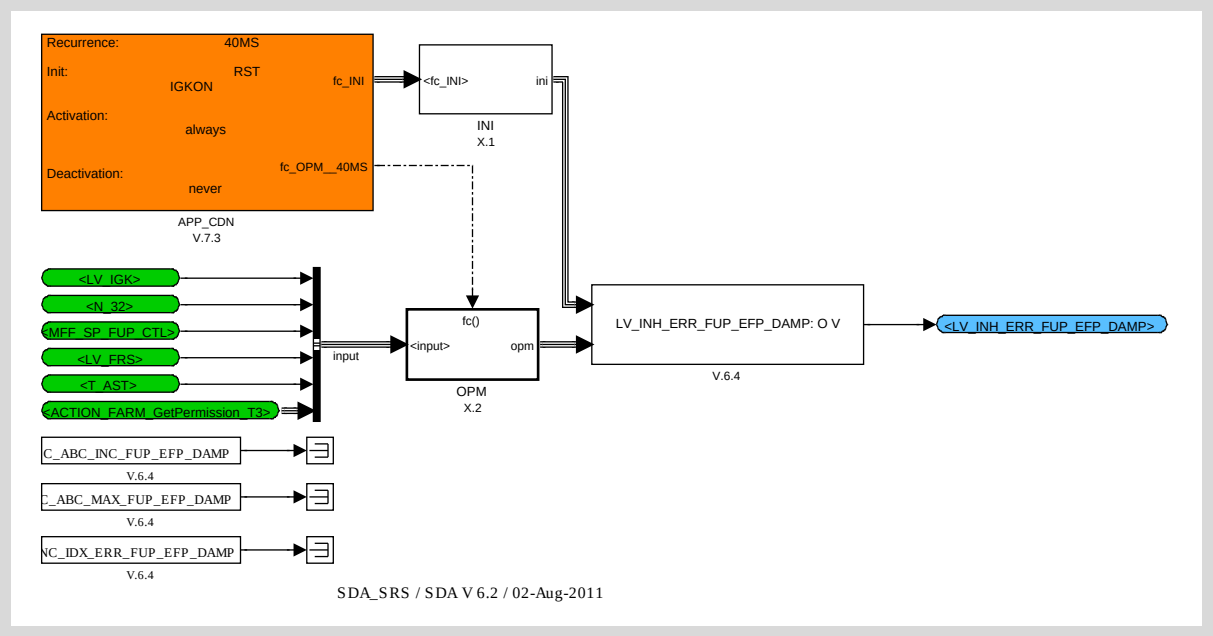

Figure 43.26.1:

43.26.1 Initialisation

43.26.1.1 Initialisation on reset and ignition key-on

The fuel pressure damper diagnosis is inhibited when there an ECU reset or when the ignition key is turned on.

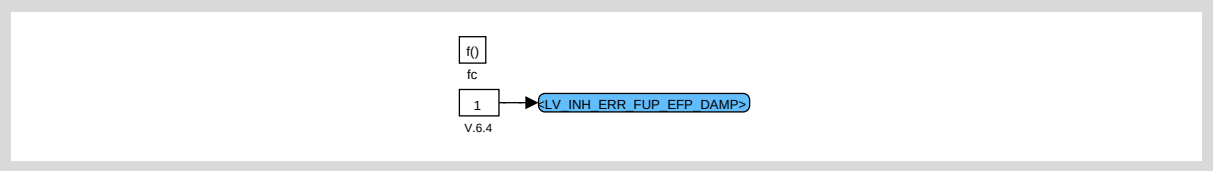

Figure 43.26.2:

43.26.2 Operation tasks

43.26.2.1 Inhibition calculation

The fuel pressure damper diagnosis is inhibited under following conditions,
Through the function identifier (NC_FID_ERR_FUP_EFP_DAMP) contains the calibrated error configuration in the Fault reaction manager (FARM). Existence of any errors which are configured to this function identifier will inhibit the diagnosis by setting the permission flag (LV_PRMS) to zero, or,
When the ignition is not turned on, or,
When the engine speed is in between certain maximum (C_N32_MAX_FUP_EFP_DAMP) and minimum (C_N32_MIN_FUP_EFP_DAMP) calibratable thresholds, or,
When the fuel mass flow set point requested by the fuel control is in between certain maximum (C_MFF_SP_MAX_FUP_EFP_DAMP) and minimum (C_MFF_SP_MIN_FUP_EFP_DAMP) calibratable thresholds, or,

Copyright ©Continental AG. Transmittal, reproduction, dissemination and/or editing of this document as well as utilisation of its contents and communication thereof to others without expressed authorisation are prohibited. Offenders will be held liable for payment of damages. All rights created by patent grant or registration of a utility model or design patent are reserved.

When the fuel tank is in reserve mode, or,
When the after start time is below a certain calibratable threshold (C_T_AST_INH_DIAG_EFP_DAMP).

The diagnosis is inhibited in case of reserve fuel, since pressure fluctuations in the line are inevitable when there is low fuel in the tank.

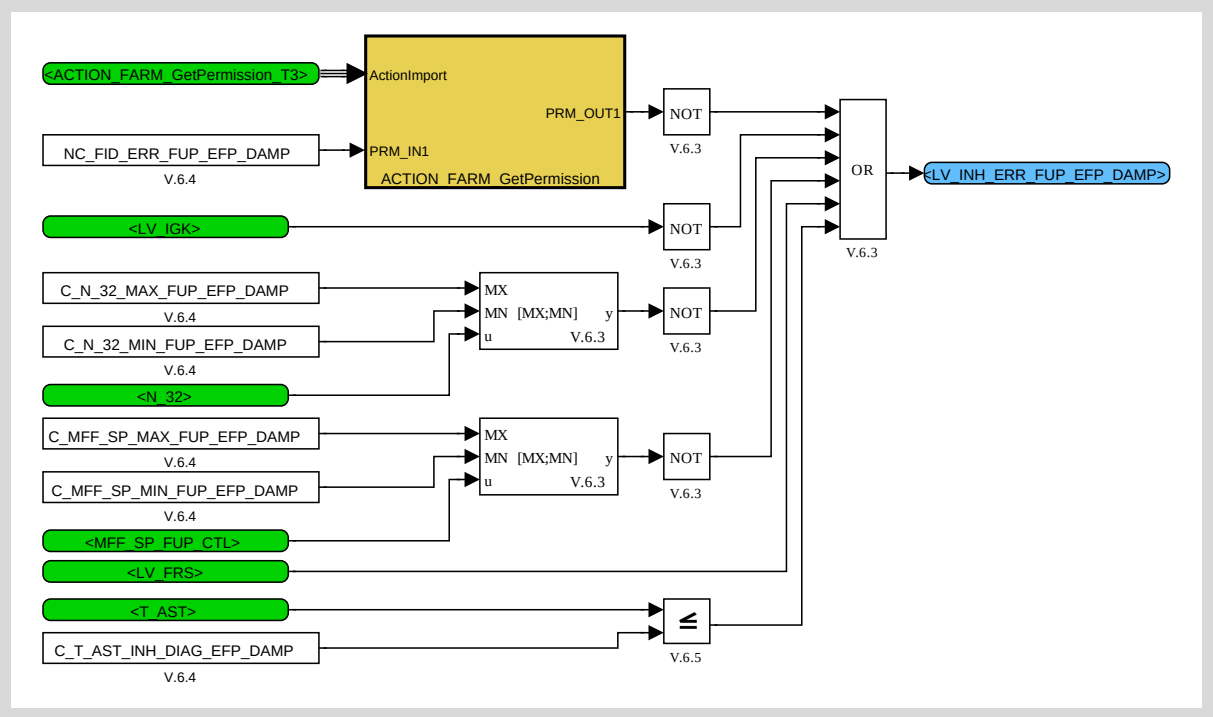

Figure 43.26.3:

Copyright ©Continental AG. Transmittal, reproduction, dissemination and/or editing of this document as well as utilisation of its contents and communication thereof to others without expressed authorisation are prohibited. Offenders will be held liable for payment of damages. All rights created by patent grant or registration of a utility model or design patent are reserved.

43.27 Fuel pressure sensor diagnosis

Data Definition

Name	Mode	Coded Limits	Display Limits	Resolution	Unit
ERR_SYM_FUP	O/V	0H 1H 2H 4H 8H	NO_SYM SYM_0 SYM_1 SYM_2 SYM_3	-	-
Detected symptom FUP sensor					
LV_CDN_DIAG_FUP	V	0... 1H	0 ...1	1	-
Status od diagnosis for FUP sensor					
LV_END_DIAG_FUP	V	0... 1H	0 ...1	1	-
End of diagnosis for FUP sensor diagnosis					
LV_ERR_FUP	O/V	0... 1H	0 ...1	1	-
FUP sensor error detected					

Input Data

LV_IGK {p. 24082}	LV_INH_ERR_FUP {p. 12171}	VP_FUP_MES {p. 11886}	

Calibration Data

Name	Mode	Coded Limits	Display Limits	Resolution	Unit
C_VP_FUP_MES_MAX_DIAG	V	0... 7FFFH	0... 4.999847412109	152.588e-6	V
Threshold value VP_FUP_MES to detect Short circuit in signal wire to VB					
C_VP_FUP_MES_MIN_DIAG	V	0... 7FFFH	0... 4.999847412109	152.588e-6	V
Threshold value VP_FUP_MES to detect Short circuit in signal wire to ground or wire break					

General Information

This module contains the diagnosis for high pressure fuel sensor.
There are two error-symptoms defined for the diagnosis as shown below,

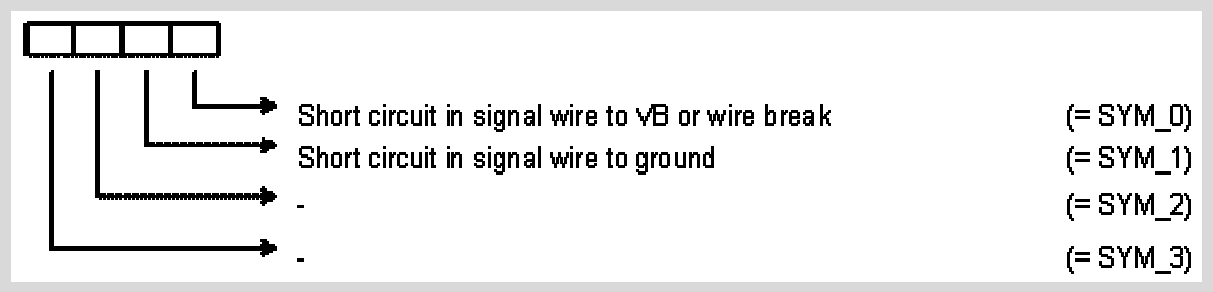

Figure 43.27.1: Error symptom description

Copyright ©Continental AG. Transmittal, reproduction, dissemination and/or editing of this document as well as utilisation of its contents and communication thereof to others without expressed authorisation are prohibited. Offenders will be held liable for payment of damages. All rights created by patent grant or registration of a utility model or design patent are reserved.

Note : The anti-bounce is performed internally in the software, the calibrations related to anti-bounce for each diagnosis (XXX) can be found in the calibration dataset.
C_ABC_INC_XXX – increment value of anti-bounce counter
C_ABC_DEC_XXX – decrement value of anti-bounce counter
C_ABC_MAX_XXX – maximum limit for anti-bounce counter

XXX represents the respective diagnosis.

▶ Application Conditions

Activation:

```
IF(1)       LV_IGK = 1 AND LV_INH_ERR_FUP = 0
THEN(1)     LV_CDN_DIAG_FUP = 1
           (diagnosis is active)
ELSE(1)     LV_CDN_DIAG_FUP = 0
           (diagnosis is inactive)
ENDIF
```

Recurrence: 40 ms

▶ Function Description

The diagnosis is active only if there is no inhibition. In case the diagnosis is active, the diagnostic condition is always true.

The electrical diagnosis is capable of detecting two errors,

1. Short circuit in signal wire to Battery or wire break or open circuit (SCP/OC)
2. Short circuit in signal wire to Ground (SCG)

The analog voltage signal at the A/D-Input of the ECU is compared against calibratable voltage thresholds for distinguishing b/w SCP and SCG errors.

43.27.1 Error detection :

Short circuit in signal wire to VB or wire break error :
If the fuel pressure sensor voltage exceeds a calibratable threshold (C_VP_FUP_MES_MAX_DIAG), then the SCP symptom is triggered. The SCP error status is updated after anti-bounce filtering.

Short circuit in signal wire to ground :
If the fuel pressure sensor voltage is below a calibratable threshold (C_VP_FUP_MES_MIN_DIAG), then the SCG symptom is triggered. The SCG error status is updated after anti-bounce filtering.

```
IF(1)       VP_FUP_MES  >  C_VP_FUP_MES_MAX_DIAG
THEN(1)     Symptom "Short circuit in signal wire to VB or wire break" is
            active, debounce counter increment
            ERR_SYM_FUP = 1H
            LV_ERR_FUP= 1     (after debounce)
ELSE(1)
            IF(2)     VP_FUP_MES  <   C_VP_FUP_MES_MIN_DIAG
            THEN(2)   Symptom "Short circuit in signal wire to ground"
                      is active, debounce counter increment
                      ERR_SYM_ FUP = 2H
                      LV_ERR_FUP= 1    (after debounce)
```

Copyright ©Continental AG. Transmittal, reproduction, dissemination and/or editing of this document as well as utilisation of its contents and communication thereof to others without expressed authorisation are prohibited. Offenders will be held liable for payment of damages. All rights created by patent grant or registration of a utility model or design patent are reserved.

```
        ELSE(2)  Both symptoms (SCP and SCG) inactive, both debounce
                 counters (SCP and SCG) decrement
                 ERR_SYM_FUP = 0H
                 LV_ERR_FUP = 0  (after debounce)
        ENDIF(2)
ENDIF(1)
```

Copyright ©Continental AG. Transmittal, reproduction, dissemination and/or editing of this document as well as utilisation of its contents and communication thereof to others without expressed authorisation are prohibited. Offenders will be held liable for payment of damages. All rights created by patent grant or registration of a utility model or design patent are reserved.

43.28 Fuel pressure sensor diagnosis (Appl. Inc.)

Data Definition

Name	Mode	Coded Limits	Display Limits	Resolution	Unit
LV_INH_ERR_FUP	O/V	0... 1H	0 ...1	1	-
Inhibition condition for fuel pressure sensor diagnosis					

Calibration Data

Name	Mode	Coded Limits	Display Limits	Resolution	Unit
C_ABC_INC_FUP	V	0... FFH	0... 255	1	-
Increment debounce counter					
C_ABC_MAX_FUP	V	1... FFH	1... 255	1	-
Maximum value debounce counter					

Configuration Data

Name	Mode	Coded Limits	Display Limits	Resolution	Unit
NC_FID_ERR_FUP	-	0... FFFFH	0... 65535	1	-
Run the fuel pressure sensor diagnosis					
NC_IDX_ERR_FUP_H	-	1... FFFFH	1... 65535	1	-
Fuel pressure sensor diagnosis, short circiut or wire break					
NC_IDX_ERR_FUP_L	-	1... FFFFH	1... 65535	1	-
fuel pressure sensor diagnosis, short circuit or wire to ground					

Import actions:

ACTION_FARM_GetPermission(**IN** <PRM_FID>, **OUT** <PRM_LV_PRMS>)

Error treatment

Failure Identifier	Symptom Description	Nr	OBD Sym DTC	Filter Type	CARB class
Failure Description	**Diagnostic Description**				
FUP	NC_IDX_ERR_FUP_H	0		STD	CC
Fuel pressure sensor diagnsis	*Fuel pressure sensor diagnosis, short circiut or wire break*				
	NC_IDX_ERR_FUP_L	1			
	fuel pressure sensor diagnosis, short circuit or wire to ground				
		2			
		3			

Copyright ©Continental AG. Transmittal, reproduction, dissemination and/or editing of this document as well as utilisation of its contents and communication thereof to others without expressed authorisation are prohibited. Offenders will be held liable for payment of damages. All rights created by patent grant or registration of a utility model or design patent are reserved.

Definition of the behavior of the initialization				
ERR-Flag		Reset at ECU Reset	reset at Key ON	Latch error on fail
		NO	NO	NO
ABC	ABC-class	MAX-INC after Failure	No Reset at NEWDC	Init on Condition Loss
	ABC	NO	NO	NO
Description of the implementation				
	prestore FRF	RBM	Similar conditions	
	-	-		

General Information

Depending on certain conditions the fuel pressure sensor diagnosis for the low pressure system must be inhibited.

Error treatment is implemented to fit to UDGI needs.

Note: All debouncing is defined centrally within ERRM/UDGI, the diagnostics specific calibration is kept to fulfill the necessary interface but has no effect and hidden from the application system.

Appendix to Error treatment:

Inhibited by FIDs:

Diagnostic instance	FID	TYPE
NC_IDX_ERR_FUP_H	NC_FID_ERR_FUP	INH
NC_IDX_ERR_FUP_L	NC_FID_ERR_FUP	INH

Application Conditions

Initialisation: `(at reset and LV_IGK = 0- -> 1):  LV_INH_DIAG_FUP = 0`

Recurrence: `40 ms`

Function Description

```
LV_INH_ERR_FUP = not(ACTION_FARM_GetPermission(NC_FID_ERR_FUP))
```

Copyright ©Continental AG. Transmittal, reproduction, dissemination and/or editing of this document as well as utilisation of its contents and communication thereof to others without expressed authorisation are prohibited. Offenders will be held liable for payment of damages. All rights created by patent grant or registration of a utility model or design patent are reserved.

43.29 Fuel pressure power stage diagnosis

▶ Data Definition

Name	Mode	Coded Limits	Display Limits	Resolution	Unit
CDN_DIAG_VCV_H	V	0... 7H	0 ...7	1	-
Diagnosis condition for each symptom of VCV high side switch					
CDN_DIAG_VCV_L	V	0... 7H	0 ...7	1	-
Diagnosis condition for each symptom of VCV low side switch					
CTR_RST_ENA_DIAG_VCV	V	0... FFH	0... 255	1	-
Counter used to enable the VCV powerstage diagnosis a calibratable time after ECU reset					
ERR_DIAG_VCV_H	V	0... 7H	0 ...7	1	-
Raw value of error symptom for VCV high side switch (only parameter)					
ERR_DIAG_VCV_L	V	0... 7H	0 ...7	1	-
Raw value of error symptom for VCV low side switch (only parameter)					
ERR_SYM_VCV_OC	V	0H 1H 2H 4H 8H	NO_SYM SYM_0 SYM_1 SYM_2 SYM_3	-	-
Detected error symptom VCV diagnosis for "open circuit"					
ERR_SYM_VCV_SCG	V	0H 1H 2H 4H 8H	NO_SYM SYM_0 SYM_1 SYM_2 SYM_3	-	-
Detected error symptom VCV diagnosis for "short circuit ground"					
ERR_SYM_VCV_SCP	V	0H 1H 2H 4H 8H	NO_SYM SYM_0 SYM_1 SYM_2 SYM_3	-	-
Symptoms of the diagnosis instance VCV_SCP					
LV_CDN_DIAG_VCV_OC	V	0... 1H	0 ...1	1	-
Diagnosis condition for diagnosis instance volume control valve VCV_OC					
LV_CDN_DIAG_VCV_SCG	V	0... 1H	0 ...1	1	-
Diagnosis condition volume control valve diagnosis VCV_SCG					
LV_CDN_DIAG_VCV_SCP	V	0... 1H	0 ...1	1	-
Diagnosis condition volume control valve diagnosis VCV_SCP					
LV_ENA_DIAG_VCV	V	0... 1H	0 ...1	1	-
Diagnosis enabling condition for diagnosis instance volume control valve VCV					
LV_END_DIAG_VCV_OC	V	0... 1H	0 ...1	1	-
End of diagnosis VCV diagnosis for "open circuit"					
LV_END_DIAG_VCV_SCG	V	0... 1H	0 ...1	1	-
End of diagnosis VCV diagnosis					
LV_END_DIAG_VCV_SCP	V	0... 1H	0 ...1	1	-
Diagnostic performed at least one time within current driving cycle					
LV_ERR_VCV_OC	O/V	0... 1H	0 ...1	1	-
Boolean for error currently present on VCV signal for "open circuit"					
LV_ERR_VCV_SCG	O/V	0... 1H	0 ...1	1	-

Copyright ©Continental AG. Transmittal, reproduction, dissemination and/or editing of this document as well as utilisation of its contents and communication thereof to others without expressed authorisation are prohibited. Offenders will be held liable for payment of damages. All rights created by patent grant or registration of a utility model or design patent are reserved.

Name	Mode	Coded Limits	Display Limits	Resolution	Unit
Boolean for error currently present on VCV signal for "short circuit ground"					
LV_ERR_VCV_SCP	O/V	0... 1H	0 ...1	1	-
"short curcuit to plus" -error flag for diagnosis instance VCV_1					

Input Data

ECU_STATE {p. 5858}	LV_CDN_VB_OBD1 {p. 24053}	LV_FUP_LIH_DPS_DI {p. 12184}	LV_IGK {p. 24082}
LV_INH_ERR_VCV {p. 12180}	LV_T_DUR_MIN_CUR_OFF_VCV_OC {p. 12180}	NC_SEG_CLC_VCV_DIAG {p. 11813}	

Calibration Data

Name	Mode	Coded Limits	Display Limits	Resolution	Unit
C_ABC_INC_VCV_OC	V	0... FFH	0... 255	1	-
Anti bounce counter increment for diagnosis instance VCV_OC					
C_ABC_INC_VCV_SCG	V	0... FFH	0... 255	1	-
Anti bounce counter increment for diagnosis instance VCV_SCG					
C_ABC_INC_VCV_SCP	V	0... FFH	0... 255	1	-
Anti bounce counter increment for diagnosis instance VCV_SCP					
C_ABC_MAX_VCV_OC	V	1... FFH	1... 255	1	-
Anti bounce counter maximum value for diagnosis instance VCV_OC					
C_ABC_MAX_VCV_SCG	V	1... FFH	1... 255	1	-
Anti bounce counter maximum value for diagnosis instance VCV_SCG					
C_ABC_MAX_VCV_SCP	V	1... FFH	1... 255	1	-
Anti bounce counter maximum value for diagnosis instance VCV_SCP					
C_CTR_RST_MIN_ENA_DIAG_VCV	V	0... FFH	0... 255	1	-
Calibratable number of recurrences to enable the VCV powerstage diagnosis after ECU reset					
LC_INH_DIAG_VCV_H_SCP	V	0... 1H	0 ...1	1	-
Bit to disable SCP diagnosis from VCV high side					

Import actions:

ACTION_INFR_GetElDiagVcvHss(**IN** <PRM_PUMP_NR>, **OUT** <PRM_CDN_DIAG_VCV_HSS>, **OUT** <PRM_ERR_DIAG_VCV_HSS>)

ACTION_INFR_GetElDiagVcvLss(**IN** <PRM_PUMP_NR>, **OUT** <PRM_CDN_DIAG_VCV_LSS>, **OUT** <PRM_ERR_DIAG_VCV_LSS>)

Error treatment

Copyright ©Continental AG. Transmittal, reproduction, dissemination and/or editing of this document as well as utilisation of its contents and communication thereof to others without expressed authorisation are prohibited. Offenders will be held liable for payment of damages. All rights created by patent grant or registration of a utility model or design patent are reserved.

Diagnostic Identifier Diagnostic Description	Symptom Description	Nr	OBD Sym DTC	OBD Global DTC	Filter Type	CARB class
VCV_SCP	Short circuit to battery	0			STD_INI	CC
Short circuit to battery at VCV	Not used	1				
	Not used	2				
	Not used	3				

Diagnostic Identifier Diagnostic Description	Symptom Description	Nr	OBD Sym DTC	OBD Global DTC	Filter Type	CARB class
VCV_SCG	Not used	0			STD_INI	CC
Short circuit to ground at VCV	Short circuit to ground	1				
	Not used	2				
	Not used	3				

Diagnostic Identifier Diagnostic Description	Symptom Description	Nr	OBD Sym DTC	OBD Global DTC	Filter Type	CARB class
VCV_OC	Not used	0			STD_INI	CC
Open circuit at VCV	Not used	1				
	Open circuit	2				
	Not used	3				

▶ General Information

This module is for power stage diagnosis of the VCV (Volume control valve) of the fuel system.

Note :
The anti-bounce is performed internally in the software, the calibrations related to anti-bounce for each diagnosis (XXX) can be found in the calibration dataset.
C_ABC_INC_XXX – increment value of anti-bounce counter
C_ABC_DEC_XXX – decrement value of anti-bounce counter
C_ABC_MAX_XXX – maximum limit for anti-bounce counter

XXX represents the respective diagnostic instances.

The VCV is mounted at the inlet of the High pressure pump. It controls the amount of fuel entering from the low pressure system into the compression chamber of the pump. The VCV is operated by two power stages, one on the low side and other on the high side.

Copyright ©Continental AG. Transmittal, reproduction, dissemination and/or editing of this document as well as utilisation of its contents and communication thereof to others without expressed authorisation are prohibited. Offenders will be held liable for payment of damages. All rights created by patent grant or registration of a utility model or design patent are reserved.

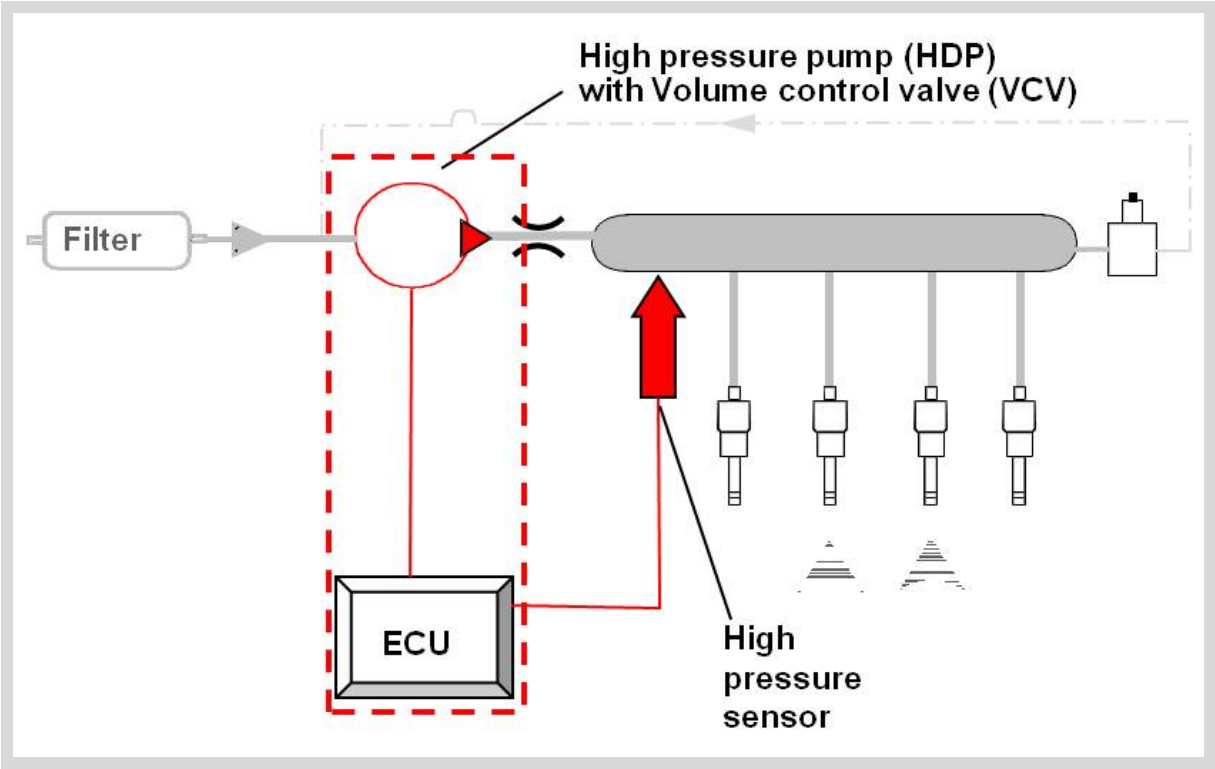

Figure 43.29.1: High pressure system showing the Pump with the VCV

This particular diagnosis is performed in order to detect the electrical failures in the low side and high side drivers.

The electrical diagnosis is used to detect the following errors,
1. Open circuit (OC)
2. Short circuit to Ground (SCG)
3. Short circuit to Positive/Battery (SCP)

43.29.1 Diagnostic information from infrastructure

▶ General Information

This function reads the failure information from the infrastructure for the highside and lowside switches of the VCV. The recurrence rate for the diagnosis when the engine is running is a multiple of segments (depending on the configuration NC_SEG_CLC_VCV_DIAG) and during engine stop, it is 20 ms.

▶ Application Conditions

Initialisation:

```
at reset:
  CDN_DIAG_VCV_H = 0
  CDN_DIAG_VCV_L = 0
  ERR_DIAG_VCV_H = 0
  ERR_DIAG_VCV_L = 0
```

Activation:

```
20ms:                                LV_ES == 1
all NC_SEG_CLC_VCV_DIAG segments:    LV_ES == 0
```

Deactivation: `never`

Recurrence: `20ms, all NC_SEG_CLC_VCV_DIAG segments`

Copyright ©Continental AG. Transmittal, reproduction, dissemination and/or editing of this document as well as utilisation of its contents and communication thereof to others without expressed authorisation are prohibited. Offenders will be held liable for payment of damages. All rights created by patent grant or registration of a utility model or design patent are reserved.

▶ Function Description

The infrastructure actions return both the diagnostic condition status and the diagnostic error status for the respective switches. An individual calibration (LC_INH_DIAG_VCV_H_SCP) exists through which the SCP diagnosis from VCV high side can be disabled. However, this calibration is typically not used and is set to zero.

```
ACTION_INFR_GetElDiagVcvHss (IN<Pump_nr=0>, OUT< CDN_DIAG_VCV_H>,
                             OUT< ERR_DIAG_VCV_H>)

ACTION_INFR_GetElDiagVcvLss (IN<Pump_nr=0>, OUT< CDN_DIAG_VCV_L>,
                             OUT< ERR_DIAG_VCV_L>)

IF   LC_INH_DIAG_VCV_H_SCP = 1
THEN CDN_DIAG_VCV_H[bit0] = 0
ENDIF
```

43.29.2 Diagnosis

▶ General Information

Since the VCV is driven with high side and low side switch, both diagnostic information are used to detect short circuit and open circuit errors.
The symptoms of open circuit diagnosis short circuit diagnosis (SCG and SCP) of high side and low side are clustered in one single error for each of the diagnosis, i.e. individual symptoms for OC, SCP and SCG are calculated for both high side and low side separately, but the OC, SCG and SCP errors are set without the distinction of being set through symptoms of high side or through symptoms of low side.

▶ Application Conditions

Initialisation:

```
ERRM values regarding STD_INI (filter type)
at reset:
  CTR_RST_ENA_DIAG_VCV = 0
  LV_ENA_DIAG_VCV = 0
```

Activation: `20ms:  always`

Deactivation: `never`

Recurrence: `20ms`

▶ Function Description

Setting of general condition for VCV diagnosis depends on the following,
- Sufficient battery voltage to perform the diagnosis
- The VCV power stage is not disabled
- VCV diagnosis is not inhibited
- No actuator test is initiated for VCV

```
setting of general condition for VCV diagnosis:
If CTR_RST_ENA_DIAG_VCV < 255
Then
  CTR_RST_ENA_DIAG_VCV = CTR_RST_ENA_DIAG_VCV + 1
Endif

LV_ENA_DIAG_VCV = (    (LV_IGK = 1 OR ECU_STATE = 'PWL')
                   AND  LV_CDN_VB_OBD1
                   AND NOT(LV_FUP_LIH_DPS_DI)
                   AND NOT(LV_INH_ERR_VCV)
                   AND  CTR_RST_ENA_DIAG_VCV >= C_CTR_RST_MIN_ENA_DIAG_VCV
                   )
```

Copyright ©Continental AG. Transmittal, reproduction, dissemination and/or editing of this document as well as utilisation of its contents and communication thereof to others without expressed authorisation are prohibited. Offenders will be held liable for payment of damages. All rights created by patent grant or registration of a utility model or design patent are reserved.

Copyright ©Continental AG. Transmittal, reproduction, dissemination and/or editing of this document as well as utilisation of its contents and communication thereof to others without expressed authorisation are prohibited. Offenders will be held liable for payment of damages. All rights created by patent grant or registration of a utility model or design patent are reserved.

For SCP diagnosis :
The diagnostic condition is enabled after the status is received through CDN_DIAG_VCV_H (bit 0) or CDN_DIAG_VCV_L (bit 0) from the action infrastructure. After the diagnostic condition is set, the diagnostic error status is received through ERR_DIAG_VCV_H (bit 0) and ERR_DIAG_VCV_L (bit 0) status from the action infrastructure. Existence of diagnostic error status in any of the switches (high side or low side), triggers the final error status update after anti-bounce filtering. The end of diagnosis flag and error status flag are set through the ERRM (Error management).

For SCG diagnosis :
The diagnostic condition is enabled after the status is received through CDN_DIAG_VCV_H (bit 1) or CDN_DIAG_VCV_L (bit 1) from the action infrastructure. After the diagnostic condition is set, the diagnostic error status is received through ERR_DIAG_VCV_H (bit 1) and ERR_DIAG_VCV_L (bit 1) status from the action infrastructure. Existence of diagnostic error status in any of the switches (high side or low side), triggers the final error status update after anti-bounce filtering. The end of diagnosis flag and error status flag are set through the ERRM (Error management).
For OC diagnosis :
Due to the design of ATIC 140, the OC diagnosis is done differently compared to the SCP and SCG diagnosis. If a positive status is received through CDN_DIAG_VCV_H (bit 2) and ERR_DIAG_VCV_H (bit 2) or CDN_DIAG_VCV_L (bit 2) and ERR_DIAG_VCV_L (bit 2) from the action infrastructure, then the diagnostic condition for OC diagnosis is enabled and it infers that there is no OC symptom active in either the low side or the high side switch.
The presence of OC symptom is detected as follows,

If
(HS Diagnostic condition status (SCP) = 1 and HS Error status (SCP) = 0 and
HS Diagnostic condition status (OC) = 1 and HS Error status (OC) = 0 and
LS Diagnostic condition status (SCG) = 1 and LS Error status (SCG) = 0 and
LS Diagnostic condition status (OC) = 1 and LS Error status (OC) = 0)
or
(LS Diagnostic condition status (SCP, SCG, OC) = 1 and LS Error status (SCP, SCG, OC) = 0 and
HS Diagnostic condition status (OC) = 1 and HS Error status (OC) = 1)
or
(LS Diagnostic condition status (SCP, SCG, OC) = 1 and LS Error status (SCP, SCG, OC) = 0 and
HS Diagnostic condition status (SCP, SCG, OC) = 1 and HS Error status (OC) = 0)

Then
Symptom for OC present
Endif

Triggering of the final error status update is done after anti-bounce filtering. The end of diagnosis flag and error status flag are set through the ERRM (Error management).

```
symptom detection for VCV diagnosis:
IF   LV_ENA_DIAG_VCV(n-1) = 1 AND  LV_ENA_DIAG_VCV(n) = 1
THEN
  check if SCP is detected at LSS or HSS:
  IF CDN_DIAG_VCV_H[bit0] = 1  OR  CDN_DIAG_VCV_L[bit0] = 1
  THEN LV_CDN_DIAG_VCV_SCP = 1
    IF (  (ERR_DIAG_VCV_H[bit0] = 1 AND CDN_DIAG_VCV_H[bit0] = 1)
       OR (ERR_DIAG_VCV_L[bit0] = 1 AND CDN_DIAG_VCV_L[bit0] = 1)
       )
    THEN
      ERR_SYM_VCV_SCP = SYM_0
    ELSE
      ERR_SYM_VCV_SCP = NO_SYM
```

```
    ENDIF
  ELSE
    LV_CDN_DIAG_VCV_SCP = 0
  ENDIF

  check if SCG is detected at LSS or HSS:
  IF CDN_DIAG_VCV_H[bit1] = 1  OR  CDN_DIAG_VCV_L[bit1] = 1
  THEN
    LV_CDN_DIAG_VCV_SCG = 1
    IF  (  (ERR_DIAG_VCV_H[bit1] = 1 AND CDN_DIAG_VCV_H[bit1] = 1)
       OR (ERR_DIAG_VCV_L[bit1] = 1 AND CDN_DIAG_VCV_L[bit1] = 1)
       )
    THEN
      ERR_SYM_VCV_SCG = SYM_1
    ELSE
      ERR_SYM_VCV_SCG = NO_SYM
    ENDIF
  ELSE
    LV_CDN_DIAG_VCV_SCG = 0
  ENDIF

  check if OC is detected at LSS or HSS:
  IF (   CDN_DIAG_VCV_H[bit2] = 1 AND ERR_DIAG_VCV_H[bit2] = 1
     AND CDN_DIAG_VCV_L[bit2] = 1 AND ERR_DIAG_VCV_L[bit2] = 1
     AND  LV_T_DUR_MIN_CUR_OFF_VCV_OC
     )
  THEN
    good case was detected
    LV_CDN_DIAG_VCV_OC = 1
    ERR_SYM_VCV_OC = NO_SYM
  ELSE
    IF (     (  (   CDN_DIAG_VCV_H[bit0] = 1 AND ERR_DIAG_VCV_H[bit0] = 0
               AND CDN_DIAG_VCV_H[bit2] = 1 AND ERR_DIAG_VCV_H[bit2] = 0
               AND CDN_DIAG_VCV_L[bit1] = 1 AND ERR_DIAG_VCV_L[bit1] = 0
               AND  CDN_DIAG_VCV_L[bit2] = 1  AND ERR_DIAG_VCV_L[bit2] = 0
               )
             OR (   CDN_DIAG_VCV_L = 7        AND ERR_DIAG_VCV_L = 0
               AND CDN_DIAG_VCV_H[bit2] = 1 AND  ERR_DIAG_VCV_H[bit2] = 1
               )
             OR (   CDN_DIAG_VCV_L = 7        AND ERR_DIAG_VCV_L = 0
               AND CDN_DIAG_VCV_H = 7        AND ERR_DIAG_VCV_H = 0
               )
             )
       AND  LV_T_DUR_MIN_CUR_OFF_VCV_OC
       )
    THEN
      error case was detected
      LV_CDN_DIAG_VCV_OC = 1
      ERR_SYM_VCV_OC = SYM_2
    ELSE
      LV_CDN_DIAG_VCV_OC = 0
    ENDIF
  ENDIF
ELSE
  LV_CDN_DIAG_VCV_SCP = 0
  LV_CDN_DIAG_VCV_SCG = 0
  LV_CDN_DIAG_VCV_OC = 0
ENDIF
```

Copyright ©Continental AG. Transmittal, reproduction, dissemination and/or editing of this document as well as utilisation of its contents and communication thereof to others without expressed authorisation are prohibited. Offenders will be held liable for payment of damages. All rights created by patent grant or registration of a utility model or design patent are reserved.

43.30 Fuel pressure power stage diagnosis (Appl. Inc.)

Data Definition

Name	Mode	Coded Limits	Display Limits	Resolution	Unit
ANG_DLY_CUR_OFF_VCV	V	800... F800H	-720 ...720	0.0234375	°CRK
Delta angle between end and begin of next current feed of the VCV (volume control valve)					
LV_INH_ERR_VCV	O/V	0... 1H	0 ...1	1	-
Inhibition of VCV diagnosis					
LV_T_DUR_MIN_CUR_OFF_VCV_OC	O/V	0... 1H	0 ...1	1	-
Flag, that indicates if a minimum VCV off time is given for a correct result of VCV_OC diagnositic					

Input Data

ANG_CUR_OFF_VCV {p. 11982}	ANG_CUR_ON_VCV {p. 11982}	N_32 {p. 8079}	NC_NR_PUMP_LOBE {p. 11813}

Calibration Data

Name	Mode	Coded Limits	Display Limits	Resolution	Unit
ID_DUR_MIN_CUR_OFF_VCV_OC	V	0... 1H	0 ...1	1	-
LDP_ANG_DLY_ID_DUR_MN_CUR_OFF_VCV_OC	6	800... F800H	-720 ...720	0.0234375	°CRK
LDP_N_ID_DUR_MN_CUR_OFF_VCV_OC	6	0... FFH	0... 8160	32	rpm
Calibratable lookup table delivering a flag, that indicates if a minimum VCV off time is given for a correct result of VCV_OC diagnositic					

Configuration Data

Name	Mode	Coded Limits	Display Limits	Resolution	Unit
NC_FID_ERR_VCV	-	0... FFFFH	0... 65535	1	-
Run the powerstage diagnosis for VCV control					
NC_IDX_ERR_VCV_OC	-	1... FFFFH	1... 65535	1	-
Diagnostic index for volume control valve stage diagnosis open circuit					
NC_IDX_ERR_VCV_SCG	-	1... FFFFH	1... 65535	1	-
Diagnostic index for volume control valve stage diagonsis short circuit ground					
NC_IDX_ERR_VCV_SCP	-	1... FFFFH	1... 65535	1	-
Diagnostic index for volume control valve stage diagnosis short circuit plus					

Import actions:

ACTION_FARM_GetPermission(**IN** <PRM_FID>, **OUT** <PRM_LV_PRMS>)

Error treatment

Copyright ©Continental AG. Transmittal, reproduction, dissemination and/or editing of this document as well as utilisation of its contents and communication thereof to others without expressed authorisation are prohibited. Offenders will be held liable for payment of damages. All rights created by patent grant or registration of a utility model or design patent are reserved.

Failure Identifier	Symptom Description	Nr	OBD Sym DTC	Filter Type	CARB class
Failure Description	**Diagnostic Description**				
VCV_OC		0		STD_INI	CC
VCV open circuit diagnosis					
		1			
	NC_IDX_ERR_VCV_OC	2			
	Diagnostic index for volume control valve stage diagnosis open circuit				
		3			

Definition of the behavior of the initialization				
ERR-Flag		Reset at ECU Reset	reset at Key ON	Latch error on fail
		YES	YES	NO
ABC	ABC-class	MAX-INC after Failure	No Reset at NEWDC	Init on Condition Loss
	ABC	NO	NO	NO
Description of the implementation				
	prestore FRF	RBM	Similar conditions	
	-	-		

Failure Identifier	Symptom Description	Nr	OBD Sym DTC	Filter Type	CARB class
Failure Description	**Diagnostic Description**				
VCV_SCG		0		STD_INI	CC
Short circuit to ground at VCV					
	NC_IDX_ERR_VCV_SCG	1			
	Diagnostic index for volume control valve stage diagonsis short circuit ground				
		2			
		3			

Definition of the behavior of the initialization				
ERR-Flag		Reset at ECU Reset	reset at Key ON	Latch error on fail
		YES	YES	NO
ABC	ABC-class	MAX-INC after Failure	No Reset at NEWDC	Init on Condition Loss
	ABC	NO	NO	NO
Description of the implementation				
	prestore FRF	RBM	Similar conditions	
	-	-		

Copyright ©Continental AG. Transmittal, reproduction, dissemination and/or editing of this document as well as utilisation of its contents and communication thereof to others without expressed authorisation are prohibited. Offenders will be held liable for payment of damages. All rights created by patent grant or registration of a utility model or design patent are reserved.

Failure Identifier	Symptom Description	Nr	OBD Sym DTC	Filter Type	CARB class
Failure Description	**Diagnostic Description**				
VCV_SCP	NC_IDX_ERR_VCV_SCP	0		STD_INI	CC
Short circuit to battery at VCV	*Diagnostic index for volume control valve stage diagnosis short circuit plus*				
		1			
		2			
		3			

Definition of the behavior of the initialization				
ERR-Flag		Reset at ECU Reset	reset at Key ON	Latch error on fail
		YES	YES	NO
ABC	ABC-class	MAX-INC after Failure	No Reset at NEWDC	Init on Condition Loss
	ABC	NO	NO	NO
Description of the implementation				
	prestore FRF	RBM	Similar conditions	
	-	-		

General Information

In this module the inhibition of the eletrical VCV diagnosis is handled.

Appendix to Error treatment:

Inhibited by FIDs:

Diagnostic instance	FID	TYPE
NC_IDX_ERR_VCV_OC	NC_FID_ERR_VCV	INH
NC_IDX_ERR_VCV_SCG	NC_FID_ERR_VCV	INH
NC_IDX_ERR_VCV_SCP	NC_FID_ERR_VCV	INH

Application Conditions

Initialisation: `All 0 at reset`

Activation: `always`

Deactivation: `never`

Recurrence: `20 ms`

Function Description

Copyright©Continental AG. Transmittal, reproduction, dissemination and/or editing of this document as well as utilisation of its contents and communication thereof to others without expressed authorisation are prohibited. Offenders will be held liable for payment of damages. All rights created by patent grant or registration of a utility model or design patent are reserved.

```
LV_INH_ERR_VCV = not(ACTION_FARM_GetPermission(NC_FID_ERR_VCV))

If NC_NR_PUMP_LOBE <> 0
Then
  ANG_DLY_CUR_OFF_VCV =
    ( (720°CRK / NC_NR_PUMP_LOBE)
    - MAX(MIN(ANG_CUR_ON_VCV - ANG_CUR_OFF_VCV
              ,720°CRK / NC_NR_PUMP_LOBE
              )
         ,0°CRK
         )
    )
Else
  ANG_DLY_CUR_OFF_VCV = 0°CRK
Endif

LV_T_DUR_MIN_CUR_OFF_VCV_OC =
  ID_DUR_MIN_CUR_OFF_VCV_OC(ANG_DLY_CUR_OFF_VCV, N_32)
```

Copyright ©Continental AG. Transmittal, reproduction, dissemination and/or editing of this document as well as utilisation of its contents and communication thereof to others without expressed authorisation are prohibited. Offenders will be held liable for payment of damages. All rights created by patent grant or registration of a utility model or design patent are reserved.

43.31 Fuel pressure limp home management

Data Definition

Name	Mode	Coded Limits	Display Limits	Resolution	Unit
LV_FUEL_MASS_AD_ENA	O/V	0... 1H	0 ...1	1	-
Logical FARM information for enabling fuel mass adaptation					
LV_FUP_AD_ENA	O/V	0... 1H	0 ...1	1	-
Fuel pressure sensor adaptation enabled					
LV_FUP_EFP_MES_LIH_REQ	O/V	0... 1H	0 ...1	1	-
Request for fuel low pressure default value in case of error detection					
LV_FUP_LIH_DPS_DI	O/V	0... 1H	0 ...1	1	-
Logical FARM information for disabling VCV powerstage					
LV_FUP_LIH_H_PRS_CTL_REQ	O/V	0... 1H	0 ...1	1	-
Logical variable requesting fuel high pressure control limphome					
LV_FUP_LIH_L_PRS_CTL_REQ	O/V	0... 1H	0 ...1	1	-
Logical variable requesting fuel low pressure control limphome					
LV_FUP_LIH_REQ	O/V	0... 1H	0 ...1	1	-
Limp home mode for HPP requested					
LV_FUP_MES_LIH_REQ	O/V	0... 1H	0 ...1	1	-
Request for fuel pressure default value in case of error detection					
LV_FUP_MIN_AD_ENA	O/V	0... 1H	0 ...1	1	-
Minimum fuel pressure adaptation enabled via FARM					
LV_LOW_RON_DET_ENA	O/V	0... 1H	0 ...1	1	-
Activation of gasoline octane RON index is allowed					
LV_STATE_RON_OK_ENA	O/V	0... 1H	0 ...1	1	-
Release of faulty STATE_RON is allowed					
LV_VCV_SL_ENA	O/V	0... 1H	0 ...1	1	-
flag indicating that solft landing functionality is permitted by FARM matrix					

Input Data

LV_CRASH {p. 23896}	LV_FRS_ERR_CAN {p. 14320}	LV_FTL_VLD_SAVE {p. 11604}	LV_KNK_DET_ENA {p. 22165}
TCO {p. 8846}			

Calibration Data

Name	Mode	Coded Limits	Display Limits	Resolution	Unit
C_TCO_MIN_LOW_RON	-	0... FEH	-48... 142.5	0.75	°C
Threshold for activation of whole LOW RON function					

Copyright ©Continental AG. Transmittal, reproduction, dissemination and/or editing of this document as well as utilisation of its contents and communication thereof to others without expressed authorisation are prohibited. Offenders will be held liable for payment of damages. All rights created by patent grant or registration of a utility model or design patent are reserved.

Configuration Data

Name	Mode	Coded Limits	Display Limits	Resolution	Unit
NC_FID_FUP_AD_ENA	-	0... FFFFH	0... 65535	1	-
Identifier to enable the fuel pressure offset adaptation					
NC_FID_FUP_DPS_DI	-	0... FFFFH	0... 65535	1	-
Identifier to disable the VCV powerstage					
NC_FID_FUP_EFP_MES_ENA	-	0... FFFFH	0... 65535	1	-
Identifier to enable fuel low pressure determination					
NC_FID_FUP_FUEL_MASS_AD	-	0... FFFFH	0... 65535	1	-
Identifier to enable fuel mass adaptation					
NC_FID_FUP_LIH_H_PRS_CTL	-	0... FFFFH	0... 65535	1	-
Identifier to remove high pressure limp-home request					
NC_FID_FUP_LIH_L_PRS_CTL	-	0... FFFFH	0... 65535	1	-
Identifier to remove low pressure limp-home request					
NC_FID_FUP_MES_ENA	-	0... FFFFH	0... 65535	1	-
Identifier to enable fuel pressure determination					
NC_FID_FUP_MIN_AD_ENA	-	0... FFFFH	0... 65535	1	-
Identifier to enable the fuel pressure minimum adaptation					
NC_FID_LOW_RON_DET_ENA	-	0... FFFFH	0... 65535	1	-
Identifier to enable low research octane number (RON) detection					
NC_FID_STATE_RON_OK_ENA	-	0... FFFFH	0... 65535	1	-
Identifier to enable release of faulty STATE_RON					
NC_FID_VCV_SL	-	0... FFFFH	0... 65535	1	-
Identifier to enable the VCV soft landing function					

Import actions:

ACTION_FARM_GetPermission(**IN** <PRM_FID>, **OUT** <PRM_LV_PRMS>)

General Information

This module is used to calculate all request flags for failure reactions inside the aggregate fuel supply (FUSL).

Note :

The function identifier (NC_FID_XXX) contains the calibrated error configuration in the Fault reaction manager (FARM). Existence of any errors which are configured to this function identifier return a value of zero from the action by setting the permission flag (LV_PRMS) to zero. However, the status of the permission can be observed via the LV_FID_INH_XXX of the respective identifier, and can be found as visible in the .a2l file.

Application Conditions

Initialisation: `on RST: set all variables to zero`

Activation: `always`

Deactivation: `never`

Recurrence: `10ms`

Copyright ©Continental AG. Transmittal, reproduction, dissemination and/or editing of this document as well as utilisation of its contents and communication thereof to others without expressed authorisation are prohibited. Offenders will be held liable for payment of damages. All rights created by patent grant or registration of a utility model or design patent are reserved.

▶ Function Description

1. The fuel mass adaptation is only enabled in case there are no errors set through the function identifier NC_FID_FUP_FUEL_MASS_AD.

```
LV_FUEL_MASS_AD_ENA = ACTION_FARM_GetPermission(NC_FID_FUP_FUEL_MASS_AD)
```

2. The fuel pressure sensor adaptation in the high pressure circuit is only enabled in case there are no errors set through the function identifier NC_FID_AD_ENA.

```
LV_FUP_AD_ENA = ACTION_FARM_GetPermission(NC_FID_FUP_AD_ENA)
```

3. In case there are errors set through the function identifier NC_FID_FUP_EFP_MES_ENA, then the Limp home mode due to errors in fuel pressure of low pressure circuit is enabled. Typically, fuel low pressure sensor errors are linked to the function identifier.

```
LV_FUP_EFP_MES_LIH_REQ =
  not(ACTION_FARM_GetPermission(NC_FID_FUP_EFP_MES_ENA))
```

4. The VCV power stage is disabled in case there are errors set through the function identifier NC_FID_FUP_DPS_DI. Also, the VCV power stage diagnosis is disabled if the limp home flag is active.
Typically, VCV errors are linked to the function identifier.

```
LV_FUP_LIH_DPS_DI = not(ACTION_FARM_GetPermission(NC_FID_FUP_DPS_DI))
```

5. The high pressure limp home mode is requested in case of errors set through the function identifier NC_FID_FUP_LIH_H_PRS_CTL_REQ which are corresponding to the errors in the high pressure system. During high pressure limp home, the fuel pressure control is performed in open loop mode.

```
LV_FUP_LIH_H_PRS_CTL_REQ =
not(ACTION_FARM_GetPermission(NC_FID_FUP_LIH_H_PRS_CTL))
```

6. The low pressure limp home mode is requested in case of a crash or if errors are set through the function identifier NC_FID_FUP_LIH_L_PRS_CTL_REQ which are corresponding to the errors in the low pressure system. During low pressure limp home, the high pressure system runs only with the (low) pressure available from the low pressure line.

```
LV_FUP_LIH_L_PRS_CTL_REQ =
not(ACTION_FARM_GetPermission(NC_FID_FUP_LIH_L_PRS_CTL)) OR  LV_CRASH
```

The limp home mode is requested for the high pressure pump (HPP) in case of limp home flag for low pressure system is active.

```
LV_FUP_LIH_REQ = LV_FUP_LIH_L_PRS_CTL_REQ
```

Copyright ©Continental AG. Transmittal, reproduction, dissemination and/or editing of this document as well as utilisation of its contents and communication thereof to others without expressed authorisation are prohibited. Offenders will be held liable for payment of damages. All rights created by patent grant or registration of a utility model or design patent are reserved.

7. The substitute value or limp home value of fuel pressure is considered for FUP calculation in case of errors set through the function identifier NC_FID_FUP_MES_ENA. Typically, fuel high pressure sensor errors are linked to the function identifier.

```
LV_FUP_MES_LIH_REQ = not(ACTION_FARM_GetPermission(NC_FID_FUP_MES_ENA))
```

8. The minimum fuel pressure adaptation is enabled in case there are no errors set through the function identifier NC_FID_FUP_MIN_AD_ENA.

```
LV_FUP_MIN_AD_ENA = ACTION_FARM_GetPermission(NC_FID_FUP_MIN_AD_ENA)
```

9. The VCV soft landing is only enabled in case there are no errors set through the function identifier NC_FID_VCV_SL.

```
LV_VCV_SL_ENA =  ACTION_FARM_GetPermission(NC_FID_VCV_SL)
```

10. Bad quality fuel detection (through LV_LOW_RON_DET_ENA) should only be active if knock detection is enabled and no errors set through the function identifier NC_FID_LOW_RON_DET_ENA and the coolant temperature is above a calibrated threshold C_TCO_MIN_LOW_RON.
The TCO limit is introduced in order to avoid wrong detection of fuel quality due to cold conditions, since knock tendency is low at low temperatures.

```
LV_LOW_RON_DET_ENA  = (ACTION_FARM_GetPermission(NC_FID_LOW_RON_DET_ENA)
                       AND LV_KNK_DET_ENA == 1 AND  TCO >= C_TCO_MIN_LOW_RON)
```

11. Good quality fuel detection (through LV_STATE_RON_OK_ENA) should only be active if there are no errors set through the function identifier NC_FID_STATE_RON_OK_ENA and fuel tank level sensor is ok. The fuel tank level validity is checked in order to make sure that the system is capable of detecting good quality fuel when refueling is done again.

```
LV_STATE_RON_OK_ENA =
  (  not(ACTION_FARM_GetPermission(NC_FID_STATE_RON_OK_ENA))
  or  LV_FRS_ERR_CAN
  or not(LV_FTL_VLD_SAVE)
  )
```

Copyright©Continental AG. Transmittal, reproduction, dissemination and/or editing of this document as well as utilisation of its contents and communication thereof to others without expressed authorisation are prohibited. Offenders will be held liable for payment of damages. All rights created by patent grant or registration of a utility model or design patent are reserved.

43.32 Fuel system pressure diagnosis

▶ Data Definition

Name	Mode	Coded Limits	Display Limits	Resolution	Unit
ERR_SYM_FUP_CH	V	0H 1H 2H 4H 8H	NO_SYM SYM_0 SYM_1 SYM_2 SYM_3	-	-
Detected symptom FUP_CH					
ERR_SYM_FUP_MFP_PLAUS	V	0H 1H 2H 4H 8H	NO_SYM SYM_0 SYM_1 SYM_2 SYM_3	-	-
Detected symptom FUP/MFP plausibility check					
ERR_SYM_FUP_ORNG	V	0H 1H 2H 4H 8H	NO_SYM SYM_0 SYM_1 SYM_2 SYM_3	-	-
Detected symptom FUP_ORNG check					
ERR_SYM_FUP_STST	V	0H 1H 2H 4H 8H	NO_SYM SYM_0 SYM_1 SYM_2 SYM_3	-	-
Detected symptom of the FUP stop-start diagnosis - FUP too low					
ERR_SYM_H_PRS_SYS	V	0H 1H 2H 4H 8H	NO_SYM SYM_0 SYM_1 SYM_2 SYM_3	-	-
Detected symptom for high pressure system monitoring					
FAC_LAM_DIF_MFP_PLAUS	V	8000... 7FFFH	-50... 49.99847412109	0.00152588	%
Deviation of fuel mass controller for MFP_PLAUS					
FAC_MFF_SP_HPDI	V	0... FFFFH	0 ...1	15.259e-6	-
HPDI split-up factor based on mass fuel flow setpoints for fuel pressure control and electrical fuel pump control					
FUP_DIAG_MMV	V	0... FFFFH	0... 347776	5.3067216	hPa
Mean value of fuel pressure for diagnosis					
FUP_SP_GRD_LIM_DIAG	V	0... FFFFH	0... 347776	5.3067216	hPa
Fuel pressure set point limited by feasible gradients					
FUP_STST_INI	O/V	0... FFFFH	0... 347776	5.3067216	hPa
Initial fuel pressure at beginning of FUP_STST diagnosis					
LF_CDN_DIAG_FUP_SYS	V	0... FFH	0... 255	1	-
Logical field used for individual configuration of activation conditions for high pressure fuel system diagnoses					
LV_CDN_DIAG_FUP_CH	V	0... 1H	0 ...1	1	-
Status of diagnosis for FUP monitoring during CH					
LV_CDN_DIAG_FUP_MFP_PLAUS	V	0... 1H	0 ...1	1	-

Copyright ©Continental AG. Transmittal, reproduction, dissemination and/or editing of this document as well as utilisation of its contents and communication thereof to others without expressed authorisation are prohibited. Offenders will be held liable for payment of damages. All rights created by patent grant or registration of a utility model or design patent are reserved.

Name	Mode	Coded Limits	Display Limits	Resolution	Unit
Status of diagnosis flag for FUP/MFP plausibility check					
LV_CDN_DIAG_FUP_MFP_PLAUS_0	V	0... 1H	0 ...1	1	-
Status of diagnosis flag for FUP/MFP plausibility check SYM_0					
LV_CDN_DIAG_FUP_MFP_PLAUS_1	V	0... 1H	0 ...1	1	-
Status of diagnosis flag for FUP/MFP plausibility check SYM 1					
LV_CDN_DIAG_FUP_ORNG	V	0... 1H	0 ...1	1	-
Status of diagnosis flag for FUP_ORNG check					
LV_CDN_DIAG_FUP_STST	V	0... 1H	0 ...1	1	-
Conditions fulfilled for detection of fault or fault-free state of FUP stop-start diagnosis - FUP too low					
LV_CDN_DIAG_FUP_SYS_CMN	V	0... 1H	0 ...1	1	-
Common activation condition for high pressure fuel system diagnoses					
LV_CDN_DIAG_FUP_SYS_CP	V	0... 1H	0 ...1	1	-
Activation condition for high pressure system diagnoses related to canister purge					
LV_CDN_DIAG_H_PRS_SYS	V	0... 1H	0 ...1	1	-
Status of diagnosis flag for high pressure system monitoring					
LV_CDN_DIAG_H_PRS_SYS_BOL_1_PRE	V	0... 1H	0 ...1	1	-
Activation condition for H_PRS_SYS_BOL_1 diagnosis - pump delivery too low					
LV_CDN_DIAG_H_PRS_SYS_BOL_2_PRE	V	0... 1H	0 ...1	1	-
Activation condition for H_PRS_SYS_BOL_2 diagnosis - pump delivery too low or over pressure valve defective					
LV_CDN_DIAG_H_PRS_SYS_TOL_1_PRE	V	0... 1H	0 ...1	1	-
Activation condition for H_PRS_SYS_TOL_1 diagnosis - pump delivery too high					
LV_CDN_DIAG_PRE_FUP_MFP_PLAUS	V	0... 1H	0 ...1	1	-
Pre activation condition for FUP_MFP_PLAUS diagnoses					
LV_CDN_DIAG_PRE_H_PRS_SYS	V	0... 1H	0 ...1	1	-
Pre activation condition for H_PRS_SYS diagnoses					
LV_ENA_DIAG_FUP_CH	V	0... 1H	0 ...1	1	-
Global condition for enabling FUP_CH diagnosis					
LV_ENA_DIAG_FUP_STST	V	0... 1H	0 ...1	1	-
Enabling of FUP stop-start diagnosis - FUP too low					
LV_END_DIAG_FUP_CH	V	0... 1H	0 ...1	1	-
End of diagnosis flag for FUP check during CH					
LV_END_DIAG_FUP_MFP_PLAUS	V	0... 1H	0 ...1	1	-
End of diagnosis flag for FUP/MFP plausibility check					
LV_END_DIAG_FUP_ORNG	V	0... 1H	0 ...1	1	-
End of diagnosis flag for FUP sensor ORNG check					
LV_END_DIAG_FUP_STST	V	0... 1H	0 ...1	1	-
End of diagnosis flag for FUP check during stop-start cycle					
LV_END_DIAG_H_PRS_SYS	V	0... 1H	0 ...1	1	-
End of diagnosis flag for high pressure system monitoring					
LV_ERR_FUP_CH	V	0... 1H	0 ...1	1	-
Boolean that indicates a deviation in fuel pressure during CH					
LV_ERR_FUP_MFP_PLAUS	V	0... 1H	0 ...1	1	-
Boolean that indicates inconsistencies between fuel pressure and mass fuel pump					
LV_ERR_FUP_ORNG	V	0... 1H	0 ...1	1	-
Boolean that indicates fuel pressure out of range					
LV_ERR_FUP_STST	V	0... 1H	0 ...1	1	-

Copyright ©Continental AG. Transmittal, reproduction, dissemination and/or editing of this document as well as utilisation of its contents and communication thereof to others without expressed authorisation are prohibited. Offenders will be held liable for payment of damages. All rights created by patent grant or registration of a utility model or design patent are reserved.

Name	Mode	Coded Limits	Display Limits	Resolution	Unit
Boolean that indicates a decrease in fuel pressure during stop-start cycle					
LV_ERR_H_PRS_SYS	V	0... 1H	0 ...1	1	-
Boolean that indicates abnormal fuel pressure value in fuel system					
LV_FAC_MFF_SP_HPDI	V	0... 1H	0 ...1	1	-
HPDI mode based on HPDI split-up factor					
LV_FIRST_VLD_TOOTH_OLD	V	0... 1H	0 ...1	1	-
First tooth detected after engine stop, old value					
LV_FUP_SP_GRD_LIM_DIAG	V	0... 1H	0 ...1	1	-
General activation condition of high pressure system diagnoses by feasible fuel pressure set point gradients					
LV_REC_DIAG_FUP_STST	V	0... 1H	0 ...1	1	-
Conditions fulfilled for ERRM recording of fault or fault-free state of FUP stop-start diagnosis - FUP too low					
LV_SYM_FUP_MFP_PLAUS_0	V	0... 1H	0 ...1	1	-
Symptom detected for FUP_MFP_PLAUS_H diagnosis - Fuel pressure sensor inappropriately high					
LV_SYM_FUP_MFP_PLAUS_1	V	0... 1H	0 ...1	1	-
Symptom detected for FUP_MFP_PLAUS_L diagnosis - Fuel pressure sensor inappropriately low					
LV_SYM_H_PRS_SYS_BOL_1_PRE	V	0... 1H	0 ...1	1	-
Symptom detected for H_PRS_SYS_BOL_1 diagnosis - pump delivery too low					
LV_SYM_H_PRS_SYS_BOL_2_PRE	V	0... 1H	0 ...1	1	-
Symptom detected for H_PRS_SYS_BOL_2 diagnosis - pump delivery too low or over pressure valve defective					
LV_SYM_H_PRS_SYS_TOL_1_PRE	V	0... 1H	0 ...1	1	-
Symptom detected for H_PRS_SYS_BOL_1 diagnosis - pump delivery too high					
LV_T_ON_DLY_FAC_MFF_SP_HPDI	V	0... 1H	0 ...1	1	-
Turn-on delayed HPDI mode					
T_DIAG_FUP_CH_ENA	V	0... FFH	0... 5.1	0.02	s
Delay timer for enabling FUP_CH diagnosis					
T_FUP_CH_DIAG_MAX	V	0... FFFFH	0... 1310.7	0.02	s
Timer indicating time with too high fuel pressure					
T_FUP_CH_DIAG_MIN	V	0... FFFFH	0... 1310.7	0.02	s
Timer indicating time with too low fuel pressure					
T_FUP_CH_DIAG_PASS_OK_MIN	V	0... FFFFH	0... 1310.7	0.02	s
minimum time that has to be expired until the diagnosis is allowed to end with no symptom detected					
T_FUP_STST	V	0... FFFFH	0... 655.35	0.01	s
Timer for maxium activation time of FUP stop-start diagnosis					
T_ON_DLY_FAC_MFF_SP_HPDI	V	0... FFFFH	0... 1310.7	0.02	s
Timer for turn-on delay of HPDI mode					

▶ Input Data

CL_MMV {p. 10342}	FAC_LAM_AD_LAM_OUT [NC_CBK_EX_NR] {p. 22680}	FAC_LAM_LIM [NC_CBK_EX_NR] {p. 2955}	FAC_MFF_ADD_LAM_AD_OUT [NC_CBK_EX_NR] {p. 22680}
FUEL_MASS_REQ_CTL {p. 11965}	FUP {p. 11886}	FUP_DIF {p. 11965}	FUP_H {p. 11815}
FUP_SP {p. 11952}	LF_TI_MIN [NC_NR_INJ_CMB] {p. 13218}	LV_ACT_DIAGCPS {p. 10639}	LV_CAT_PURGE_ACT [NC_CBK_EX_NR] {p. 6935}

Copyright ©Continental AG. Transmittal, reproduction, dissemination and/or editing of this document as well as utilisation of its contents and communication thereof to others without expressed authorisation are prohibited. Offenders will be held liable for payment of damages. All rights created by patent grant or registration of a utility model or design patent are reserved.

LV_CH {p. 10962}	LV_FIRST_VLD_TOOTH {p. 8042}	LV_FL {p. 25602}	LV_FUP_SP_EXT_REQ {p. 11962}
LV_IGK {p. 24082}	LV_INH_ERR_FUP_CH {p. 12216}	LV_INH_ERR_FUP_MFP_PLAUS {p. 12216}	LV_INH_ERR_FUP_ORNG {p. 12216}
LV_INH_ERR_FUP_STST {p. 12216}	LV_INH_ERR_H_PRS_SYS_BOL_1 {p. 12216}	LV_INH_ERR_H_PRS_SYS_BOL_2 {p. 12216}	LV_INH_ERR_H_PRS_SYS_TOL_1 {p. 12216}
LV_LAM_LSCL [NC_CBK_EX_NR] {p. 22406}	LV_LAM_STOP_AE {p. 11620}	LV_LAMB_OHP [NC_CBK_EX_NR] {p. 11033}	LV_ST_END {p. 7530}
LV_STST_STOP_CYC {p. 8458}	LV_WUP {p. 11441}	MFF_SP_EFP_CTL {p. 11463}	MFF_SP_FUP_CTL {p. 11463}
N_32 {p. 8079}	NC_CBK_EX_NR {p. 13927}	STATE_CP {p. 10215}	STATE_VCV {p. 11985}
T_AST {p. 8436}	TCO {p. 8846}	TFU_HPP {p. 11817}	

Calibration Data

Name	Mode	Coded Limits	Display Limits	Resolution	Unit
C_CL_MAX_DIAG_MFP_PLAUS	V	0... FFFFH	0... 1.999969482422	30.5176e-6	-
Maximum canister load to detect a fault in highpressure system					
C_CONF_FUP_MFP_DIAG_INH	V	0... FFH	0... 255	1	-
Configuration byte for FUP_MFP diagnosis					
C_CONF_H_PRS_SYS_BOL_1_DIAG_INH	V	0... FFH	0... 255	1	-
Configuration byte for H_PRS_SYS_BOL_1 diagnosis					
C_CONF_H_PRS_SYS_BOL_2_DIAG_INH	V	0... FFH	0... 255	1	-
Configuration byte for H_PRS_SYS_BOL_2 diagnosis					
C_CONF_H_PRS_SYS_TOL_1_DIAG_INH	V	0... FFH	0... 255	1	-
Configuration byte for H_PRS_SYS_TOL_1 diagnosis					
C_CRLC_FUP_DIAG_MMV	V	0... FFH	0... 0.99609375	0.00390625	-
Filterconstant for FUP_DIAG_MMV					
C_FAC_LAM_AD_MFP_PLAUS_0	V	8000... 7FFFH	-50... 49.99847412109	0.00152588	%
Limit of FAC Lambda contr. range for MFP_PLAUS SYM_0					
C_FAC_LAM_AD_MFP_PLAUS_1	V	8000... 7FFFH	-50... 49.99847412109	0.00152588	%
Limit of FAC Lambda contr. range for MFP_PLAUS SYM_1					
C_FAC_LAM_H_PRS_SYS_MAX_0	V	8000... 7FFFH	-50... 49.99847412109	0.00152588	%
Limit of Lambda contr. range for H_PRS_SYS SYM_0					
C_FAC_LAM_H_PRS_SYS_MAX_1	V	8000... 7FFFH	-50... 49.99847412109	0.00152588	%
Limit of Lambda contr. range for H_PRS_SYS SYM_1					
C_FAC_LAM_H_PRS_SYS_MAX_2	V	8000... 7FFFH	-50... 49.99847412109	0.00152588	%
Limit of Lambda contr. range for H_PRS_SYS SYM_2					

Copyright ©Continental AG. Transmittal, reproduction, dissemination and/or editing of this document as well as utilisation of its contents and communication thereof to others without expressed authorisation are prohibited. Offenders will be held liable for payment of damages. All rights created by patent grant or registration of a utility model or design patent are reserved.

Name	Mode	Coded Limits	Display Limits	Resolution	Unit
C_FAC_LAM_H_PRS_SYS_MIN_0	V	8000... 7FFFH	-50... 49.99847412109	0.00152588	%
Limit of Lambda contr. range for H_PRS_SYS SYM_0					
C_FAC_LAM_H_PRS_SYS_MIN_1	V	8000... 7FFFH	-50... 49.99847412109	0.00152588	%
Limit of Lambda contr. range for H_PRS_SYS SYM_1					
C_FAC_LAM_H_PRS_SYS_MIN_2	V	8000... 7FFFH	-50... 49.99847412109	0.00152588	%
Limit of Lambda contr. range for H_PRS_SYS SYM_2					
C_FAC_LAM_MFP_PLAUS_H_OBDS_BAS	V	8000... 7FFFH	-50... 49.99847412109	0.00152588	%
Base value of MFP_PLAUS_H					
C_FAC_LAM_MFP_PLAUS_H_OBDS_MAX	V	8000... 7FFFH	-50... 49.99847412109	0.00152588	%
Maximum error threshold value of MFP_PLAUS_H					
C_FAC_LAM_MFP_PLAUS_L_OBDS_BAS	V	8000... 7FFFH	-50... 49.99847412109	0.00152588	%
Base value of MFP_PLAUS_L					
C_FAC_LAM_MFP_PLAUS_L_OBDS_MIN	V	8000... 7FFFH	-50... 49.99847412109	0.00152588	%
Minimum error threshold value of MFP_PLAUS_L					
C_FAC_MIN_MFF_SP_HPDI	V	0... FFFFH	0 ...1	15.259e-6	-
Minimum HPDI split-up factor used to determine HPDI mode					
C_FUEL_REQ_CTL_DIAG_MAX_1	V	8000... 7FFFH	-694.510597391 ...694.4894026093	0.02119478	mg
Maximum threshold for highpressure controller SYM_1					
C_FUEL_REQ_CTL_DIAG_MAX_2	V	8000... 7FFFH	-694.510597391 ...694.4894026093	0.02119478	mg
Maximum threshold for highpressure controller SYM_2					
C_FUEL_REQ_CTL_DIAG_MIN_0	V	8000... 7FFFH	-694.510597391 ...694.4894026093	0.02119478	mg
Minimum threshold for highpressure controller SYM_0					
C_FUEL_REQ_CTL_MFP_DIAG_MAX	V	8000... 7FFFH	-694.510597391 ...694.4894026093	0.02119478	mg
Maximum threshold for highpressure controller					
C_FUEL_REQ_CTL_MFP_DIAG_MIN	V	8000... 7FFFH	-694.510597391 ...694.4894026093	0.02119478	mg
Minimum threshold for highpressure controller					
C_FUP_BOL_1	V	0... FFFFH	0... 347776	5.3067216	hPa
Bottom fuel pressure threshold 1					
C_FUP_DIF_BOL_1_OBDS_BAS	V	8000... 7FFFH	-173890 ...173884	5.30669108	hPa
Base value of H_PRS_SYS_BOL_1					
C_FUP_DIF_BOL_1_OBDS_MAX	V	8000... 7FFFH	-173890 ...173884	5.30669108	hPa
Maximum error threshold value of H_PRS_SYS_BOL_1					
C_FUP_DIF_CH_H_OBDS_BAS	V	8000... 7FFFH	-173890 ...173884	5.30669108	hPa
Base value of FUP_CH_H					
C_FUP_DIF_CH_H_OBDS_MAX	V	8000... 7FFFH	-173890 ...173884	5.30669108	hPa
Maximum error threshold value of FUP_CH_H					

Copyright ©Continental AG. Transmittal, reproduction, dissemination and/or editing of this document as well as utilisation of its contents and communication thereof to others without expressed authorisation are prohibited. Offenders will be held liable for payment of damages. All rights created by patent grant or registration of a utility model or design patent are reserved.

Name	Mode	Coded Limits	Display Limits	Resolution	Unit
C_FUP_DIF_CH_L_OBDS_BAS	V	8000... 7FFFH	-173890 ...173884	5.30669108	hPa
Base value of FUP_CH_L					
C_FUP_DIF_CH_L_OBDS_MIN	V	8000... 7FFFH	-173890 ...173884	5.30669108	hPa
Minimum error threshold value of FUP_CH_L					
C_FUP_DIF_DIAG_MAX	V	8000... 7FFFH	-173890 ...173884	5.30669108	hPa
Maximum threshold for FUP_DIF					
C_FUP_DIF_DIAG_MIN	V	8000... 7FFFH	-173890 ...173884	5.30669108	hPa
Minimum threshold for FUP_DIF					
C_FUP_DIF_MAX_H_PRS_SYS_1	V	8000... 7FFFH	-173890 ...173884	5.30669108	hPa
Maximum fuel pressure control deviation used for symptom detection of H_PRS_SYS_BOL_1 diagnosis					
C_FUP_DIF_MAX_H_PRS_SYS_2	V	8000... 7FFFH	-173890 ...173884	5.30669108	hPa
Maximum fuel pressure control deviation used for symptom detection of H_PRS_SYS_BOL_2 diagnosis					
C_FUP_DIF_MIN_H_PRS_SYS_0	V	8000... 7FFFH	-173890 ...173884	5.30669108	hPa
Minimum fuel pressure control deviation used for symptom detection of H_PRS_SYS_TOL_1 diagnosis					
C_FUP_DIF_TOL_1_OBDS_BAS	V	8000... 7FFFH	-173890 ...173884	5.30669108	hPa
Base value of H_PRS_SYS_TOL_1					
C_FUP_DIF_TOL_1_OBDS_MIN	V	8000... 7FFFH	-173890 ...173884	5.30669108	hPa
Minimum error threshold value of H_PRS_SYS_TOL_1					
C_FUP_H_PRS_SYS_1	V	0... FFFFH	0... 347776	5.3067216	hPa
Minimum fuel pressure to detect H_PRS_SYS_SYM 2					
C_FUP_H_PRS_SYS_2	V	0... FFFFH	0... 347776	5.3067216	hPa
Maximum fuel pressure to detect H_PRS_SYS_SYM 2					
C_FUP_H_PRS_SYS_TOL_2	V	0... FFFFH	0... 347776	5.3067216	hPa
Maximum fuel pressure to detect H_PRS_SYS_SYM 2					
C_FUP_SP_GRD_LIM_ABS_DIF_MAX	V	0... FFFFH	0... 347776	5.3067216	hPa
Maximum admissible deviation between raw and optimized fuel pressure set point to allow high pressure system diagnoses					
C_FUP_SP_NEG_GRD_LIM_DIAG	V	0... FFFFH	0... 347776	5.3067216	hPa
Limit of feasible negative fuel pressure set point gradients					
C_FUP_TOL_1	V	0... FFFFH	0... 347776	5.3067216	hPa
Top fuel pressure threshold 1					
C_FUP_TOL_2	V	0... FFFFH	0... 347776	5.3067216	hPa
Top fuel pressure threshold 2					
C_MFF_SP_FUP_CH_MIN	V	0... FFFFH	0... 1389	0.02119478	mg/stk
Minimum mass fuel flow for active FUP_CH diagnosis					
C_MFF_SP_FUP_MFP_PLAUS_MAX_0	V	0... FFFFH	0... 1389	0.02119478	mg/stk
Maximum Mass fuel flow for FUP_MFP_PLAUS diagnosis SYM_0					
C_MFF_SP_FUP_MFP_PLAUS_MAX_1	V	0... FFFFH	0... 1389	0.02119478	mg/stk
Maximum Mass fuel flow for FUP_MFP_PLAUS diagnosis SYM_1					
C_MFF_SP_FUP_MFP_PLAUS_MIN_0	V	0... FFFFH	0... 1389	0.02119478	mg/stk
Minimum Mass fuel flow for FUP_MFP_PLAUS diagnosis SYM_0					
C_MFF_SP_FUP_MFP_PLAUS_MIN_1	V	0... FFFFH	0... 1389	0.02119478	mg/stk
Minnimum Mass fuel flow for FUP_MFP_PLAUS diagnosis SYM_1					
C_MFF_SP_H_PRS_SYS_BOL_0	V	0... FFFFH	0... 1389	0.02119478	mg/stk
Bottom limit of MFF for detection of stucked VCV					
C_MFF_SP_H_PRS_SYS_MAX	V	0... FFFFH	0... 1389	0.02119478	mg/stk
Maximum Mass fuel flow for H_PRS_SYS diagnosis					

Copyright ©Continental AG. Transmittal, reproduction, dissemination and/or editing of this document as well as utilisation of its contents and communication thereof to others without expressed authorisation are prohibited. Offenders will be held liable for payment of damages. All rights created by patent grant or registration of a utility model or design patent are reserved.

Name	Mode	Coded Limits	Display Limits	Resolution	Unit
C_MFF_SP_H_PRS_SYS_MIN	V	0... FFFFH	0... 1389	0.02119478	mg/stk
Minnimum Mass fuel flow for H_PRS_SYS diagnosis					
C_MFF_SP_H_PRS_SYS_TOL_2	V	0... FFFFH	0... 1389	0.02119478	mg/stk
maximum fuel mass to detect H_PRS_SYS_SYM 2					
C_N_32_FUP_DIAG	V	0... FFH	0... 8160	32	rpm
Minimum engine speed for FUP/FPAPWM plausibility check (Default value 800)					
C_N_32_FUP_MFP_PLAUS_MAX_0	V	0... FFH	0... 8160	32	rpm
Maximum engine speed for the plausibility check SYM_0					
C_N_32_FUP_MFP_PLAUS_MAX_1	V	0... FFH	0... 8160	32	rpm
Maximum engine speed for the plausibility check SYM_1					
C_N_32_FUP_MFP_PLAUS_MIN_0	V	0... FFH	0... 8160	32	rpm
Minimum engine speed for the plausibility check SYM_0					
C_N_32_FUP_MFP_PLAUS_MIN_1	V	0... FFH	0... 8160	32	rpm
Minimum engine speed for the plausibility check SYM_1					
C_N_32_FUP_ORNG_MAX	V	0... FFH	0... 8160	32	rpm
Maximum engine speed for the FUP_ORNG check					
C_N_32_H_PRS_SYS_MAX	V	0... FFH	0... 8160	32	rpm
Maximum engine speed for H_PRS_SYS diagnosis					
C_N_32_H_PRS_SYS_MIN	V	0... FFH	0... 8160	32	rpm
Minimum engine speed for H_PRS_SYS diagnosis					
C_T_AST_MIN_FUP_CH	V	0... FFFFH	0... 6553.5	0.1	s
Min T_AST treshold for fuel pressure diagnosis during CH					
C_T_DIAG_FUP_CH_ENA_INI	V	0... FFH	0... 5.1	0.02	s
Initial timer value for FUP_CH diagnosis deactivation					
C_T_FUP_CH_DIAG_MAX	V	0... FFFFH	0... 1310.7	0.02	s
Timer threshold for pre-debouncing of FUP_CH diagnosis					
C_T_FUP_CH_DIAG_MIN	V	0... FFFFH	0... 1310.7	0.02	s
Timer threshold for pre-debouncing of FUP_CH diagnosis					
C_T_ON_DLY_FAC_MFF_SP_HPDI	V	0... FFFFH	0... 1310.7	0.02	s
Turn-on delay time of HPDI mode					
C_TCO_MIN_FUP_CH	V	0... FEH	-48... 142.5	0.75	°C
Min TCO threshold for fuel pressure diagnosis during CH					
ID_FUP_STST_MIN_DIAG	V	0... FFFFH	0... 347776	5.3067216	hPa
LDPM_TFU_HPP_FUP_STST_DIAG	4	0... FEH	-48... 142.5	0.75	°C
Minimum admissible fuel pressure at active FUP stop-start diagnosis dependend on fuel temperature					
ID_T_FUP_STST	V	0... FFFFH	0... 655.35	0.01	s
LDPM_TFU_HPP_FUP_STST_DIAG	4	0... FEH	-48... 142.5	0.75	°C
Time of active phase of FUP stop-start diagnosis dependend on fuel temperature					
LC_FUP_STST_DIAG_ENA	V	0... 1H	0 ...1	1	-
Switch to enable the FUP stop-start diagnosis					
LC_TI_MIN_H_PRS_SYS	V	0... 1H	0 ...1	1	-
TI_MIN is evaluated for symptom detection of H_PRS_SYS diagnoses, if set to 1					

Copyright ©Continental AG. Transmittal, reproduction, dissemination and/or editing of this document as well as utilisation of its contents and communication thereof to others without expressed authorisation are prohibited. Offenders will be held liable for payment of damages. All rights created by patent grant or registration of a utility model or design patent are reserved.

▶ Configuration Data

Name	Mode	Coded Limits	Display Limits	Resolution	Unit
NC_IDX_STD_FUP_CH_H	-	0... FFFFH	0... 65535	1	-
OBDS identifier for FUP_CH_H					
NC_IDX_STD_FUP_CH_L	-	0... FFFFH	0... 65535	1	-
OBDS identifier for FUP_CH_L					
NC_IDX_STD_FUP_MFP_PLAUS_H	-	0... FFFFH	0... 65535	1	-
OBDS identifier for FUP_MFP_PLAUS_H					
NC_IDX_STD_FUP_MFP_PLAUS_L	-	0... FFFFH	0... 65535	1	-
OBDS identifier for FUP_MFP_PLAUS_L					
NC_IDX_STD_H_PRS_SYS_BOL_1	-	0... FFFFH	0... 65535	1	-
OBDS identifier for H_PRS_SYS_BOL_1					
NC_IDX_STD_H_PRS_SYS_TOL_1	-	0... FFFFH	0... 65535	1	-
OBDS identifier for H_PRS_SYS_TOL_1					

▶ Import actions:

ACTION_ARSD_SetObds(**IN** <PRM_IDX_STD_OBDS>, **IN** <PRM_DATA_AV_OBDS>, **IN** <PRM_DATA_BAS_OBDS>, **IN** <PRM_ERR_THD_MIN_OBDS>, **IN** <PRM_ERR_THD_MAX_OBDS>)

ACTION_ERRM_FilterSymptom(**IN** <PRM_IDX_DIAG>, **IN** <PRM_LV_CDN_DIAG>, **IN** <PRM_ERR_SYM>, **IN** <PRM_ABC_INC>, **IN** <PRM_ABC_DEC>, **IN** <PRM_ABC_MAX>, **OUT** <PRM_LV_ERR>)

▶ General Information

This module contains the diagnosis for high pressure fuel system. The high pressure fuel system comprises of the high pressure pump (HDP), throttle, pressure relief valve (DBV) and high pressure sensor on the high pressure rail. The high pressure fuel system is responsible to deliver the fuel into the high pressure rail in order to maintain the required fuel pressure in the rail for the injections. The fuel pressure sensor in the rail serves as the feedback input for the close loop controller of the high pressure system. (The fuel pressure sensor acquisition from the sensor is done from another module). Fig. 1 below shows the high pressure and low pressure fuel system layout along with the low pressure rail, which is used in case Multi-point fuel injection (MPI) is also present.

The current fuel system high pressure diagnosis is performed for the high pressure system and when the DI (direct injection) mode is active and consists of,

1. Fuel pressure plausibility diagnosis
This diagnosis is performed to detect an implausibility error in the high pressure sensor by monitoring the fuel pressure controller and lambda controller behaviour against calibratable thresholds and comparing the two parameters.

2. High pressure system diagnosis
This diagnosis is performed to detect an error in the fuel pressure circuit by monitoring fuel pressure and fuel pressure deviation against calibratable thresholds. Two bottom limit and one top limit errors are defined in this diagnosis. The lambda controller behaviour could also be monitored in this diagnosis to cross check the proper functioning of the high pressure sensor.

3. Fuel pressure out of range diagnosis

Copyright ©Continental AG. Transmittal, reproduction, dissemination and/or editing of this document as well as utilisation of its contents and communication thereof to others without expressed authorisation are prohibited. Offenders will be held liable for payment of damages. All rights created by patent grant or registration of a utility model or design patent are reserved.

This diagnosis is performed to detect faults in components of the fuel high pressure circuit by monitoring the average fuel pressure against calibratable thresholds. Two top limits and a bottom limit are defined in this diagnosis.

4. Fuel pressure diagnosis during catalyst heating
This diagnosis is performed to monitor fuel pressure during catalyst heating. Fuel pressure too high or too low during catalyst heating can be detected through this diagnosis.

5. Fuel pressure diagnosis during start-stop cycle
This diagnosis is performed to monitor the loss of fuel pressure during an active engine stop triggered by the vehicle start-stop cycle. An error is raised in case of too low pressure to allow a normal engine start when requested.

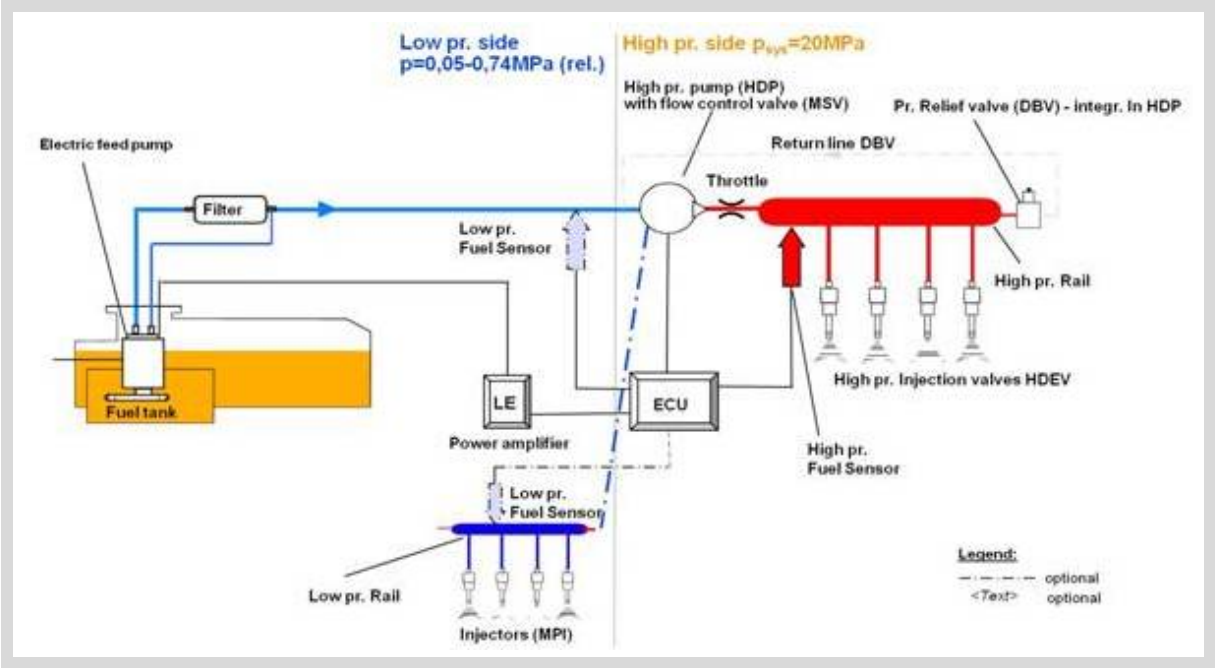

Figure 43.32.1: Low pressure and High pressure fuel system layout

Note : In addition, this module also contains interfaces for OBD radar functionality for fuel system pressure diagnosis.

The OBD radar functionality intends to collect diagnostic standard data values and to provide them to customer diagnostic tools for statistics purposes. This is basically used for tracking the deterioration of the quality of a component with time and as an indication to replace the component when necessary. The observed data (or quality parameter) is an indicator of the quality of the component on which the diagnosis is being done.

The main concept behind OBD radar functionality is to monitor the quality parameter relevant to the component being observed. A measure of number of times the observed data goes beyond a base calibrated threshold (C_XXX_BAS, PRM_DATA_BAS_OBDS in below Action) and above a maximum calibrated threshold (C_XXX_MAX, PRM_ERR_THD_MAX_OBDS in below Action) or below a minimum calibrated threshold (C_XXX_MIN, PRM_ERR_THD_MIN_OBDS in below Action) is recorded. The error detection is positive whenever the quality parameter breaches the minimum or maximum thresholds.

Copyright ©Continental AG. Transmittal, reproduction, dissemination and/or editing of this document as well as utilisation of its contents and communication thereof to others without expressed authorisation are prohibited. Offenders will be held liable for payment of damages. All rights created by patent grant or registration of a utility model or design patent are reserved.

The following Action is used as OBD radar interface,
The ACTION_ARSD_SetObds(IN <PRM_IDX_STD_OBDS>, IN <PRM_DATA_AV_OBDS>, IN <PRM_DATA_BAS_OBDS>, IN <PRM_ERR_THD_MIN_OBDS>, IN <PRM_ERR_THD_MAX_OBDS>). This action monitors the actual value of the observed data, against the base value and the thresholds. In addition, this action checks the diagnostic condition and an internal anti-bounce counter if an error index is to be set for the entry NC_IDX_STD_XXX for the particular diagnosis.

Both the maximum and minimum calibrated thresholds exist if the observed data can vary on both sides of the base value. If the observed data varies on only one side of the base value, then only one threshold is used.

For further information on OBD radar functionality, please refer to Customer statistical data module of ARSD functionality in the bluebook.

43.32.1 General activation condition of fuel system pressure diagnoses

▶ General Information

▶ Application Conditions

Initialisation:	*at reset* T_ON_DLY_FAC_MFF_SP_HPDI = C_T_ON_DLY_FAC_MFF_SP_HPDI FUP_SP_GRD_LIM_DIAG = FUP_SP
Activation:	Always
Deactivation:	Never
Recurrence:	20 ms

▶ Function Description

43.32.1.1 Activation by fuel pressure HPDI split-up factor

Since the high pressure plausibility and high pressure system diagnosis can only be performed during direct injection, it has to be ensured that the system is in High Pressure Direct Injection (HPDI) combustion mode prior to the start of diagnosis.

The HPDI mode determination is based on the ratio of fuel mass flow set points for the high pressure control (MFF_SP_FUP_CTL) and for the low pressure electrical fuel pump control (MFF_SP_EFP_CTL). If, this ratio exceeds a calibratable threshold for a defined calibrated time, then it is known that the HPDI mode is active, which is indicated by LV_T_ON_DLY_FAC_MFF_SP_HPDI in the calculation below.

```
IF(1)   MFF_SP_EFP_CTL > 0
THEN(1)
  FAC_MFF_SP_HPDI = (MFF_SP_FUP_CTL / max(MFF_SP_FUP_CTL, MFF_SP_EFP_CTL))
ELSE(1)
  FAC_MFF_SP_HPDI = 0
END(1)

LV_FAC_MFF_SP_HPDI = (FAC_MFF_SP_HPDI >= C_FAC_MIN_MFF_SP_HPDI)

IF(1) LV_FAC_MFF_SP_HPDI
THEN(1)
   IF(2)   T_ON_DLY_FAC_MFF_SP_HPDI > 0
   THEN(2)
      T_ON_DLY_FAC_MFF_SP_HPDI = T_ON_DLY_FAC_MFF_SP_HPDI - 0.02
   END(2)
ELSE(1)
   T_ON_DLY_FAC_MFF_SP_HPDI = C_T_ON_DLY_FAC_MFF_SP_HPDI
END(1)

LV_T_ON_DLY_FAC_MFF_SP_HPDI =
(T_ON_DLY_FAC_MFF_SP_HPDI == 0) AND  LV_FAC_MFF_SP_HPDI
```

Copyright ©Continental AG. Transmittal, reproduction, dissemination and/or editing of this document as well as utilisation of its contents and communication thereof to others without expressed authorisation are prohibited. Offenders will be held liable for payment of damages. All rights created by patent grant or registration of a utility model or design patent are reserved.

43.32.1.2 Activation by fuel pressure set point gradient

In case, that the high pressure fuel system has no ability to release the pressure actively, the fuel pressure may not be able to follow steep negative set point gradients. Thus the variable FUP_SP_GRD_LIM_DIAG calculates an optimized set point having feasible negative gradients. Once raw and optimized fuel pressure set point are close enough (i.e. C_FUP_SP_GRD_LIM_ABS_DIF_MAX), a general activation condition (LV_FUP_SP_GRD_LIM_DIAG) is set.

```
FUP_SP_GRD_LIM_DIAG =
  FUP_SP_GRD_LIM_DIAG + MAX( (FUP_SP - FUP_SP_GRD_LIM_DIAG)
                           , -C_FUP_SP_NEG_GRD_LIM_DIAG    )

LV_FUP_SP_GRD_LIM_DIAG =
  (  ABS(FUP_SP - FUP_SP_GRD_LIM_DIAG)
  <= C_FUP_SP_GRD_LIM_ABS_DIF_MAX     )
```

43.32.2 Fuel pressure plausibility diagnosis and High pressure system diagnosis

▶ General Information

The plausibility check for the high pressure sensor in the fuel pressure plausibility diagnosis is performed by comparing the mass fuel flow requested by the fuel pressure control and the corresponding lambda controller behaviour.

The high pressure system diagnosis is performed using the fuel pressure and fuel pressure deviation in order to deduce whether the pressure in the rail is too high or too low. The lambda controller behaviour can also be used as an input in this diagnosis in order to ensure that the high pressure sensor is working correctly during this diagnosis. This is done in order to discount the effect of a faulty high pressure sensor showing too high or too low pressure.

The Fuel pressure plausibility diagnosis and High pressure system diagnosis have common application conditions and a common pre-condition to perform the diagnoses.

▶ Application Conditions

Initialisation:	*at reset* All outputs to zero
Activation:	LV_IGK **AND** (N_32 > C_N_32_FUP_DIAG) **AND** not(LV_FUP_SP_EXT_REQ)
Deactivation:	if activation is not true
Recurrence:	20 ms

▶ Function Description

A common pre-condition for both the diagnoses is given below. It is to check if the engine start phase has been exited and if the flow control valve (VCV) is operational.

```
LV_CDN_DIAG_FUP_SYS_CMN =
(   LV_ST_END
AND   (   (STATE_VCV == MFP_MAX)
     OR   (STATE_VCV == MFP_CTL)
     OR  (STATE_VCV == VCV_OPEN))
AND   LV_FUP_SP_GRD_LIM_DIAG      )
```

Copyright ©Continental AG. Transmittal, reproduction, dissemination and/or editing of this document as well as utilisation of its contents and communication thereof to others without expressed authorisation are prohibited. Offenders will be held liable for payment of damages. All rights created by patent grant or registration of a utility model or design patent are reserved.

Since the lambda controller behaviour is used in the symptom calculations of both the Fuel pressure plausibility diagnosis and High pressure system diagnosis a common lambda factor is determined which represents the lambda controller behaviour.
The common lambda factor (FAC_LAM_DIF_MFP_PLAUS) depends on the lambda controller (FAC_LAM_LIM) and lambda adaptations (FAC_MFF_ADD_LAM_AD_OUT and FAC_LAM_AD_LAM_OUT).

FAC_LAM_LIM represents the lambda controller behaviour, it is the variation of lambda due to short term effects, for example change in fuelling.

The lambda adaptations indicate adaptation of lambda with time, i.e. to consider the long term effects over the life of the engine. The adaptations are considered for both the idle speed range and part load range.
FAC_MFF_ADD_LAM_AD_OUT represents the lambda adaptation in idle speed range. FAC_LAM_AD_LAM_OUT represents the lambda adaptation in part load range.

```
FAC_LAM_DIF_MFP_PLAUS =
(FAC_MFF_ADD_LAM_AD_OUT[NC_CBK_EX_NR]
+ FAC_LAM_AD_LAM_OUT[NC_CBK_EX_NR]
+ FAC_LAM_LIM[NC_CBK_EX_NR]) / NC_CBK_EX_NR
```

43.32.2.1 Fuel pressure plausibility diagnosis

The FUP/MFP (fuel high pressure / fuel mass) plausibility check is performed to detect if the high pressure sensor has an implausibility error. The implausibility is between the fuel mass requested and lambda state.

If the rail pressure sensor has a positive offset, i. e. it gives an inappropriately high value, two effects will be seen in the system,

1. The injected fuel mass will be too small since the sensor indicates a pressure higher than the actual physical pressure. As a result, the lambda will shift to lean phase due to low fuel in combustion. In order to compensate the resulting lean engine operation, the lambda controller will request more fuel, i.e. will become positive.
2. The pre-control of the pressure control algorithm assumes a higher pressure than actually present in the system. As a consequence it will request a higher fuel mass than needed, as it is trying to compensate a reduction of the pump efficiency factor due to higher pressures. The closed-loop part of the controller will compensate this excess fuel by becoming negative, i.e. will request less fuel.

Finally a significantly positive lambda control together with a significantly negative rail pressure control indicates a positive offset of the rail pressure sensor. Analogously a significantly negative lambda control together with a significantly positive rail pressure control indicates a negative offset of the rail pressure sensor.

This section describes the function for the fuel pressure plausibility diagnosis in detail. Firstly, the diagnostic condition is checked, subsequently, the symptom calculation is activated and based on filtering of the anti-bounce counter, the respective errors are recorded.

Check of diagnostic condition :

Since, the plausibility check of the high pressure fuel sensor is done against the lambda controller behaviour and lambda adaptation, the effect of canister purge should not be considered, since the activation of purging can affect the lambda behaviour. So, the diagnostic condition checks to ensure that the canister purge and its diagnosis are not active and canister load is below a calibrated threshold.

```
LV_CDN_DIAG_FUP_SYS_CP =
(not(LV_ACT_DIAGCPS) AND ((CL_MMV <= C_CL_MAX_DIAG_MFP_PLAUS) OR
(STATE_CP == CP_NOT_ACT) OR  (STATE_CP == NO_PURGE)))
```

Copyright ©Continental AG. Transmittal, reproduction, dissemination and/or editing of this document as well as utilisation of its contents and communication thereof to others without expressed authorisation are prohibited. Offenders will be held liable for payment of damages. All rights created by patent grant or registration of a utility model or design patent are reserved.

```
LF_CDN_DIAG_FUP_SYS = 0
SETBIT(0, LF_CDN_DIAG_FUP_SYS) = not(LV_WUP)          - Warm-up not active
SETBIT(1, LF_CDN_DIAG_FUP_SYS) = not(LV_CH)           - No catalyst heating
SETBIT(2, LF_CDN_DIAG_FUP_SYS) = not(LV_FL)           - No full load
SETBIT(3, LF_CDN_DIAG_FUP_SYS) = not(LV_LAM_STOP_AE) - No lambda controller stop
SETBIT(4, LF_CDN_DIAG_FUP_SYS) = not(LV_LAMB_OHP)     - No component protection
SETBIT(5, LF_CDN_DIAG_FUP_SYS) = not(LV_CAT_PURGE ACT)- No catalyst purge
SETBIT(6, LF_CDN_DIAG_FUP_SYS) = LV_LAM_LSCL - Active Closed loop Lambda control
SETBIT(7, LF_CDN_DIAG_FUP_SYS) = LV_CDN_DIAG_FUP_SYS_CP
```

Note :
For ease of calibration, an option is provided via the calibration constant C_CONF_FUP_MFP_DIAG_INH, where the several bit-wise conditions of LF_CDN_DIAG_FUP_SYS stated above can be set to active or inactive individually or together by giving appropriate value to the calibration.

For the below calculation of LV_CDN_DIAG_PRE_FUP_MFP_PLAUS, in the equation LF_CDN_DIAG_FUP_SYS **OR** C_CONF_FUP_MFP_DIAG_INH == 255, a bit-wise OR comparison is carried out between LF_CDN_DIAG_FUP_SYS and C_CONF_FUP_MFP_DIAG_INH and the physical value of the result is compared against 255.
If the physical value of the result is equal to 255, then the equation returns 1.
If the physical value of the result not equal to 255, then the equation returns 0.

As a consequence, the bits included in LF_CDN_DIAG_FUP_SYS,are only taken in to account, if the corresponding bit of C_CONF_FUP_MFP_DIAG_INH is calibrated with "0".

An example is described below,

Variable	Physical value	Bits	7	6	5	4	3	2	1	0
LF_CDN_DIAG_FUP_SYS	91		0	1	0	1	1	0	1	1
C_CONF_FUP_MFP_DIAG_INH	159		1	0	0	1	1	1	1	1
		OR								
	223		1	1	0	1	1	1	1	1

In the above case, since 223 ≠ 255, the equation is not satisfied and hence returns a zero.

Activation of all conditions can be done via C_CONF_FUP_MFP_DIAG_INH alone also, through setting its value to 255. 255 bit-wise is represented as 11111111 (all bits active).
1 - indicates that the bit is active, 0 - indicates that the bit is inactive.

```
LV_CDN_DIAG_PRE_FUP_MFP_PLAUS =
(not(LV_INH_ERR_FUP_MFP_PLAUS)
AND   LV_CDN_DIAG_FUP_SYS_CMN
AND   ((LF_CDN_DIAG_FUP_SYS OR  C_CONF_FUP_MFP_DIAG_INH) == 255)
AND   LV_T_ON_DLY_FAC_MFF_SP_HPDI)
```

The final diagnostic condition for plausibility diagnosis is split into two individual detection windows, where in dependency can be given via calibratable thresholds for the engine speed and fuel mass flow set point of the fuel pressure controller.
LV_CDN_DIAG_FUP_MFP_PLAUS_0 refers to the diagnosis for fuel pressure sensor giving too high value. LV_CDN_DIAG_FUP_MFP_PLAUS_1 refers to the diagnosis for fuel pressure sensor giving too low value.

```
LV_CDN_DIAG_FUP_MFP_PLAUS_0 =
```

Copyright ©Continental AG. Transmittal, reproduction, dissemination and/or editing of this document as well as utilisation of its contents and communication thereof to others without expressed authorisation are prohibited. Offenders will be held liable for payment of damages. All rights created by patent grant or registration of a utility model or design patent are reserved.

```
(LV_CDN_DIAG_PRE_FUP_MFP_PLAUS
AND (N_32 >= C_N_32_FUP_MFP_PLAUS_MIN_0)
AND  (N_32 <= C_N_32_FUP_MFP_PLAUS_MAX_0)
AND  (MFF_SP_FUP_CTL >= C_MFF_SP_FUP_MFP_PLAUS_MIN_0)
AND  (MFF_SP_FUP_CTL <= C_MFF_SP_FUP_MFP_PLAUS_MAX_0))

LV_CDN_DIAG_FUP_MFP_PLAUS_1 =
(LV_CDN_DIAG_PRE_FUP_MFP_PLAUS
AND  (N_32 >= C_N_32_FUP_MFP_PLAUS_MIN_1)
AND  (N_32 <= C_N_32_FUP_MFP_PLAUS_MAX_1)
AND  (MFF_SP_FUP_CTL >= C_MFF_SP_FUP_MFP_PLAUS_MIN_1)
AND  (MFF_SP_FUP_CTL <= C_MFF_SP_FUP_MFP_PLAUS_MAX_1))

LV_CDN_DIAG_FUP_MFP_PLAUS =
(LV_CDN_DIAG_FUP_MFP_PLAUS_0 OR  LV_CDN_DIAG_FUP_MFP_PLAUS_1)
```

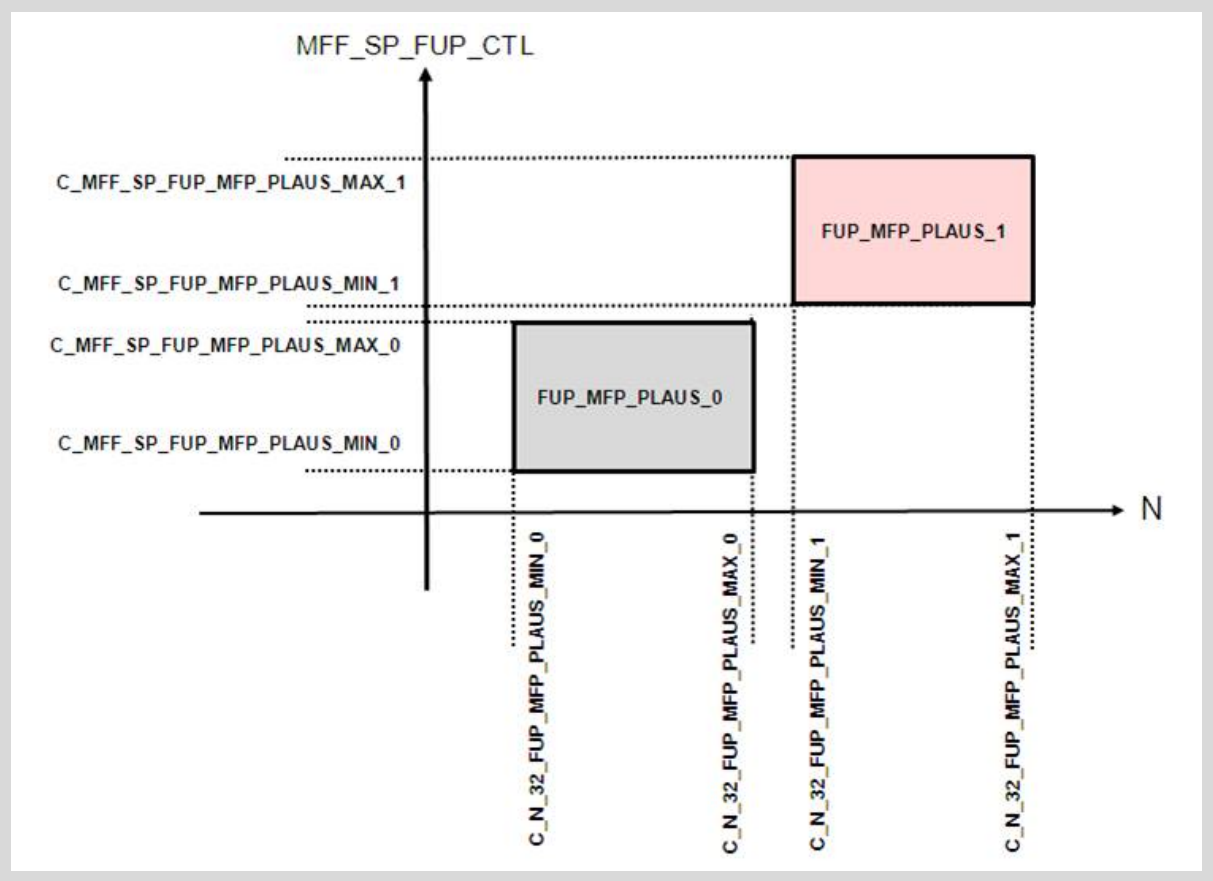

Figure 43.32.2: Detection window for diagnostic condition of fuel pressure plausibility diagnosis

Symptom calculation :

Fuel pressure sensor inappropriately high :

When the lambda control is positive, i.e. lambda control is demanding more fuel (greater than calibratable threshold of C_FAC_LAM_AD_MFP_PLAUS_O), but the fuel mass requested by the fuel pressure control in order to maintain the pressure in the rail is lower than the calibratable threshold (C_FUEL_REQ_CTL_MFP_DIAG_MIN), then it indicates that the pressure sensor is showing too high value.

```
LV_SYM_FUP_MFP_PLAUS_0 =
```

Copyright ©Continental AG. Transmittal, reproduction, dissemination and/or editing of this document as well as utilisation of its contents and communication thereof to others without expressed authorisation are prohibited. Offenders will be held liable for payment of damages. All rights created by patent grant or registration of a utility model or design patent are reserved.

```
AND   LV_CDN_DIAG_FUP_MFP_PLAUS_0
AND  (FAC_LAM_DIF_MFP_PLAUS > C_FAC_LAM_AD_MFP_PLAUS_0)
AND   (FUEL_MASS_REQ_CTL      < C_FUEL_REQ_CTL_MFP_DIAG_MIN)
AND   (LF_TI_MIN[0] == 0)
```

Fuel pressure sensor inappropriately low :

When the lambda control is negative, i.e. lambda control demanding less fuel (lesser than C_FAC_LAM_AD_MFP_PLAUS_1), but the fuel mass requested by the fuel pressure control in order to maintain the pressure in the rail is higher than the calibratable threshold (C_FUEL_REQ_CTL_MFP_DIAG_MAX), then it indicates that the pressure sensor is showing too low value.

```
LV_SYM_FUP_MFP_PLAUS_1 =
AND   LV_CDN_DIAG_FUP_MFP_PLAUS_1
AND  (FAC_LAM_DIF_MFP_PLAUS < C_FAC_LAM_AD_MFP_PLAUS_1)
AND   (FUEL_MASS_REQ_CTL      > C_FUEL_REQ_CTL_MFP_DIAG_MAX)

SETBIT(0, ERR_SYM_FUP_MFP_PLAUS) = LV_SYM_FUP_MFP_PLAUS_0
SETBIT(1, ERR_SYM_FUP_MFP_PLAUS) = LV_SYM_FUP_MFP_PLAUS_1
```

43.32.2.2 High pressure system diagnosis

The High pressure system diagnosis is used to detect an error in the fuel pressure circuit. The diagnosis is performed by monitoring the high pressure controller and fuel pressure deviation (FUP_DIF). Furthermore, to identify the error source (to separate the fuel pressure sensor from pump), the lambda controller can be monitored (i.e. to check whether lambda deviation is within limits).
There are two bottom limits defined and one top limit defined for comparison against the fuel pressure deviation.
Bottom limit 2 (BOL_2) indicates that the pump delivery is too low and with an accompanied pressure drop.
Bottom limit 1 (BOL_1) indicates that the pump delivery is too low.
Top limit 1 (TOL_1) indicates that the pump delivery is too high.
BOL_1 and BOL_2 failures decide whether DI (direct injection) is possible any longer or not.

This section describes the function for the high pressure system diagnosis in detail.
Firstly, the diagnostic condition is checked, subsequently, the symptom calculation is activated and based on filtering of the anti-bounce counter, the respective errors are recorded.

Check of diagnostic condition :

There is a common pre-condition for the bottom limit and top limit high pressure system diagnoses. This pre-condition has a detection window based on calibrated thresholds of engine speed and fuel mass flow set point of the fuel pressure controller.

```
LV_CDN_DIAG_PRE_H_PRS_SYS =
(LV_CDN_DIAG_FUP_SYS_CMN
AND  (N_32 >= C_N_32_H_PRS_SYS_MIN)
AND   (N_32 <= C_N_32_H_PRS_SYS_MAX)
AND   (MFF_SP_FUP_CTL >= C_MFF_SP_H_PRS_SYS_MIN)
AND   (MFF_SP_FUP_CTL <= C_MFF_SP_H_PRS_SYS_MAX))
```

Copyright ©Continental AG. Transmittal, reproduction, dissemination and/or editing of this document as well as utilisation of its contents and communication thereof to others without expressed authorisation are prohibited. Offenders will be held liable for payment of damages. All rights created by patent grant or registration of a utility model or design patent are reserved.

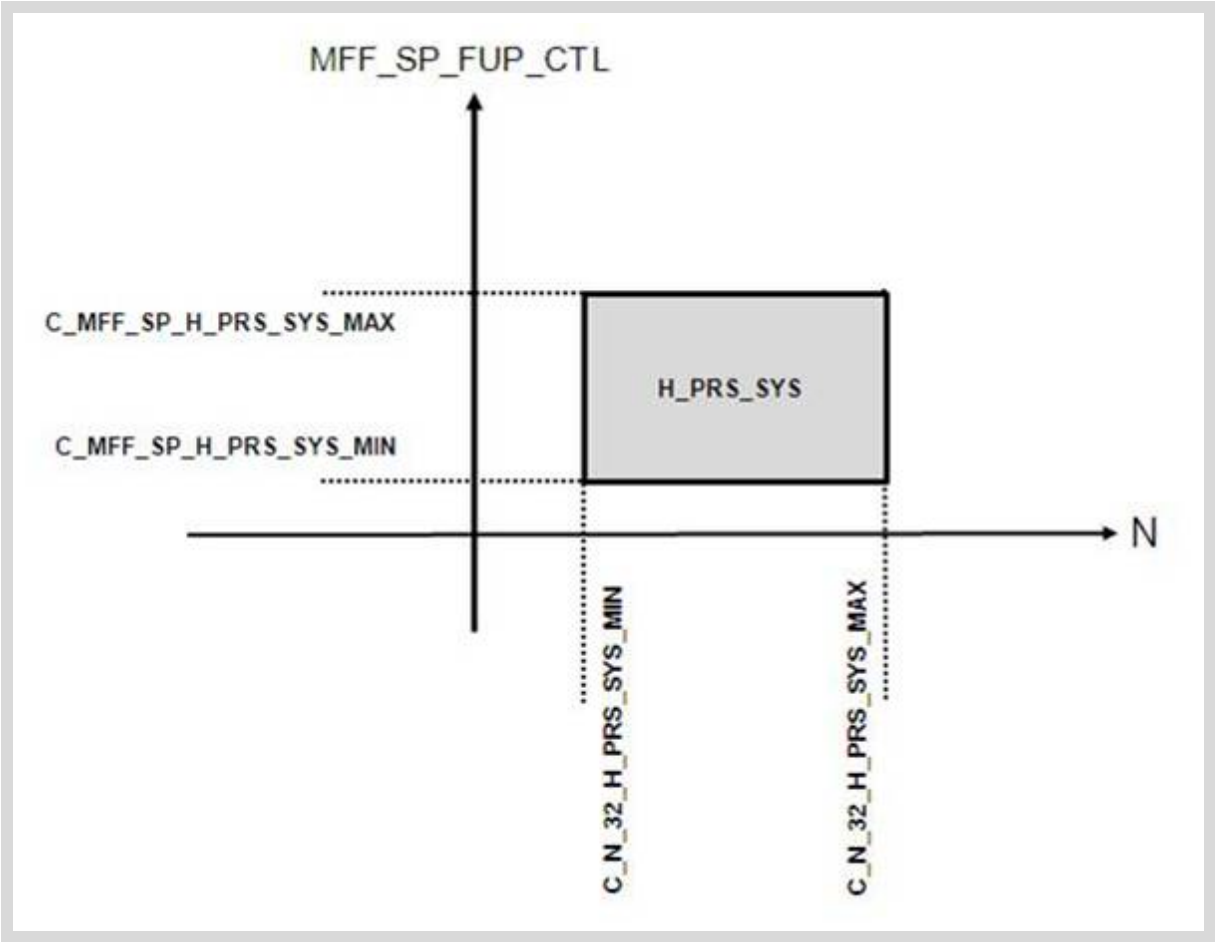

Figure 43.32.3: Detection window for diagnostic condition of high pressure system diagnosis

The conditions contained in LF_CDN_DIAG_FUP_SYS (described in previous section) again can be set to active or inactive individually or together through configuration bytes, C_CONF_H_PRS_SYS_BOL_1_DIAG_INH, C_CONF_H_PRS_SYS_BOL_2_DIAG_INH and C_CONF_H_PRS_SYS_TOL_1_DIAG_INH.

```
LV_CDN_DIAG_H_PRS_SYS_BOL_1_PRE =
(not(LV_INH_ERR_H_PRS_SYS_BOL_1)
AND   LV_CDN_DIAG_PRE_H_PRS_SYS
AND   ((LF_CDN_DIAG_FUP_SYS OR  C_CONF_H_PRS_SYS_BOL_1_DIAG_INH) == 255))

LV_CDN_DIAG_H_PRS_SYS_BOL_2_PRE =
(not(LV_INH_ERR_H_PRS_SYS_BOL_2)
AND   LV_CDN_DIAG_PRE_H_PRS_SYS
AND   ((LF_CDN_DIAG_FUP_SYS OR  C_CONF_H_PRS_SYS_BOL_2_DIAG_INH) == 255))

LV_CDN_DIAG_H_PRS_SYS_TOL_1_PRE =
(not(LV_INH_ERR_H_PRS_SYS_TOL_1)
AND   LV_CDN_DIAG_PRE_H_PRS_SYS
AND   ((LF_CDN_DIAG_FUP_SYS OR  C_CONF_H_PRS_SYS_TOL_1_DIAG_INH) == 255))
```

A common diagnostic condition check is done combining the checks for bottom and top limits.

```
LV_CDN_DIAG_H_PRS_SYS =
```

Copyright ©Continental AG. Transmittal, reproduction, dissemination and/or editing of this document as well as utilisation of its contents and communication thereof to others without expressed authorisation are prohibited. Offenders will be held liable for payment of damages. All rights created by patent grant or registration of a utility model or design patent are reserved.

```
(LV_CDN_DIAG_H_PRS_SYS_BOL_1_PRE OR  LV_CDN_DIAG_H_PRS_SYS_BOL_2_PRE OR  LV_
CDN_DIAG_H_PRS_SYS_TOL_1_PRE)
```

Symptom calculation :

For Bottom limit 2 :

BOL_2 symptom indicates that the pump delivery is too low and also there is a pressure drop below a critical limit. In order to identify that the high pressure pump is the source of the problem in the circuit, a cross check can be done to check if the high pressure sensor is working normally. This can be done via lambda factor monitoring through appropriate calibration, i.e., lambda factor is within limits, but the fuel pressure controller is requesting higher fuel mass.

```
LV_SYM_H_PRS_SYS_BOL_2_PRE =
(LV_CDN_DIAG_H_PRS_SYS_BOL_2_PRE
AND (FUP_DIF                      >  C_FUP_DIF_MAX_H_PRS_SYS_2)
AND  (FUP                          <  C_FUP_H_PRS_SYS_2)
AND (
    ((FUEL_MASS_REQ_CTL           >  C_FUEL_REQ_CTL_DIAG_MAX_2)
     AND  (FAC_LAM_DIF_MFP_PLAUS >= C_FAC_LAM_H_PRS_SYS_MIN_2)
     AND  (FAC_LAM_DIF_MFP_PLAUS <= C_FAC_LAM_H_PRS_SYS_MAX_2))
     OR  ((STATE_VCV              == MFP_MAX)
     AND  (MFF_SP_FUP_CTL          <  C_MFF_SP_H_PRS_SYS_TOL_2)
     AND  (FUP                     <  C_FUP_H_PRS_SYS_TOL_2))
     )
 )
```

Direct injection is no longer possible if there is a BOL_2 error.

For Bottom limit 1 :

BOL_1 symptom indicates that the pump delivery is too low, but there is no critical pressure drop in the system. Similar to BOL_2, here also, the cross check of the high pressure sensor can be done through lambda factor monitoring by appropriate calibration.

```
LV_SYM_H_PRS_SYS_BOL_1_PRE =
(LV_CDN_DIAG_H_PRS_SYS_BOL_1_PRE
AND (FUP_DIF                  >  C_FUP_DIF_MAX_H_PRS_SYS_1)
AND  (FUP                      >= C_FUP_H_PRS_SYS_1)
AND (FUEL_MASS_REQ_CTL        >  C_FUEL_REQ_CTL_DIAG_MAX_1)
AND  (FAC_LAM_DIF_MFP_PLAUS >= C_FAC_LAM_H_PRS_SYS_MIN_1)
AND  (FAC_LAM_DIF_MFP_PLAUS <= C_FAC_LAM_H_PRS_SYS_MAX_1))
```

In this case, direct injection is still possible.

For Top limit :

TOL_1 indicates that the pump delivery is too high, i.e. the actual fuel pressure is higher than the set point and the fuel mass delivered by the pump is significantly reduced by the closed loop controller, or even set to zero in an open loop mode. The diagnosis can be disabled in case the injection time reaches its minimum limit.
In order to cross check if the high pressure sensor is working normally, the lambda factor monitoring can be done by appropriate calibration, i.e. lambda factor is within limits and the fuel pressure controller is requesting lower fuel mass.

```
LV_SYM_H_PRS_SYS_TOL_1_PRE =
(LV_CDN_DIAG_H_PRS_SYS_TOL_1_PRE
 AND (FUP_DIF < C_FUP_DIF_MIN_H_PRS_SYS_0)
 AND  ((LF_TI_MIN[0] == 0 ) OR (LC_TI_MIN_H_PRS_SYS  == 0))
 AND  (FAC_LAM_DIF_MFP_PLAUS >= C_FAC_LAM_H_PRS_SYS_MIN_0)
 AND  (FAC_LAM_DIF_MFP_PLAUS <= C_FAC_LAM_H_PRS_SYS_MAX_0)
```

Copyright ©Continental AG. Transmittal, reproduction, dissemination and/or editing of this document as well as utilisation of its contents and communication thereof to others without expressed authorisation are prohibited. Offenders will be held liable for payment of damages. All rights created by patent grant or registration of a utility model or design patent are reserved.

```
 AND ((FUEL_MASS_REQ_CTL     <  C_FUEL_REQ_CTL_DIAG_MIN_0)
     OR ((STATE_VCV == OPEN) AND  (MFF_SP_FUP_CTL > C_MFF_SP_H_PRS_SYS_BOL_0)))
 )

SETBIT(0, ERR_SYM_H_PRS_SYS) = LV_SYM_H_PRS_SYS_TOL_1_PRE
SETBIT(1, ERR_SYM_H_PRS_SYS) = LV_SYM_H_PRS_SYS_BOL_1_PRE
SETBIT(2, ERR_SYM_H_PRS_SYS) = LV_SYM_H_PRS_SYS_BOL_2_PRE
```

Copyright ©Continental AG. Transmittal, reproduction, dissemination and/or editing of this document as well as utilisation of its contents and communication thereof to others without expressed authorisation are prohibited. Offenders will be held liable for payment of damages. All rights created by patent grant or registration of a utility model or design patent are reserved.

43.32.2.3 Diagnostic and OBD radar status update for Fuel pressure plausibility diagnosis and High pressure system diagnosis

ERRM interfaces :

The ACTION_ERRM_Filtersymptom_(NC_IDX_ERR_XXX, LV_CDN_DIAG_XXX, ERR_SYM_XXX, C_ABC_INC_XXX, (dec), C_ABC_MAX_XXX, LV_ERR_XXX) is the interface provided by Error Management (ERRM) to the module for providing the diagnostics results to ERRM.

FUP_MFP plausibility diagnosis :

```
ACTION_ERRM_FilterSymptom
(NC_IDX_DIAG_FUP_MFP_PLAUS, LV_CDN_DIAG_FUP_MFP_PLAUS, ERR_SYM_FUP_MFP_PLAUS, C_
ABC_INC_FUP_MFP_PLAUS, 1, C_ABC_MAX_FUP_MFP_PLAUS, LV_ERR_FUP_MFP_PLAUS)
```

H_PR_SYS diagnosis :

```
ACTION_ERRM_FilterSymptom
(NC_IDX_DIAG_H_PRS_SYS, LV_CDN_DIAG_H_PRS_SYS, ERR_SYM_H_PRS_SYS, C_ABC_INC_
H_PRS_SYS, 1, C_ABC_MAX_H_PRS_SYS, LV_ERR_H_PRS_SYS)
```

OBD radar interfaces :

The OBD radar monitoring is always triggered by a pre-condition. Pre-condition active means that there is a possibility of the quality parameter breaching the error detection thresholds, so, the monitoring of it is triggered as soon as the pre-condition is active.
The pre-condition could also be the diagnostic condition, symptom condition etc. of the respective diagnosis itself.

<u>FUP_MFP plausibility diagnosis :</u>

The OBD radar is done for both the plausibility diagnoses (too high or too low) of the fuel high pressure sensor, since both the diagnoses reflect the quality of sensor. As explained in the diagnosis, the shift in lambda behaviour (towards rich or towards lean) is due to the deviation shown by the high pressure sensor. So, it is appropriate to consider the common lambda factor (FAC_LAM_DIF_MFP_PLAUS) as the quality parameter for the OBD radar monitoring of the high pressure sensor.

Fuel pressure sensor inappropriately high diagnosis :
For this particular diagnosis, the pre-condition is when the mass fuel flow requested by the fuel pressure control is lower than the threshold calibrated in the respective diagnosis and no minimum injection is detected, then the OBD radar for monitoring of the lambda factor is active.

So, when ever the pre-condition is active, the number of instances when common lambda factor exceeds the calibrated maximum value (error threshold) is recorded in ARSD functionality. Under normal conditions, the common lambda factor should be in between the calibrated base value and calibrated maximum value.

```
IF(1) LV_CDN_DIAG_FUP_MFP_PLAUS_0
THEN(1)
  IF(2)  ( (FUEL_MASS_REQ_CTL     < C_FUEL_REQ_CTL_MFP_DIAG_MIN)
```

```
            AND    (LF_TI_MIN[0] == 0) )
  THEN(2)
          ACTION_ARSD_SetOBDS
          (NC_IDX_STD_FUP_MFP_PLAUS_H,
           FAC_LAM_DIF_MFP_PLAUS,
           C_FAC_LAM_MFP_PLAUS_H_OBDS_BAS,
           0x80000000,
           C_FAC_LAM_MFP_PLAUS_H_OBDS_MAX)
  END(2)
END(1)
```

Fuel pressure sensor inappropriately low diagnosis :
This is analogous to the above description of fuel pressure sensor inappropriately high diagnosis, but using the respective calibrated thresholds for the Fuel pressure sensor inappropriately low diagnosis.

```
IF(1) LV_CDN_DIAG_FUP_MFP_PLAUS_1
THEN(1)
  IF(2)      (FUEL_MASS_REQ_CTL      > C_FUEL_REQ_CTL_MFP_DIAG_MAX)
  THEN(2)
            ACTION_ARSD_SetOBDS
           (NC_IDX_STD_FUP_MFP_PLAUS_L,
            FAC_LAM_DIF_MFP_PLAUS,
            C_FAC_LAM_MFP_PLAUS_L_OBDS_BAS,
            C_FAC_LAM_MFP_PLAUS_L_OBDS_MIN,
            0x80000000)
  END(2)
END(1)
```

H_PR_SYS diagnosis :

The high pressure system diagnosis reflects the quality of the high pressure pump delivery. So, the OBD radar monitoring of the high pressure system diagnosis is done.

The high pressure system diagnosis consists of two bottom limits (BOL_1 and BOL_2) and one top limit (TOL_1) diagnoses. However, the OBD radar is done for BOL_1 and TOL_1 diagnoses only, since the threshold limit for BOL_1 diagnosis is lower than that of BOL_2. Since, fuel pressure can be attributed to the characteristics of pump delivery, the quality parameter for this diagnoses is the fuel pressure deviation (FUP_DIF).

BOL_1 diagnosis :
For this particular diagnosis, the pre-condition is the symptom calculation of the BOL_1 diagnosis itself. So, when the symptom calculation conditions are fulfilled, then the OBD radar for monitoring of the fuel pressure deviation is active.

So, when ever the pre-condition is active, the number of instances when fuel pressure deviation exceeds the calibrated maximum value (error threshold) is recorded in ARSD functionality. Under normal conditions, the fuel pressure deviation should be in between the calibrated base value and calibrated maximum value.

```
IF(1) LV_CDN_DIAG_H_PRS_SYS_BOL_1_PRE
THEN(1)
       IF(2)   ( (FUP                    >= C_FUP_H_PRS_SYS_1         )
                AND (FUEL_MASS_REQ_CTL      >  C_FUEL_REQ_CTL_DIAG_MAX_1)
                AND (FAC_LAM_DIF_MFP_PLAUS >= C_FAC_LAM_H_PRS_SYS_MIN_1)
                AND (FAC_LAM_DIF_MFP_PLAUS <= C_FAC_LAM_H_PRS_SYS_MAX_1) )
       THEN(2)
                ACTION_ARSD_SetOBDS
               (NC_IDX_STD_H_PRS_SYS_BOL_1,
                FUP_DIF,
                C_FUP_DIF_BOL_1_OBDS_BAS,
```

Copyright ©Continental AG. Transmittal, reproduction, dissemination and/or editing of this document as well as utilisation of its contents and communication thereof to others without expressed authorisation are prohibited. Offenders will be held liable for payment of damages. All rights created by patent grant or registration of a utility model or design patent are reserved.

```
                0x80000000,
                C_FUP_DIF_BOL_1_OBDS_MAX)
        END(2)
END(1)
```

TOL_1 diagnosis :
For this particular diagnosis, the pre-condition is the symptom calculation of the TOL_1 diagnosis itself.
This is analogous to the above description of BOL_1 diagnosis, but using the respective calibrated thresholds for the TOL_1 diagnosis.

```
IF(1) LV_CDN_DIAG_H_PRS_SYS_TOL_1_PRE
THEN(1)
        IF(2) (
              ((LF_TI_MIN[0] == 0) OR (LC_TI_MIN_H_PRS_SYS == 0 ))
               AND  (FAC_LAM_DIF_MFP_PLAUS >= C_FAC_LAM_H_PRS_SYS_MIN_0)
               AND (FAC_LAM_DIF_MFP_PLAUS <= C_FAC_LAM_H_PRS_SYS_MAX_0)
               AND ((FUEL_MASS_REQ_CTL   <  C_FUEL_REQ_CTL_DIAG_MIN_0)
                     OR ((STATE_VCV       == OPEN) AND
                          (  MFF_SP_FUP_CTL   >  C_MFF_SP_H_PRS_SYS_BOL_0 )))
              )
        THEN(2)
                ACTION_ARSD_SetOBDS
                (NC_IDX_STD_H_PRS_SYS_TOL_1,
                FUP_DIF,
                C_FUP_DIF_TOL_1_OBDS_BAS,
                C_FUP_DIF_TOL_1_OBDS_MIN,
                0x80000000)
        END(2)
END(1)
```

43.32.3 FUP out of range diagnosis

▶ General Information

This section describes the fuel pressure out of range diagnosis in detail. This diagnosis is used to detect mechanical faults of the components of the fuel high pressure circuit. There are two pressure limits to detect overpressure and there is one limit to detect very low pressure.

FUP greater than TOL_2 indicates an overpressure and thus, indicating a faulty pressure relief valve. The calibrated limit of TOL_2 is set higher than the pressure at which the relief valve should open.

Usage of the TOL_1 limit for diagnosis depends on the project system configuration.
For example,
1. TOL_1 limit could be used to detect a faulty regulator (stuck), OR,
2. TOL_1 limit could be used to detect if fuel pressure greater than max. possible injector opening pressure, OR,
3. TOL_1 limit could be used to detect a faulty pressure relief valve (in this case TOL_2 diagnosis could be used for a different purpose).
The calibration limit of fuel pressure for TOL_1 diagnosis is always calibrated lesser compared to that of TOL_2 diagnosis.

FUP lesser than calibrated BOL_1 indicates an excessive loss of pressure (pressure is below certain level, for example, pressure below fuel low pressure value). In this case, a mechanical failure in the pump, regulator or leakage in the rail can be detected depending on the project system configuration.

Copyright ©Continental AG. Transmittal, reproduction, dissemination and/or editing of this document as well as utilisation of its contents and communication thereof to others without expressed authorisation are prohibited. Offenders will be held liable for payment of damages. All rights created by patent grant or registration of a utility model or design patent are reserved.

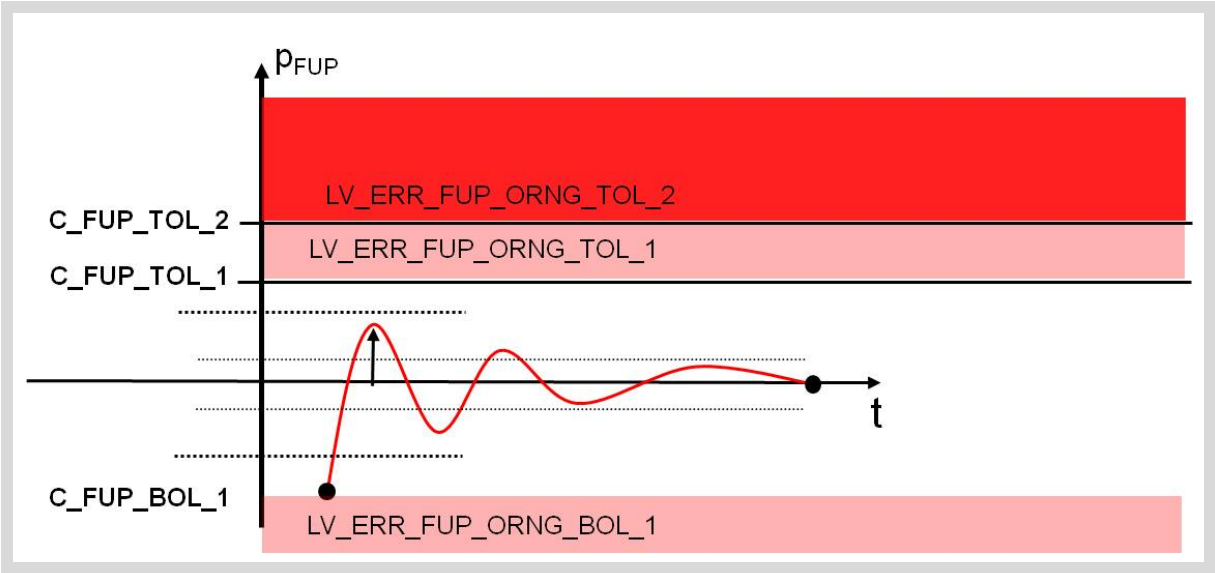

Figure 43.32.4: Representation of fuel pressure out of range diagnosis

▶ Application Conditions

Initialisation:

```
at reset
All outputs to zero
```

Activation:

```
LV_IGK AND (N_32 > C_N_32_FUP_DIAG) AND not(LV_FUP_SP_EXT_
REQ)
```

Deactivation:

```
if activation is not true
FUP_DIAG_MMV = FUP_H
```

Recurrence:

```
20 ms
```

▶ Function Description

Check of diagnostic condition :

The diagnostic condition for the fuel pressure out of range diagnosis checks if the system has exited engine start phase and if the engine speed is within a calibratable limit. Also, the diagnosis is inhibited in case of specific conditions. The inhibition calculation is defined in the Appl. Inc. module of the fuel system pressure diagnosis.

```
LV_CDN_DIAG_FUP_ORNG =
(LV_ST_END AND not(LV_INH_ERR_FUP_ORNG) AND (N_32 < C_N_32_FUP_ORNG_MAX))
```

For the symptom calculation, in order to compensate sudden variations of fuel pressure, a moving mean value of fuel pressure is calculated (similar to a Digital low pass filter). This mean value is used for comparison against the calibratable bottom and top limits.

```
IF(1) not(LV_CDN_DIAG_FUP_ORNG)
THEN(1)
  FUP_DIAG_MMV = FUP
ELSE(1)
  IF(2) LV_CDN_DIAG_FUP_ORNG
```

Copyright©Continental AG. Transmittal, reproduction, dissemination and/or editing of this document as well as utilisation of its contents and communication thereof to others without expressed authorisation are prohibited. Offenders will be held liable for payment of damages. All rights created by patent grant or registration of a utility model or design patent are reserved.

```
  THEN(2)
    FUP_DIAG_MMV = FUP_DIAG_MMV + (C_CRLC_FUP_DIAG_MMV * (FUP - FUP_DIAG_MMV))
  END(2)
END(1)
```

Symptom calculation and Error detection :
The symptoms are detected according to the following logic,

If Mean Fuel pressure exceeds Top limit 2, **then** set symptom SYM_1/FUP out of range error,
Elseif Mean Fuel pressure exceeds Top limit 1, **then** set symptom SYM_0/FUP out of range error,
Elseif Mean Fuel pressure falls below Bottom limit 1, **then** set symptom SYM_2/FUP out of range error,
Elseif Set symptom NO_SYM/Reset FUP out of range error,
Endif

Details of the symptom calculation and error detection is given below. The debouncing is done internally in the software.

```
IF(1)  LV_CDN_DIAG_FUP_ORNG
THEN(1)
  Check for Top limit 2 error :
  IF(2)  (FUP_DIAG_MMV > C_FUP_TOL_2)
  THEN(2)
    Symptom "FUP top limit 2 reached" is active :
    ERR_SYM_FUP_ORNG = SYM_1
    After debounce :
    LV_ERR_FUP_ORNG = 1
  ELSE(2)
        Check of Top limit 1 error :
    IF(3)  (FUP_DIAG_MMV > C_FUP_TOL_1)
    THEN(3)
            Symptom "FUP top limit 1 reached" is active :
      ERR_SYM_FUP_ORNG = SYM_0
            After debounce :
      LV_ERR_FUP_ORNG = 1
    ELSE(3)
              Check of Bottom limit 1 error :
      IF(4)  (FUP_DIAG_MMV < C_FUP_BOL_1)
      THEN(4)
                      Symptom "FUP bottom limit 1 reached" is active :
        ERR_SYM_FUP_ORNG = SYM_2
                      After debounce :
        LV_ERR_FUP_ORNG = 1
      ELSE(4)
                No symtom is active :
      ERR_SYM_FUP_ORNG = NO_SYM
                After debounce :
      LV_ERR_FUP_ORNG = 0
      END(4)
    END(3)
  END(2)
END(1)
```

Copyright ©Continental AG. Transmittal, reproduction, dissemination and/or editing of this document as well as utilisation of its contents and communication thereof to others without expressed authorisation are prohibited. Offenders will be held liable for payment of damages. All rights created by patent grant or registration of a utility model or design patent are reserved.

43.32.4 FUP diagnosis during catalyst heating (LV_ERR_FUP_CH)

▶ General Information

This section describes the FUP diagnosis during catalyst heating in detail.

Monitoring of the fuel pressure needs to be done during catalyst heating in order to ensure the optimal injection pressures for heating the calatyst. If the fuel injection pressure is not optimal, then proper catalyst heating (heating within the required time to achieve the optimal working temperature range of the catalyst) will not be possible.
In this diagnosis, the fuel pressure deviation, i.e. the difference between the fuel pressure setpoint and actual fuel pressure is the observed parameter.
If during catalyst heating, the fuel pressure deviation stays below or above a defined calibrated threshold for a definite calibrated time, then the corresponding symptoms are set and after debounce, the respective error is set.
There are individual thresholds, symptoms and errors for fuel pressure too low and fuel pressure too high diagnosis.

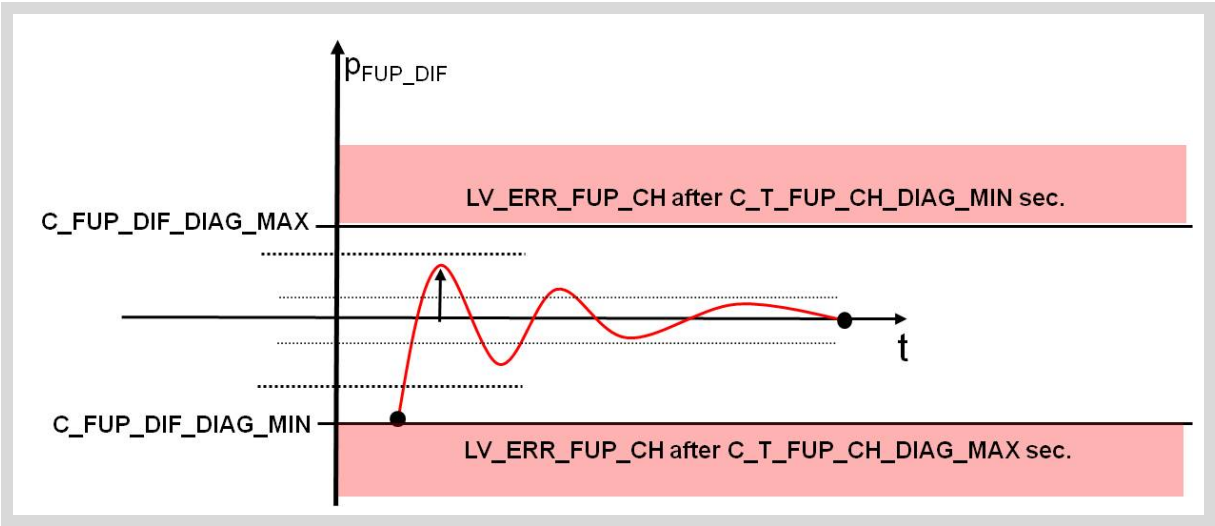

Figure 43.32.5: Representation of FUP diagnosis during catalyst heating

▶ Application Conditions

Initialisation:

```
at reset and LV_IGK = 0 - -> 1 (OFF2ON)
T_FUP_CH_DIAG_MIN = 0 ms
T_FUP_CH_DIAG_MAX = 0 ms
T_FUP_CH_DIAG_PASS_OK_MIN = 0 ms
T_DIAG_FUP_CH_ENA = 0 s
```

Activation: `LV_IGK AND (N_32 > C_N_32_FUP_DIAG) AND not(LV_FUP_SP_EXT_REQ)`

Deactivation: `if activation is not true`

Recurrence: `20 ms`

▶ Function Description

Enabling of diagnosis :
The diagnosis is enabled only if,

Copyright ©Continental AG. Transmittal, reproduction, dissemination and/or editing of this document as well as utilisation of its contents and communication thereof to others without expressed authorisation are prohibited. Offenders will be held liable for payment of damages. All rights created by patent grant or registration of a utility model or design patent are reserved.

1. The high pressure fuel mass flow requested from the fuel pressure control is above a calibrated limit for a defined calibrated time, and,
2. The coolant temperature and after start time are above the defined calibratable thresholds. This is to ensure that the system is in the catalyst heating range.
3. There is no inhibition of the diagnosis.

```
IF(1)   MFF_SP_FUP_CTL < C_MFF_SP_FUP_CH_MIN
THEN(1)
  T_DIAG_FUP_CH_ENA = C_T_DIAG_FUP_CH_ENA_INI
ELSE(1)
  T_DIAG_FUP_CH_ENA = T_DIAG_FUP_CH_ENA - 0.02s
END(1)

LV_ENA_DIAG_FUP_CH =
  not(LV_INH_ERR_FUP_CH)
  AND   LV_CH
  AND   (TCO > C_TCO_MIN_FUP_CH)
  AND   (T_AST > C_T_AST_MIN_FUP_CH)
  AND   (T_DIAG_FUP_CH_ENA == 0)
```

Check of diagnostic condition, Symptom calculation and Error detection :

During catalyst heating, the deviation between the fuel pressure setpoint to actual fuel pressure (FUP_DIF) is observed. If this deviation is within limit and the NO symptom timer (T_FUP_CH_DIAG_PASS_OK_MIN) has expired beyond C_T_FUP_CH_DIAG_MAX or C_T_FUP_CH_DIAG_MIN, then it indicates that the fuel pressure is in the normal range and NO_SYM status is sent to ERRM and the anti-bounce counter is decremented once.
Symptoms are set and are followed by the increment of the anti-bounce counter accordingly, if the FUP_DIF is above or below the thresholds for the respective durations.
During active diagnosis, if the deviation stays within limits, but the timers (T_FUP_CH_DIAG_MAX, T_FUP_CH_DIAG_MIN) have a non-zero value (due to deviation in earlier recurrences), then the diagnostic condition fails.
All timers are reset if the diagnosis is not enabled.

The symptoms are detected according to the following logic,

If Diagnosis is enabled,
Then
  Increment NO_SYM timer,
  If Fuel pressure is too low, **then** increment Min. timer,
  If Fuel pressure is too high, **then** increment Max. timer,
  If Max. timer exceeds limit, **then** set symptom SYM_0/FUP_CH error,
  Elseif Min. timer exceeds limit, **then** set symptom SYM_1/FUP_CH error,
  Elseif Min. timer == Max. timer == 0 and NO_SYM timer exceeds limit,
    then set symptom NO_SYM/reset FUP_CH error,
  Endif
Else Reset all the timers,
Endif

Details of the symptom calculation and error detection is given below. The anti-bounce is done internally in the software.

```
IF(1)   LV_ENA_DIAG_FUP_CH
THEN(1)
        Increment timer for no symptom detection :
    T_FUP_CH_DIAG_PASS_OK_MIN + 0.02s (until max reached)
       Check if FUP is too low :
   IF(2)   FUP_DIF > C_FUP_DIF_DIAG_MAX
   THEN(2)
```

Copyright©Continental AG. Transmittal, reproduction, dissemination and/or editing of this document as well as utilisation of its contents and communication thereof to others without expressed authorisation are prohibited. Offenders will be held liable for payment of damages. All rights created by patent grant or registration of a utility model or design patent are reserved.

```
            Until max is reached :
      T_FUP_CH_DIAG_MIN = T_FUP_CH_DIAG_MIN + 0.02s
   ELSE(2)
      T_FUP_CH_DIAG_MIN = 0s
   END(2)

       Check if FUP is too high :
   IF(2)  FUP_DIF < C_FUP_DIF_DIAG_MIN
   THEN(2)
            Until max is reached :
      T_FUP_CH_DIAG_MAX = T_FUP_CH_DIAG_MAX + 0.02s
   ELSE(2)
      T_FUP_CH_DIAG_MAX = 0s
   END(2)
       Setting of error symptom :
   IF(2)  T_FUP_CH_DIAG_MAX > C_T_FUP_CH_DIAG_MAX
   THEN(2)
            Symptom FUP too high is detected :
      LV_CDN_DIAG_FUP_CH = 1
      ERR_SYM_FUP_CH = SYM_0
            After debounce :
      LV_ERR_FUP_CH = 1
   ELSE(2)
         IF(3)  T_FUP_CH_DIAG_MIN > C_T_FUP_CH_DIAG_MIN
         THEN(3)
            Symptom FUP too low is detected :
            LV_CDN_DIAG_FUP_CH = 1
            ERR_SYM_FUP_CH = SYM_1
                           After debounce :
            LV_ERR_FUP_CH = 1
         ELSE(3)
              IF(4)(T_FUP_CH_DIAG_MAX == 0s)
              AND  (T_FUP_CH_DIAG_MIN == 0s)
              AND  (T_FUP_CH_DIAG_PASS_OK_MIN >=
                 MAX(C_T_FUP_CH_DIAG_MAX, C_T_FUP_CH_DIAG_MIN))
              THEN(4)
                                   No symptom detected :
                 LV_CDN_DIAG_FUP_CH = 1
                 ERR_SYM_FUP_CH = NO_SYM
                                  After debounce :
                 LV_ERR_FUP_CH = 0
              ELSE(4)
                                    No diagnosis due to pre-debouncing :
                 LV_CDN_DIAG_FUP_CH = 0
              END(4)
         END(3)

   END(2)
ELSE(1)

    Reset of timers :
  LV_CDN_DIAG_FUP_CH = 0
  T_FUP_CH_DIAG_MIN = 0s
  T_FUP_CH_DIAG_MAX = 0s
  T_FUP_CH_DIAG_PASS_OK_MIN = 0 ms
END(1)
```

OBD radar interfaces :

Copyright ©Continental AG. Transmittal, reproduction, dissemination and/or editing of this document as well as utilisation of its contents and communication thereof to others without expressed authorisation are prohibited. Offenders will be held liable for payment of damages. All rights created by patent grant or registration of a utility model or design patent are reserved.

The OBD radar is done for this diagnosis since the fuel pressure monitoring during catalyst heating reflects the quality of the pump delivery during catalyst heating. Since, fuel pressure can be attributed to the characteristics of pump delivery, the quality parameter for the OBD radar monitoring is the fuel pressure deviation (FUP_DIF).

For this particular diagnosis, the pre-condition is the diagnostic condition of the diagnosis itself. When the diagnostic condition is active, then the OBD radar for monitoring of the lambda factor is active.

So, when ever the pre-condition is active, the number of instances when fuel pressure deviation exceeds the calibrated maximum value (error threshold) is recorded in ARSD functionality. Under normal conditions, the fuel pressure deviation should be in between the calibrated base value and calibrated maximum value.

```
IF(1)      LV_CDN_DIAG_FUP_CH
THEN(1)
           ACTION_ARSD_SetOBDS
           (NC_IDX_STD_FUP_CH_H,
           FUP_DIF,
           C_FUP_DIF_CH_H_OBDS_BAS,
           0x80000000,
           C_FUP_DIF_CH_H_OBDS_MAX)

           ACTION_ARSD_SetOBDS
          (NC_IDX_STD_FUP_CH_L,
           FUP_DIF,
           C_FUP_DIF_CH_L_OBDS_BAS,
           C_FUP_DIF_CH_L_OBDS_MIN,
           0x80000000)
END(1)
```

43.32.5 FUP diagnosis during stop-start cycle (LV_ERR_FUP_STST)

▶ General Information

This section describes the FUP diagnosis during start-stop cycle in detail. The purpose of this diagnosis is to monitor the maintaining of fuel high pressure during active stop cycle in the automated stop-start operating mode. The pressure loss in the rail due to the continuous leakage from the injectors should not go below a defined threshold, since sufficient rail pressure is needed to allow a normal engine start when there is a start request from the start-stop operation.

When the fuel pressure goes below a calibrated threshold for a calibrated duration while the vehicle is in stop phase of the start-stop cycle, then the error due to low fuel pressure for start is set.

Copyright ©Continental AG. Transmittal, reproduction, dissemination and/or editing of this document as well as utilisation of its contents and communication thereof to others without expressed authorisation are prohibited. Offenders will be held liable for payment of damages. All rights created by patent grant or registration of a utility model or design patent are reserved.

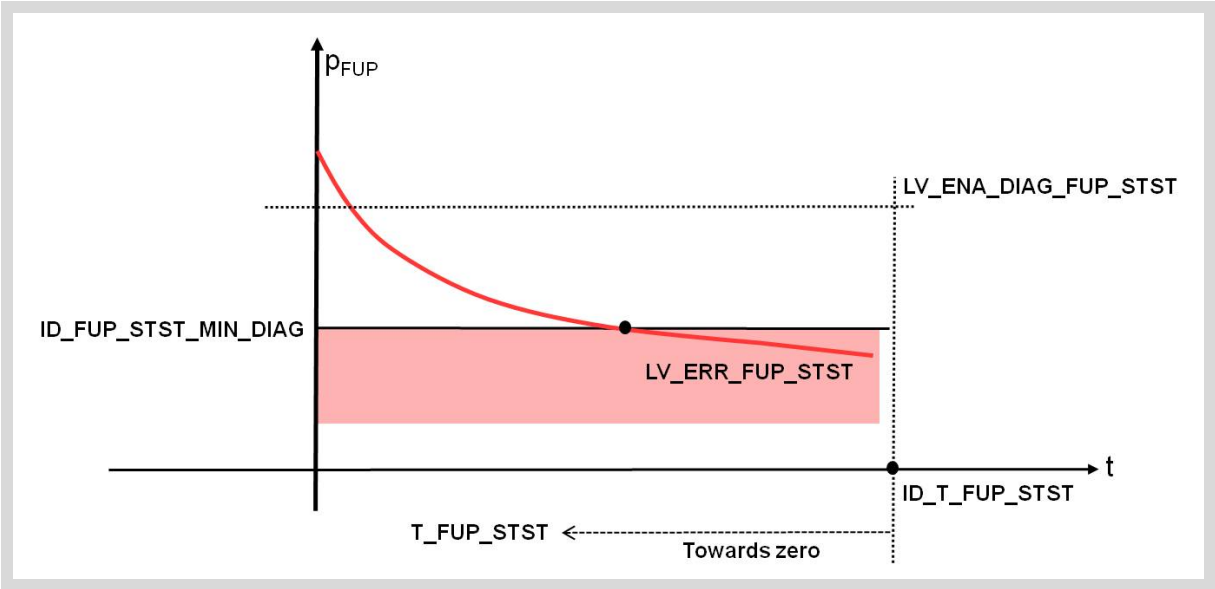

Figure 43.32.6: Representation of FUP diagnosis during start-stop cycle

▶ Application Conditions

Initialisation:

```
at reset and LV_IGK = 0 - -> 1 (OFF2ON)
FUP_STST_INI = 0 hPa
LV_FIRST_VLD_TOOTH_OLD = 0
LV_REC_DIAG_FUP_STST = 0
T_FUP_STST = 0 s
```

Activation: `LV_IGK AND not(LV_FUP_SP_EXT_REQ)`

Deactivation: `if activation is not true`

Recurrence: `20 ms`

▶ Function Description

Enabling of diagnosis :

The FUP stop-start diagnosis is activated once engine stop is detected during stop-start cycle and no valid crank tooth has been detected after engine stop. In addition, a calibratable switch is also provided to de-activate the diagnosis.

When the diagnosis is enabled, the decrement timer (T_FUP_STST) is assigned a calibrated value (ID_T_FUP_STST) corresponding to the fuel temperature in the High pressure pump.

The diagnosis can be inhibited due to specific conditions. The inhibition calculation is defined in the Application Incidence module of the fuel system pressure diagnosis.

```
IF(1)    LC_FUP_STST_DIAG_ENA
    AND   not(LV_INH_ERR_FUP_STST)
    AND   LV_STST_STOP_CYC
    AND   not(LV_FIRST_VLD_TOOTH)
    AND   not(LV_REC_DIAG_FUP_STST)
THEN(1)
  LV_ENA_DIAG_FUP_STST = 1
```

Copyright©Continental AG. Transmittal, reproduction, dissemination and/or editing of this document as well as utilisation of its contents and communication thereof to others without expressed authorisation are prohibited. Offenders will be held liable for payment of damages. All rights created by patent grant or registration of a utility model or design patent are reserved.

```
    Enabling of diagnosis :
    IF(2)  LV_FIRST_VLD_TOOTH_OLD
    THEN(2)
       T_FUP_STST = ID_T_FUP_STST(TFU_HPP)
       FUP_STST_INI = FUP
    END(2)
ELSE(1)
  LV_ENA_DIAG_FUP_STST = 0
  T_FUP_STST = 0s
    IF(3)  LV_ST_END
    THEN(3)
       LV_REC_DIAG_FUP_STST = 0
    END(3)
END(1)
```

Check of diagnostic condition, Symptom calculation and Error detection :

The diagnostic check, symptom detection, debouncing and error detection happen only during the active phase of the diagnosis, i.e. as long as the timer (T_FUP_STST) is running.

In this phase, the check of fuel pressure against a calibrated threshold (ID_FUP_STST_MIN_DIAG) is done. When the fuel pressure decreases below the threshold, then the corresponding diagnostic condition and the failure symptom are set, and the anti-bounce counter is incremented once internally in the software. If the failure symptom is repeatedly detected in consecutive stop-start cycles within the same driving cycle, then the de-bounced error will be set.

If FUP is still above detection threshold after expiration of the timer, then a NO symptom status is sent to error management (ERRM), and the anti-bounce counter is decremented once.

```
IF(1)  LV_ENA_DIAG_FUP_STST
THEN(1)
  T_FUP_STST = T_FUP_STST - 0.02s
     Check FUP decrease during STST stop phase :
  IF(2)  T_FUP_STST > 0s
  THEN(2)
     IF(3)  FUP < ID_FUP_STST_MIN_DIAG(TFU_HPP)
     THEN(3)
        LV_CDN_DIAG_FUP_STST = 1
        ERR_SYM_FUP_STST = SYM_0
        LV_REC_DIAG_FUP_STST = 1
                  After debounce :
        LV_ERR_FUP_STST = 1
     ELSE(3)
        LV_CDN_DIAG_FUP_STST = 0
     END(3)
  ELSE(2)
     LV_CDN_DIAG_FUP_STST = 1
     ERR_SYM_FUP_STST = NO_SYM
     LV_REC_DIAG_FUP_STST = 1
     After debounce :
     LV_ERR_FUP_STST = 0
  END(2)
ELSE(1)
  LV_CDN_DIAG_FUP_STST = 0
END(1)
LV_FIRST_VLD_TOOTH_OLD = LV_FIRST_VLD_TOOTH
```

Copyright ©Continental AG. Transmittal, reproduction, dissemination and/or editing of this document as well as utilisation of its contents and communication thereof to others without expressed authorisation are prohibited. Offenders will be held liable for payment of damages. All rights created by patent grant or registration of a utility model or design patent are reserved.

43.33 Fuel system pressure diagnosis (Appl. Inc.)

Data Definition

Name	Mode	Coded Limits	Display Limits	Resolution	Unit
LV_H_PRS_DIAG_INH	V	0... 1H	0 ...1	1	-
Inhibition condition to deactivate the high pressure system diagnosis					
LV_INH_ERR_FUP_CH	O/V	0... 1H	0 ...1	1	-
Inhibition flag for FUP_CH diagnostics					
LV_INH_ERR_FUP_MFP_PLAUS	O/V	0... 1H	0 ...1	1	-
Inhibition flag for FUP_MFP_PLAUS diagnostics					
LV_INH_ERR_FUP_ORNG	O/V	0... 1H	0 ...1	1	-
Inhibition flag for FUP_ORNG diagnostics					
LV_INH_ERR_FUP_STST	O/V	0... 1H	0 ...1	1	-
Inhibition flag for FUP stop-start diagnosis					
LV_INH_ERR_H_PRS_SYS_BOL_1	O/V	0... 1H	0 ...1	1	-
Inhibition flag for H_PRS_SYS_BOL_1 diagnostics					
LV_INH_ERR_H_PRS_SYS_BOL_2	O/V	0... 1H	0 ...1	1	-
Inhibition flag for H_PRS_SYS_BOL_2 diagnostics					
LV_INH_ERR_H_PRS_SYS_TOL_1	O/V	0... 1H	0 ...1	1	-
Inhibition flag for H_PRS_SYS_TOL_1 diagnostics					
LV_T_MFF_MAX_H_PRS_DIAG_INH	V	0... 1H	0 ...1	1	-
Inhibition condition to deactivate the high pressure system diagnosis via maximum mass fuel flow					
LV_T_MFF_MIN_H_PRS_DIAG_INH	V	0... 1H	0 ...1	1	-
Inhibition condition to deactivate the high pressure system diagnosis via minimum mass fuel flow					
MFF_SP_GRD_FUP_DIAG	V	0... FFFFH	0... 1389	0.02119478	mg/stk
Minimum MFF gradient to enable high pressure diagnosis					
T_MFF_MAX_H_PRS_DIAG_INH	V	0... FFFFH	0... 1310.7	0.02	s
Inhibition timer to deactivate the high pressure system diagnosis via maximum fuel mass flow					
T_MFF_MIN_H_PRS_DIAG_INH	V	0... FFFFH	0... 1310.7	0.02	s
Inhibition timer to deactivate the high pressure system diagnosis via minimum fuel mass flow					

Input Data

C_FAC_FUEL_PUMP_CTL {p. 11987}	MFF_SP_FUP_CTL {p. 11463}	MFP_MAX {p. 11984}	N_32 {p. 8079}
T_AST {p. 8436}			

Calibration Data

Name	Mode	Coded Limits	Display Limits	Resolution	Unit
C_ABC_INC_FUP_CH	V	0... FFH	0... 255	1	-
Increment of the FUP_CH anti-bounce counter					
C_ABC_INC_FUP_MFP_PLAUS	V	0... FFH	0... 255	1	-
Increment of the plausibility check of FUP/MFP anti-bounce counter					
C_ABC_INC_FUP_ORNG	V	0... FFH	0... 255	1	-

Copyright ©Continental AG. Transmittal, reproduction, dissemination and/or editing of this document as well as utilisation of its contents and communication thereof to others without expressed authorisation are prohibited. Offenders will be held liable for payment of damages. All rights created by patent grant or registration of a utility model or design patent are reserved.

Name	Mode	Coded Limits	Display Limits	Resolution	Unit
Increment of the FUP ORNG anti-bounce counter					
C_ABC_INC_FUP_STST	V	0... FFH	0... 255	1	-
Increment of the FUP_STST anti-bounce counter					
C_ABC_INC_H_PRS_SYS	V	0... FFH	0... 255	1	-
Increment of high pressure system monitoring anti-bounce counter					
C_ABC_MAX_FUP_CH	V	1... FFH	1... 255	1	-
Threshold to be reached, before FUP_CH error					
C_ABC_MAX_FUP_MFP_PLAUS	V	1... FFH	1... 255	1	-
Threshold to be reached, before plausibility check error of FUP/MFP					
C_ABC_MAX_FUP_ORNG	V	1... FFH	1... 255	1	-
Threshold to be reached, before FUP ORNG error					
C_ABC_MAX_FUP_STST	V	1... FFH	1... 255	1	-
Threshold to be reached, before FUP_STST error					
C_ABC_MAX_H_PRS_SYS	V	1... FFH	1... 255	1	-
Threshold to be reached, before permanently activating high pressure system monitoring error					
C_MFF_MIN_H_PRS_DIAG_INH	V	0... FFFFH	0... 1389	0.02119478	mg/stk
Minimum mass fuel flow used for inhibition condition to deactivate the high pressure system diagnosis					
C_MFF_SP_GRD_FUP_DIAG_MAX	V	0... FFFFH	0... 1389	0.02119478	mg/stk
Maximum MFF gradient to enable high pressure diagnosis					
C_MFF_SP_GRD_FUP_DIAG_MIN	V	0... FFFFH	0... 1389	0.02119478	mg/stk
Minimum MFF gradient to enable high pressure diagnosis					
C_MFP_OFS_H_PRS_DIAG_INH	V	0... FFFFH	0... 1389	0.02119478	mg/stk
MFP offset for deactivation of the high pressure system diagnosis					
C_N_32_FUP_ORNG_H_PRS_MAX	V	0... FFH	0... 8160	32	rpm
Engine speed threshold to disable FUP_ORNG					
C_T_AST_H_PRS_DIAG_INH	V	0... FFFFH	0... 6553.5	0.1	s
Inhibit time for deactivation of the high pressure system diagnosis					
C_T_FUP_ORNG_DIAG_INH	V	0... FFFFH	0... 1310.7	0.02	s
Inhibit time for deactivation of the FUP ORNG diagnosis					
C_T_MFF_MAX_H_PRS_DIAG_INH	V	0... FFFFH	0... 1310.7	0.02	s
Inhibition time to deactivate the high pressure system diagnosis via maximum fuel mass flow					
C_T_MFF_MIN_H_PRS_DIAG_INH	V	0... FFFFH	0... 1310.7	0.02	s
Inhibition time to deactivate the high pressure system diagnosis via minimum fuel mass flow					

Configuration Data

Name	Mode	Coded Limits	Display Limits	Resolution	Unit
NC_FID_ERR_CDN_FUP_ORNG	-	0... FFFFH	0... 65535	1	-
Additional activation condition to run the FUP_ORNG diagnostics even in case if engine speed exeeds threshold					
NC_FID_ERR_FUP_CH	-	0... FFFFH	0... 65535	1	-
Run the FUP_CH diagnostics					
NC_FID_ERR_FUP_MFP_PLAUS	-	0... FFFFH	0... 65535	1	-
Run the FUP_MFP_PLAUS diagnostics					
NC_FID_ERR_FUP_ORNG	-	0... FFFFH	0... 65535	1	-
Run the FUP_ORNG diagnostics					
NC_FID_ERR_FUP_STST	-	0... FFFFH	0... 65535	1	-

Copyright ©Continental AG. Transmittal, reproduction, dissemination and/or editing of this document as well as utilisation of its contents and communication thereof to others without expressed authorisation are prohibited. Offenders will be held liable for payment of damages. All rights created by patent grant or registration of a utility model or design patent are reserved.

Name	Mode	Coded Limits	Display Limits	Resolution	Unit
Run the FUP stop-start diagnosis - FUP too low					
NC_FID_ERR_H_PRS_SYS_BOL_1	-	0... FFFFH	0... 65535	1	-
Run the H_PRS_SYS_BOL_1 diagnostics					
NC_FID_ERR_H_PRS_SYS_BOL_2	-	0... FFFFH	0... 65535	1	-
Run the H_PRS_SYS_BOL_2 diagnostics					
NC_FID_ERR_H_PRS_SYS_TOL_1	-	0... FFFFH	0... 65535	1	-
Run the H_PRS_SYS_TOL_1 diagnostics					
NC_IDX_ERR_FUP_CH_H	-	0... FFFFH	0... 65535	1	-
Fuel pressure monitoring during catalyst heating - fuel pressure is too high					
NC_IDX_ERR_FUP_CH_L	-	0... FFFFH	0... 65535	1	-
Fuel pressure monitoring during catalyst heating - fuel pressure is too low					
NC_IDX_ERR_FUP_MFP_PLAUS_H	-	0... FFFFH	0... 65535	1	-
Failure index for diagnostic instance "High Pressure sensor inappropriately high"					
NC_IDX_ERR_FUP_MFP_PLAUS_L	-	0... FFFFH	0... 65535	1	-
Failure index for diagnostic instance "High Pressure sensor inappropriately low"					
NC_IDX_ERR_FUP_ORNG_BOL_1	-	0... FFFFH	0... 65535	1	-
Fuel pressure out-of-range diagnosis - fuel pressure go below bottom limit 1					
NC_IDX_ERR_FUP_ORNG_TOL_1	-	0... FFFFH	0... 65535	1	-
Fuel pressure out-of-range diagnosis - fuel pressure exceeds top limit 1					
NC_IDX_ERR_FUP_ORNG_TOL_2	-	0... FFFFH	0... 65535	1	-
Fuel pressure out-of-range diagnosis - fuel pressure exceeds top limit 2					
NC_IDX_ERR_FUP_STST	-	1... FFFFH	1... 65535	1	-
FUP stop-start diagnosis - FUP too low					
NC_IDX_ERR_H_PRS_SYS_BOL_1	-	0... FFFFH	0... 65535	1	-
High pressure system monitoring "Delivery of high pressure pump too low"					
NC_IDX_ERR_H_PRS_SYS_BOL_2	-	0... FFFFH	0... 65535	1	-
High pressure system monitoring "Delivery of high pressure pump too low or OPV defect"					
NC_IDX_ERR_H_PRS_SYS_TOL_1	-	0... FFFFH	0... 65535	1	-
High pressure system monitoring "Delivery of high pressure pump too high"					

Import actions:

ACTION_FARM_GetPermission(**IN** <PRM_FID>, **OUT** <PRM_LV_PRMS>)

Error treatment

Failure Identifier	Symptom Description	Nr	OBD Sym DTC	Filter Type	CARB class
Failure Description	**Diagnostic Description**				
FUP_MFP_PLAUS	NC_IDX_ERR_FUP_MFP_PLAUS_H	0		STD_INI	CC
Fuel pressure/mass fuel pump plausibility check	*Failure index for diagnostic instance "High Pressure sensor inappropriately high"*				
	NC_IDX_ERR_FUP_MFP_PLAUS_L	1			
	Failure index for diagnostic instance "High Pressure sensor inappropriately low"				

Copyright ©Continental AG. Transmittal, reproduction, dissemination and/or editing of this document as well as utilisation of its contents and communication thereof to others without expressed authorisation are prohibited. Offenders will be held liable for payment of damages. All rights created by patent grant or registration of a utility model or design patent are reserved.

Failure Identifier	Symptom Description	Nr	OBD Sym DTC	Filter Type	CARB class
Failure Description	**Diagnostic Description**				
		2			
		3			

Definition of the behavior of the initialization				
ERR-Flag		Reset at ECU Reset	reset at Key ON	Latch error on fail
		YES	YES	NO
ABC	ABC-class	MAX-INC after Failure	No Reset at NEWDC	Init on Condition Loss
	ABC	NO	NO	NO
Description of the implementation				
	prestore FRF	RBM	Similar conditions	
	NO	CENTRAL		

Failure Identifier	Symptom Description	Nr	OBD Sym DTC	Filter Type	CARB class
Failure Description	**Diagnostic Description**				
H_PRS_SYS	NC_IDX_ERR_H_PRS_SYS_TOL_1	0		STD_INI	CC
High pressure system monitoring	*High pressure system monitoring "Delivery of high pressure pump too high"*				
	NC_IDX_ERR_H_PRS_SYS_BOL_1	1			
	High pressure system monitoring "Delivery of high pressure pump too low"				
	NC_IDX_ERR_H_PRS_SYS_BOL_2	2			
	High pressure system monitoring "Delivery of high pressure pump too low or OPV defect"				
		3			

Definition of the behavior of the initialization				
ERR-Flag		Reset at ECU Reset	reset at Key ON	Latch error on fail
		YES	YES	NO
ABC	ABC-class	MAX-INC after Failure	No Reset at NEWDC	Init on Condition Loss
	ABC	NO	NO	NO
Description of the implementation				
	prestore FRF	RBM	Similar conditions	
	NO	CENTRAL		

Copyright ©Continental AG. Transmittal, reproduction, dissemination and/or editing of this document as well as utilisation of its contents and communication thereof to others without expressed authorisation are prohibited. Offenders will be held liable for payment of damages. All rights created by patent grant or registration of a utility model or design patent are reserved.

Failure Identifier	Symptom Description	Nr	OBD Sym DTC	Filter Type	CARB class
Failure Description	**Diagnostic Description**				
FUP_ORNG	NC_IDX_ERR_FUP_ORNG_TOL_1	0		STD_INI	CC
FUP_ORNG	*Fuel pressure out-of-range diagnosis - fuel pressure exceeds top limit 1*				
	NC_IDX_ERR_FUP_ORNG_TOL_2	1			
	Fuel pressure out-of-range diagnosis - fuel pressure exceeds top limit 2				
	NC_IDX_ERR_FUP_ORNG_BOL_1	2			
	Fuel pressure out-of-range diagnosis - fuel pressure go below bottom limit 1				
		3			

Definition of the behavior of the initialization				
ERR-Flag		**Reset at ECU Reset**	**reset at Key ON**	**Latch error on fail**
		YES	YES	NO
ABC	**ABC-class**	**MAX-INC after Failure**	**No Reset at NEWDC**	**Init on Condition Loss**
	ABC	NO	NO	NO
Description of the implementation				
	prestore FRF	**RBM**	**Similar conditions**	
	NO	CENTRAL		

Failure Identifier	Symptom Description	Nr	OBD Sym DTC	Filter Type	CARB class
Failure Description	**Diagnostic Description**				
FUP_CH	NC_IDX_ERR_FUP_CH_H	0		STD_INI	CC
Fuel pressure monitoring during catalyst heating	*Fuel pressure monitoring during catalyst heating - fuel pressure is too high*				
	NC_IDX_ERR_FUP_CH_L	1			
	Fuel pressure monitoring during catalyst heating - fuel pressure is too low				
		2			
		3			

Definition of the behavior of the initialization				
ERR-Flag		**Reset at ECU Reset**	**reset at Key ON**	**Latch error on fail**
		YES	YES	NO
ABC	**ABC-class**	**MAX-INC after Failure**	**No Reset at NEWDC**	**Init on Condition Loss**
	ABC	NO	NO	NO
Description of the implementation				
	prestore FRF	**RBM**	**Similar conditions**	
	NO	DIAG		

Copyright ©Continental AG. Transmittal, reproduction, dissemination and/or editing of this document as well as utilisation of its contents and communication thereof to others without expressed authorisation are prohibited. Offenders will be held liable for payment of damages. All rights created by patent grant or registration of a utility model or design patent are reserved.

Failure Identifier	Symptom Description	Nr	OBD Sym DTC	Filter Type	CARB class
Failure Description	**Diagnostic Description**				
FUP_STST	NC_IDX_ERR_FUP_STST	0		STD_INI	CC
Fuel Pressure monitoring during stop-start cycle	*FUP stop-start diagnosis - FUP too low*				
		1			
		2			
		3			

Definition of the behavior of the initialization				
ERR-Flag		**Reset at ECU Reset**	**reset at Key ON**	**Latch error on fail**
		YES	YES	NO
ABC	**ABC-class**	**MAX-INC after Failure**	**No Reset at NEWDC**	**Init on Condition Loss**
	ABC	NO	NO	NO
Description of the implementation				
	prestore FRF	**RBM**	**Similar conditions**	
	NO	NO		

General Information

This module contains the inhibition condition calculation for the diagnosis of high pressure fuel system.

The fuel system high pressure diagnosis consists of,

1. Fuel pressure plausibility diagnosis
2. High pressure system diagnosis
3. Fuel pressure out of range diagnosis
4. Fuel pressure diagnosis during catalyst heating
5. Fuel pressure diagnosis during start-stop cycle

Note : The diagnostic inhibition for the pre-configured errors via function identifiers (NC_FID_XXX) is done via ACTION_FARM_GetPermission (NC_FID_XXX, LV_PRMS). Existence of any errors which are configured to the function identifier will set the permission flag (LV_PRMS) to zero. However, the status of the permission can be observed via the LV_FID_INH_XXX of the respective identifier, and can be found as visible in the .a2l file.

Appendix to Error treatment:

Inhibited by FIDs:

Copyright ©Continental AG. Transmittal, reproduction, dissemination and/or editing of this document as well as utilisation of its contents and communication thereof to others without expressed authorisation are prohibited. Offenders will be held liable for payment of damages. All rights created by patent grant or registration of a utility model or design patent are reserved.

Diagnostic instance	FID	TYPE
NC_IDX_ERR_FUP_CH_H	NC_FID_ERR_FUP_CH	INH
NC_IDX_ERR_FUP_CH_L	NC_FID_ERR_FUP_CH	INH
NC_IDX_ERR_FUP_MFP_PLAUS_H	NC_FID_ERR_FUP_MFP_PLAUS	INH
NC_IDX_ERR_FUP_MFP_PLAUS_L	NC_FID_ERR_FUP_MFP_PLAUS	INH
NC_IDX_ERR_FUP_ORNG_BOL_1	NC_FID_ERR_FUP_ORNG	INH
NC_IDX_ERR_FUP_ORNG_TOL_1	NC_FID_ERR_FUP_ORNG	INH
NC_IDX_ERR_FUP_ORNG_TOL_2	NC_FID_ERR_FUP_ORNG	INH
NC_IDX_ERR_FUP_STST	NC_FID_ERR_FUP_STST	INH
NC_IDX_ERR_H_PRS_SYS_BOL_1	NC_FID_ERR_H_PRS_SYS_BOL_1	INH
NC_IDX_ERR_H_PRS_SYS_BOL_2	NC_FID_ERR_H_PRS_SYS_BOL_2	INH
NC_IDX_ERR_H_PRS_SYS_TOL_1	NC_FID_ERR_H_PRS_SYS_TOL_1	INH

▶ Application Conditions

Initialisation:

```
on RST:
MFF_SP_GRD_FUP_DIAG = MFF_SP_FUP_CTL
T_MFF_MAX_H_PRS_DIAG_INH = 0 %[s]
T_MFF_MIN_H_PRS_DIAG_INH = 0 %[s]
```

Activation: `always`

Deactivation: `never`

Recurrence: `20ms`

▶ Function Description

The inhibition of any diagnosis is intended to stop the running of the diagnosis if the conditions optimal to run the diagnosis are not met. Each of the high pressure system diagnosis have individual inhibition conditions.
In addition to individual inhibition conditions, all the diagnostic inhibition calculations also have some common operating conditions under which the inhibition flags of the diagnoses can also be raised.

43.33.1 Common conditions for inhibition calculation

It is necessary that the gradient of the fuel mass flow set point (MFP_SP_FUP_CTL) for fuel pressure control is always within limits in order to perform high pressure system diagnosis. The fuel mass flow set point gradient (MFP_SP_GRD_FUP_DIAG) should be above the minimum calibratable threshold (-C_MFF_SP_GRD_FUP_DIAG_MIN) and below the maximum calibratable threshold (C_MFF_SP_GRD_FUP_DIAG_MAX) in order to enable the diagnosis.

Copyright ©Continental AG. Transmittal, reproduction, dissemination and/or editing of this document as well as utilisation of its contents and communication thereof to others without expressed authorisation are prohibited. Offenders will be held liable for payment of damages. All rights created by patent grant or registration of a utility model or design patent are reserved.

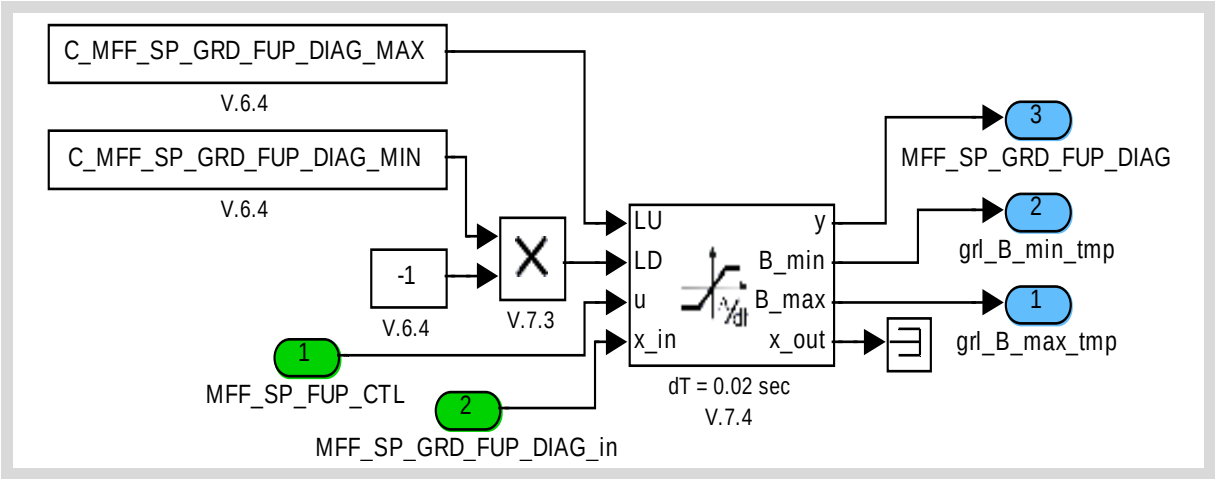

Figure 43.33.1: Gradient limiter for MFF_SP_FUP_CTL

Furthermore, the diagnosis will also be disabled if the fuel mass requested from the pump is close to the maximum possible amount which can be delivered from the pump. This limit close to the maximum possible delivery can be set through a calibratable additional offset (C_MFP_OFS_H_PRS_DIAG_INH).
Also, since the stroke to cylinder ratio of the pump could affect the amount of fuel mass flow delivered, a calibratable factor (C_FAC_FUEL_PUMP_CTL) is given in order to consider this for determination of maximum flow.

If there is no maximum fuel flow and if the fuel mass flow gradient is within limits for a calibratable time (C_T_MFF_MAX_H_PRS_DIAG_INH), then the inhibition condition for the high pressure diagnosis is inactive.

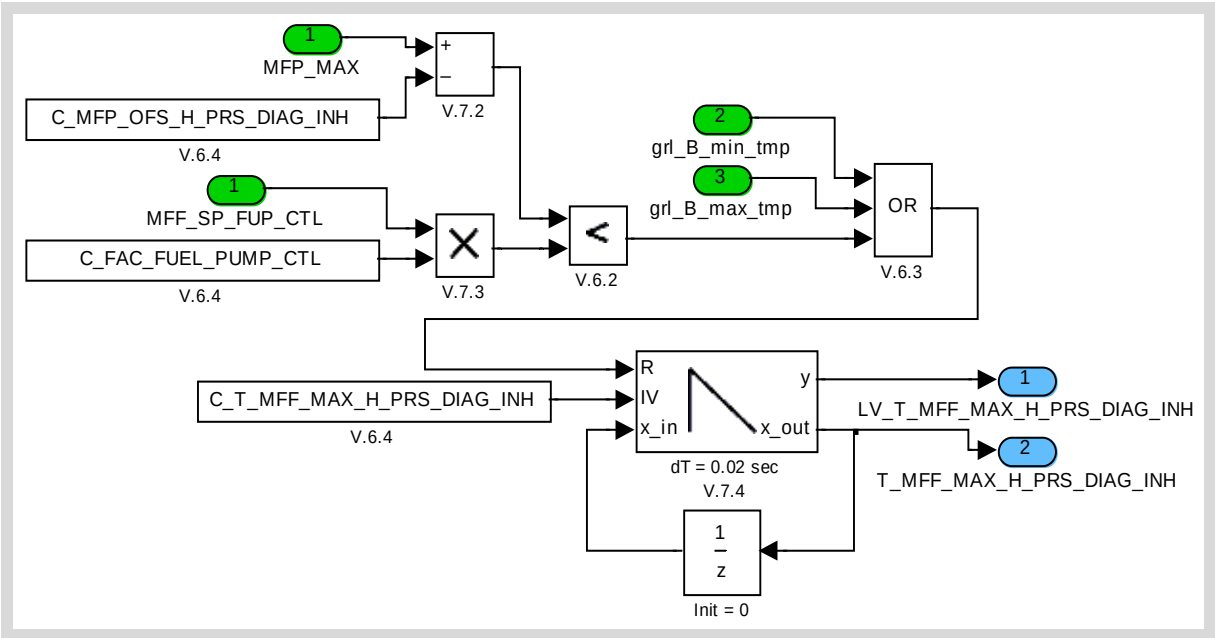

Figure 43.33.2: Decrement timer for diagnosis inhibiton due to maximum flow or gradient limitation

In addition to the maximum fuel flow inhibition, there exists an inhibition condition to deactivate the high pressure system diagnosis in case of minimum fuel mass flow.

Copyright ©Continental AG. Transmittal, reproduction, dissemination and/or editing of this document as well as utilisation of its contents and communication thereof to others without expressed authorisation are prohibited. Offenders will be held liable for payment of damages. All rights created by patent grant or registration of a utility model or design patent are reserved.

Minimum flow is indicated if the fuel mass flow set point is lesser than a calibratable threshold (C_MFF_MIN_H_PRS_DIAG_INH).

If there is no minimum fuel flow for a calibratable time (C_T_MFF_MIN_H_PRS_DIAG_INH), then the inhibition condition for the high pressure diagnosis is inactive.

This inhibition condition is triggered usually in MPI mode or sometimes when the system is in PUC mode (Fuel cut-off phase), since the DI injection fuel mass (MFF_SP_FUP_CTL) goes to zero during these modes.

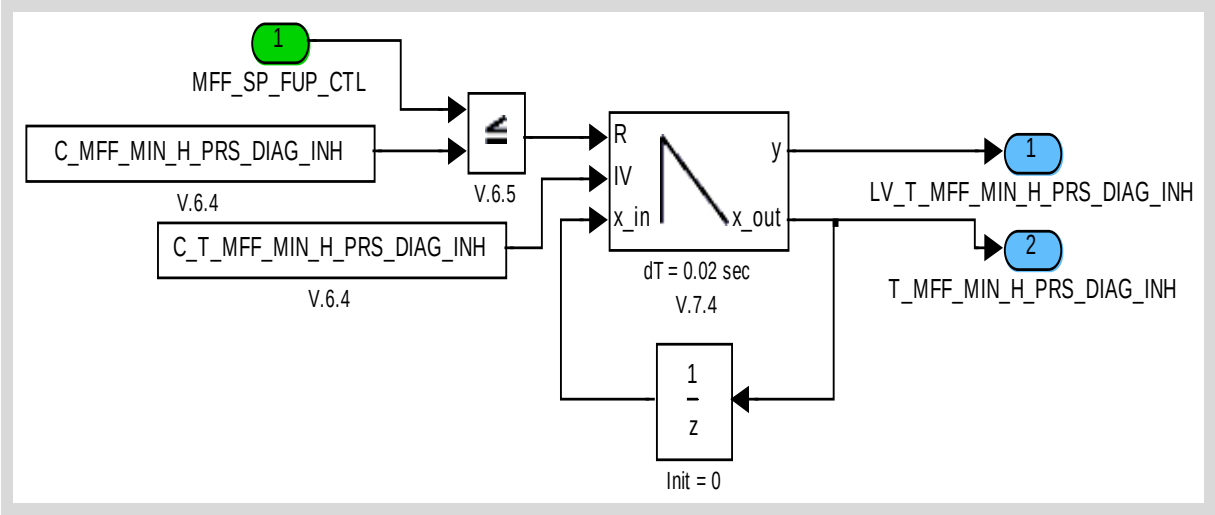

Figure 43.33.3: Decrement timer for diagnosis inhibition due to minimum flow

43.33.1.1 General inhibition condition for high pressure system diagnosis

This is a general inhibition condition for all the high pressure system diagnosis. It is triggered in case,
1. If fuel mass flow exceeds maximum limit, or,
2. If the time after start is below a calibratable threshold (C_T_AST_H_PRS_DIAG_INH).

```
LV_H_PRS_DIAG_INH =
  ( LV_T_MFF_MAX_H_PRS_DIAG_INH OR  (T_AST <= C_T_AST_H_PRS_DIAG_INH) )
```

43.33.2 Individual inhibition calculation for fuel system pressure diagnosis

This section describes the individual inhibition calculations for all the fuel pressure system diagnosis.

43.33.2.1 Fuel pressure plausibility diagnosis inhibition

This is the inhibition condition for the fuel pressure plausibility diagnosis. It is triggered in case,
1. Through the function identifier (NC_FID_ERR_FUP_MFP_PLAUS) which contains the calibrated error configuration in the Fault reaction manager (FARM), or,
2. If the general high pressure system diagnosis inhibition is active, or,
3. If fuel mass flow is below the minimum limit.

```
LV_INH_ERR_FUP_MFP_PLAUS =
  ( not(ACTION_FARM_GetPermission(NC_FID_ERR_FUP_MFP_PLAUS))
  OR  LV_H_PRS_DIAG_INH
  OR  LV_T_MFF_MIN_H_PRS_DIAG_INH
  )
```

Copyright©Continental AG. Transmittal, reproduction, dissemination and/or editing of this document as well as utilisation of its contents and communication thereof to others without expressed authorisation are prohibited. Offenders will be held liable for payment of damages. All rights created by patent grant or registration of a utility model or design patent are reserved.

Copyright ©Continental AG. Transmittal, reproduction, dissemination and/or editing of this document as well as utilisation of its contents and communication thereof to others without expressed authorisation are prohibited. Offenders will be held liable for payment of damages. All rights created by patent grant or registration of a utility model or design patent are reserved.

43.33.2.2 Fuel pressure out of range diagnosis inhibition

This is the inhibition condition for all the fuel pressure out of range diagnosis (Bottom limits 1 and 2 and Top limit). It is triggered in case,

1. Through the function identifier (NC_FID_ERR_FUP_ORNG) which contains the calibrated error configuration in FARM, or,
2. If the time after start is below a calibratable threshold (C_T_FUP_ORNG_DIAG_INH), or,
3. If the engine speed is above a calibratable threshold (C_N_32_FUP_ORNG_H_PRS_MAX) and through the function identifier (NC_FID_ERR_CDN_FUP_ORNG) which contains the calibrated error configuration in the FARM.

```
LV_INH_ERR_FUP_ORNG =
   ( not(ACTION_FARM_GetPermission(NC_FID_ERR_FUP_ORNG))
  OR   (T_AST <= C_T_FUP_ORNG_DIAG_INH)
  OR   ( (N_32 > C_N_32_FUP_ORNG_H_PRS_MAX)
       AND   not(ACTION_FARM_GetPermission(NC_FID_ERR_CDN_FUP_ORNG))
      )
   )
```

43.33.2.3 Fuel pressure out of range (bottom limit 1) diagnosis inhibition

This is the inhibition condition for the fuel pressure out of range diagnosis for bottom limit 1 (BOL_1). It is triggered in case,

1. Through the function identifier (NC_FID_ERR_H_PRS_SYS_BOL_1) which contains the calibrated error configuration in FARM, or,
2. If the general high pressure system diagnosis inhibition is active, or,
3. If fuel mass flow is below the minimum limit.

```
LV_INH_ERR_H_PRS_SYS_BOL_1 =
   ( not(ACTION_FARM_GetPermission(NC_FID_ERR_H_PRS_SYS_BOL_1))
  OR   LV_H_PRS_DIAG_INH
  OR   LV_T_MFF_MIN_H_PRS_DIAG_INH
   )
```

43.33.2.4 Fuel pressure out of range (bottom limit 2) diagnosis inhibition

This is the inhibition condition for the fuel pressure out of range diagnosis for bottom limit 2 (BOL_2). It is triggered in case,

1. Through the function identifier (NC_FID_ERR_H_PRS_SYS_BOL_2) which contains the calibrated error configuration in FARM, or,
2. If the general high pressure system diagnosis inhibition is active, or,
3. If fuel mass flow is below the minimum limit.

```
LV_INH_ERR_H_PRS_SYS_BOL_2 =
   ( not(ACTION_FARM_GetPermission(NC_FID_ERR_H_PRS_SYS_BOL_2))
  OR   LV_H_PRS_DIAG_INH
  OR   LV_T_MFF_MIN_H_PRS_DIAG_INH
   )
```

43.33.2.5 Fuel pressure out of range (top limit 1) diagnosis inhibition

This is the inhibition condition for the fuel pressure out of range diagnosis for top limit (TOL_1). It is triggered in case,

1. Through the function identifier (NC_FID_ERR_H_PRS_SYS_TOL_1) which contains the calibrated error configuration in FARM, or,
2. If the general high pressure system diagnosis inhibition is active, or,
3. If fuel mass flow is below the minimum limit.

```
LV_INH_ERR_H_PRS_SYS_TOL_1 =
```

```
  ( not(ACTION_FARM_GetPermission(NC_FID_ERR_H_PRS_SYS_TOL_1))
  OR  LV_H_PRS_DIAG_INH
  OR  LV_T_MFF_MIN_H_PRS_DIAG_INH
  )
```

43.33.2.6 Inhibition of fuel pressure diagnosis during catalyst heating

This is the inhibition condition for the fuel pressure diagnosis during catalyst heating. It is triggered in case,
1. Through the function identifier (NC_FID_ERR_FUP_CH) which contains the calibrated error configuration in FARM, or,
2. If fuel mass flow exceeds the maximum limit (or if the fuel mass flow gradient exceeds its limits), or,
3. If fuel mass flow is below the minimum limit.

```
LV_INH_ERR_FUP_CH =
  ( not(ACTION_FARM_GetPermission(NC_FID_ERR_FUP_CH))
  OR  LV_T_MFF_MAX_H_PRS_DIAG_INH
  OR  LV_T_MFF_MIN_H_PRS_DIAG_INH
  )
```

43.33.2.7 Inhibition of fuel pressure diagnosis during start-stop cycle

This is the inhibition condition for the fuel pressure diagnosis during start-stop. It is triggered in case, through the function identifier (NC_FID_ERR_FUP_STST) which contains the calibrated error configuration in FARM.

```
LV_INH_ERR_FUP_STST = not(ACTION_FARM_GetPermission(NC_FID_ERR_FUP_STST))
```

Copyright ©Continental AG. Transmittal, reproduction, dissemination and/or editing of this document as well as utilisation of its contents and communication thereof to others without expressed authorisation are prohibited. Offenders will be held liable for payment of damages. All rights created by patent grant or registration of a utility model or design patent are reserved.

43.34 Fuel system pressure diagnosis for low pressure

Data Definition

Name	Mode	Coded Limits	Display Limits	Resolution	Unit
FUP_EFP_CTL_I_ADD_AD	V	8000... 7FFFH	-86945.33 ...86942.67	2.6533608	hPa
I-share (optionally added with adaptation value) used for electrical fuel pump control					
LF_STATE_DGO_FUP_EFP_CTL_AD	-	0... FFFFH	0... 65535	1	-
This parameter indicates the state of FUP_EFP_CTL_AD diagnostic - bit0 (CDN) : 1=condition true - bit1 (SYM) : 1=symptom active - bit2 (NO_VLD) : 1=diagnostic output not valid					
LF_STATE_DGO_FUP_EFP_CTL_DIF	-	0... FFFFH	0... 65535	1	-
This parameter indicates the state of FUP_EFP_CTL_DIF diagnostic - bit0 (CDN) : 1=condition true - bit1 (SYM) : 1=symptom active - bit2 (NO_VLD) : 1=diagnostic output not valid					
LF_STATE_DGO_FUP_EFP_CTL_I	-	0... FFFFH	0... 65535	1	-
This parameter indicates the state of FUP_EFP_CTL_I diagnostic - bit0 (CDN) : 1=condition true - bit1 (SYM) : 1=symptom active - bit2 (NO_VLD) : 1=diagnostic output not valid					
LF_STATE_DGO_FUP_EFP_ORNG_BOL	-	0... FFFFH	0... 65535	1	-
This parameter indicates the state of FUP_EFP_ORNG_BOL diagnostic - bit0 (CDN) : 1=condition true - bit1 (SYM) : 1=symptom active - bit2 (NO_VLD) : 1=diagnostic output not valid					
LF_STATE_DGO_FUP_EFP_ORNG_TOL_1	-	0... FFFFH	0... 65535	1	-
This parameter indicates the state of FUP_EFP_ORNG_TOL_1 diagnostic - bit0 (CDN) : 1=condition true - bit1 (SYM) : 1=symptom active - bit2 (NO_VLD) : 1=diagnostic output not valid					
LF_STATE_DGO_FUP_EFP_ORNG_TOL_2	-	0... FFFFH	0... 65535	1	-
This parameter indicates the state of FUP_EFP_ORNG_TOL_2 diagnostic - bit0 (CDN) : 1=condition true - bit1 (SYM) : 1=symptom active - bit2 (NO_VLD) : 1=diagnostic output not valid					
LV_CDN_DIAG_FUP_EFP_CTL	O/V	0... 1H	0 ...1	1	-
Common diagnosis condition for low pressure control diagnoses					
LV_CDN_DIAG_FUP_EFP_CTL_ORNG	V	0... 1H	0 ...1	1	-
Common diagnosis condition for fuel low pressure control and out-of-range diagnoses					
LV_CDN_DIAG_FUP_EFP_ORNG	V	0... 1H	0 ...1	1	-
Diagnosis condition for fuel low pressure out-of-range diagnosis					
T_ON_DLY_FUP_EFP_CTL_DIF	V	0... FFFFH	0... 1310.7	0.02	s
Timer for turn on delayed signal of present failure of fuel low pressure control diagnosis - control deviation is out-of-range					

Input Data

EFPPWM {p. 11807}	FUP_EFP {p. 11905}	FUP_EFP_CTL_AD {p. 11807}	FUP_EFP_CTL_I {p. 11807}
FUP_EFP_DIF {p. 11807}	LV_EFP {p. 11807}	LV_IGK {p. 24082}	MFF_SP_EFP_CTL {p. 11463}
N_32 {p. 8079}	T_AST {p. 8436}	TCO {p. 8846}	

Copyright ©Continental AG. Transmittal, reproduction, dissemination and/or editing of this document as well as utilisation of its contents and communication thereof to others without expressed authorisation are prohibited. Offenders will be held liable for payment of damages. All rights created by patent grant or registration of a utility model or design patent are reserved.

▶ Calibration Data

Name	Mode	Coded Limits	Display Limits	Resolution	Unit
C_EFPPWM_CTL_DIF_MAX_DIAG	V	0... FFFFH	0... 99.99847412109	0.00152588	%
Maximum duty-cycle of the electrical fuel pump to detect present failure of fuel low pressure control diagnosis - control deviation is out-of-range					
C_EFPPWM_CTL_DIF_MIN_DIAG	V	0... FFFFH	0... 99.99847412109	0.00152588	%
Minimum duty-cycle of the electrical fuel pump to detect present failure of fuel low pressure control diagnosis - control deviation is out-of-range					
C_EFPPWM_OBSD_BAS	-	0... FFFFH	0... 99.99847412109	0.00152588	%
Pump speed of the electrical fuel pump as PWM signal - base setpoint					
C_EFPPWM_OBSD_MAX	-	0... FFFFH	0... 99.99847412109	0.00152588	%
Maximum error threshold value					
C_EFPPWM_OBSD_MIN	-	0... FFFFH	0... 99.99847412109	0.00152588	%
Minimum error threshold value					
C_FUP_EFP_CTL_AD_MAX_DIAG	V	8000... 7FFFH	-86945.33 ...86942.67	2.6533608	hPa
Maximum adaptation value used to detect present failure of fuel low pressure control diagnosis - adaptation value is out-of range					
C_FUP_EFP_CTL_AD_MIN_DIAG	V	8000... 7FFFH	-86945.33 ...86942.67	2.6533608	hPa
Minimum adaptation value used to detect present failure of fuel low pressure control diagnosis - adaptation value is out-of range					
C_FUP_EFP_CTL_AD_OBSD_BAS	V	8000... 7FFFH	-86945.33 ...86942.67	2.6533608	hPa
BKS adaptiation value weighted with low pressure set point - base setpoint					
C_FUP_EFP_CTL_AD_OBSD_MAX	-	8000... 7FFFH	-86945.33 ...86942.67	2.6533608	hPa
Maximum error threshold value					
C_FUP_EFP_CTL_AD_OBSD_MIN	-	8000... 7FFFH	-86945.33 ...86942.67	2.6533608	hPa
Minimum error threshold value					
C_FUP_EFP_CTL_DIF_MAX_DIAG	V	8000... 7FFFH	-86945.33 ...86942.67	2.6533608	hPa
Maximum low pressure control deviation to detect present failure of fuel low pressure control diagnosis - control deviation is out-of-range					
C_FUP_EFP_CTL_DIF_MIN_DIAG	V	8000... 7FFFH	-86945.33 ...86942.67	2.6533608	hPa
Minimum low pressure control deviation to detect present failure of fuel low pressure control diagnosis - control deviation is out-of-range					
C_FUP_EFP_CTL_I_ADD_AD_OBSD_BAS	V	8000... 7FFFH	-86945.33 ...86942.67	2.6533608	hPa
Fuel low pressure control diagnosis - I-share - base value					
C_FUP_EFP_CTL_I_ADD_AD_OBSD_MAX	-	8000... 7FFFH	-86945.33 ...86942.67	2.6533608	hPa
Maximum error threshold value					
C_FUP_EFP_CTL_I_ADD_AD_OBSD_MIN	-	8000... 7FFFH	-86945.33 ...86942.67	2.6533608	hPa

Copyright ©Continental AG. Transmittal, reproduction, dissemination and/or editing of this document as well as utilisation of its contents and communication thereof to others without expressed authorisation are prohibited. Offenders will be held liable for payment of damages. All rights created by patent grant or registration of a utility model or design patent are reserved.

Name	Mode	Coded Limits	Display Limits	Resolution	Unit
Minimum error threshold value					
C_FUP_EFP_CTL_I_MAX_DIAG	V	8000... 7FFFH	-86945.33 ...86942.67	2.6533608	hPa
Maximum I-share used to detect present failure of fuel low pressure control diagnosis - I-share (optionally added with adaptation value) is out-of range					
C_FUP_EFP_CTL_I_MIN_DIAG	V	8000... 7FFFH	-86945.33 ...86942.67	2.6533608	hPa
Minimum I-share used to detect present failure of fuel low pressure control diagnosis - I-share (optionally added with adaptation value) is out-of range					
C_FUP_EFP_DIF_OBSD_BAS	V	8000... 7FFFH	-86945.33 ...86942.67	2.6533608	hPa
Deviation of the fuel pressure after fuel pump from the setpoint - base setpoint					
C_FUP_EFP_DIF_OBSD_MAX	-	8000... 7FFFH	-86945.33 ...86942.67	2.6533608	hPa
Maximum error threshold value					
C_FUP_EFP_DIF_OBSD_MIN	-	8000... 7FFFH	-86945.33 ...86942.67	2.6533608	hPa
Minimum error threshold value					
C_FUP_EFP_ORNG_BOL_DIAG	V	0... FFFFH	0... 173888	2.6533608	hPa
Minimum fuel low pressure to detect present failure of fuel low pressure out-of-range diagnosis - fuel low pressure exeeds bottom limit					
C_FUP_EFP_ORNG_TOL_1_DIAG	V	0... FFFFH	0... 173888	2.6533608	hPa
Maximum fuel low pressure to detect present failure of fuel low pressure out-of-range diagnosis - fuel low pressure exeeds top limit 1					
C_FUP_EFP_ORNG_TOL_2_DIAG	V	0... FFFFH	0... 173888	2.6533608	hPa
Maximum fuel low pressure to detect present failure of fuel low pressure out-of-range diagnosis - fuel low pressure exeeds top limit 2					
C_MFF_SP_MAX_FUP_EFP_CTL_DIAG	V	0... FFFFH	0... 1389	0.02119478	mg/stk
Maximum mass fuel flow setpoint for common fuel low pressure control diagnoses condition					
C_MFF_SP_MIN_FUP_EFP_CTL_DIAG	V	0... FFFFH	0... 1389	0.02119478	mg/stk
Minimum mass fuel flow setpoint for common fuel low pressure control diagnoses condition					
C_N_32_MAX_FUP_EFP_CTL_DIAG	V	0... FFH	0... 8160	32	rpm
Maximum engine speed for common fuel low pressure diagnoses condition					
C_N_32_MAX_FUP_EFP_ORNG_DIAG	V	0... FFH	0... 8160	32	rpm
Maximum engine speed for fuel low pressure out-of-range diagnosis condition					
C_N_32_MIN_FUP_EFP_CTL_DIAG	V	0... FFH	0... 8160	32	rpm
Minimum engine speed for common fuel low pressure diagnoses condition					
C_N_32_MIN_FUP_EFP_ORNG_DIAG	V	0... FFH	0... 8160	32	rpm
Minimum engine speed for fuel low pressure out-of-range diagnosis condition					
C_T_AST_FUP_EFP_CTL_ORNG_DIAG	V	0... FFFFH	0... 6553.5	0.1	s
Minimum time after start for common fuel pressure control and out-of-range diagnoses					
C_T_ON_DLY_FUP_EFP_CTL_DIF	V	0... FFFFH	0... 1310.7	0.02	s
Turn on delay time for present failure of fuel low pressure control diagnosis - control deviation is out-of-range					
C_TCO_MAX_FUP_EFP_CTL_DIAG	V	0... FEH	-48... 142.5	0.75	°C
Maximum coolant temperature for common fuel low pressure diagnoses condition					
C_TCO_MIN_FUP_EFP_CTL_DIAG	V	0... FEH	-48... 142.5	0.75	°C
Minimum coolant temperature for common fuel low pressure diagnoses condition					
LC_FUP_EFP_CTL_I_ADD_AD_DIAG	V	0... 1H	0 ...1	1	-
Defines the strategy used for FUP_EFP_CTL_I diagnosis (0: I-share is monitored; 1: I-share added with adaptation value is monitored)					

Copyright ©Continental AG. Transmittal, reproduction, dissemination and/or editing of this document as well as utilisation of its contents and communication thereof to others without expressed authorisation are prohibited. Offenders will be held liable for payment of damages. All rights created by patent grant or registration of a utility model or design patent are reserved.

Configuration Data

Name	Mode	Coded Limits	Display Limits	Resolution	Unit
NC_FID_ERR_FUP_EFP_CTL	-	0... FFFFH	0... 65535	1	-
Run the low pressure control diagnoses					
NC_FID_ERR_FUP_EFP_ORNG	-	0... FFFFH	0... 65535	1	-
Run the fuel low pressure out-of-range diagnosis					
NC_IDX_ERR_FUP_EFP_CTL_AD	-	0... FFFFH	0... 65535	1	-
Fuel low pressure control diagnosis - adaptation value is out-of-range					
NC_IDX_ERR_FUP_EFP_CTL_DIF	-	0... FFFFH	0... 65535	1	-
Fuel low pressure control diagnosis - control deviation is out-of-range					
NC_IDX_ERR_FUP_EFP_CTL_I	-	0... FFFFH	0... 65535	1	-
Fuel low pressure control diagnosis - I-share (optionally added with adaptation value) is out-of-range					
NC_IDX_ERR_FUP_EFP_ORNG_BOL	-	0... FFFFH	0... 65535	1	-
Fuel low pressure out-of-range diagnosis - fuel low pressure exeeds bottom limit					
NC_IDX_ERR_FUP_EFP_ORNG_TOL_1	-	0... FFFFH	0... 65535	1	-
Fuel low pressure out-of-range diagnosis - fuel low pressure exeeds top limit 1					
NC_IDX_ERR_FUP_EFP_ORNG_TOL_2	-	0... FFFFH	0... 65535	1	-
Fuel low pressure out-of-range diagnosis - fuel low pressure exeeds top limit 2					
NC_IDX_STD_FUP_EFP_CTL_AD	-	0... FFFFH	0... 65535	1	-
Fuel low pressure control diagnosis standard deviation - adaptation value is out-of-range					
NC_IDX_STD_FUP_EFP_CTL_DIF_0	-	0... FFFFH	0... 65535	1	-
Fuel low pressure control diagnosis standard deviation - control deviation is out-of-range					
NC_IDX_STD_FUP_EFP_CTL_DIF_1	-	0... FFFFH	0... 65535	1	-
Fuel low pressure control diagnosis standard deviation - control deviation is out-of-range					
NC_IDX_STD_FUP_EFP_CTL_I	-	0... FFFFH	0... 65535	1	-
Fuel low pressure control diagnosis - I-share standard deviation					

Action Definitions

ACTION_FUSL_ResetDiagEfpCtlDif(**IN** <PRM_STATE_INI>, **IN** <PRM_NR_CONF>)					**Mode: O**
Action to erase or restart the diagnostic					
Parameter	**Type**	**Hex.Limits**	**Phys.Limits**	**Resol.**	**Unit**
PRM_STATE_INI	in	0H 1H	CLR REST	-	-
Type of initialization (Clear: CLR; restart: REST)					
PRM_NR_CONF	in	0... FFH	0... 255	1	-
Additional configuration information for the action (may be not used)					

Import actions:

ACTION_ARSD_SetObds(**IN** <PRM_IDX_STD_OBDS>, **IN** <PRM_DATA_AV_OBDS>, **IN** <PRM_DATA_BAS_OBDS>, **IN** <PRM_ERR_THD_MIN_OBDS>, **IN** <PRM_ERR_THD_MAX_OBDS>)

ACTION_ERRM_ResultDiag(**IN** <PRM_IDX_ERR>, **IN** <PRM_STATE_DGO>, **OUT** <PRM_STATE_FIL>)

ACTION_FARM_GetPermission(**IN** <PRM_FID>, **OUT** <PRM_LV_PRMS>)

Copyright ©Continental AG. Transmittal, reproduction, dissemination and/or editing of this document as well as utilisation of its contents and communication thereof to others without expressed authorisation are prohibited. Offenders will be held liable for payment of damages. All rights created by patent grant or registration of a utility model or design patent are reserved.

Error treatment

Diagnostic Identifier	Diagnostic initialization function	NR_CONF	CARB class	OBD DTC
Diagnostic description				
NC_IDX_ERR_FUP_EFP_CTL_I	-	-	CC	
Fuel low pressure control diagnosis - I-share (optionally added with adaptation value) is out-of-range				

Diagnostic Identifier	Diagnostic initialization function	NR_CONF	CARB class	OBD DTC
Diagnostic description				
NC_IDX_ERR_FUP_EFP_CTL_AD	-	-	CC	
Fuel low pressure control diagnosis - adaptation value is out-of-range				

Diagnostic Identifier	Diagnostic initialization function	NR_CONF	CARB class	OBD DTC
Diagnostic description				
NC_IDX_ERR_FUP_EFP_CTL_DIF	ACTION_FUSL_ResetDiagEfpCtlDif	-	CC	
Fuel low pressure control diagnosis - control deviation is out-of-range				

Diagnostic Identifier	Diagnostic initialization function	NR_CONF	CARB class	OBD DTC
Diagnostic description				
NC_IDX_ERR_FUP_EFP_ORNG_TOL_2	-	-	CC	
Fuel low pressure out-of-range diagnosis - fuel low pressure exeeds top limit 2				

Diagnostic Identifier	Diagnostic initialization function	NR_CONF	CARB class	OBD DTC
Diagnostic description				
NC_IDX_ERR_FUP_EFP_ORNG_TOL_1	-	-	CC	
Fuel low pressure out-of-range diagnosis - fuel low pressure exeeds top limit 1				

Diagnostic Identifier	Diagnostic initialization function	NR_CONF	CARB class	OBD DTC
Diagnostic description				
NC_IDX_ERR_FUP_EFP_ORNG_BOL	-	-	CC	
Fuel low pressure out-of-range diagnosis - fuel low pressure exeeds bottom limit				

General Information

Copyright ©Continental AG. Transmittal, reproduction, dissemination and/or editing of this document as well as utilisation of its contents and communication thereof to others without expressed authorisation are prohibited. Offenders will be held liable for payment of damages. All rights created by patent grant or registration of a utility model or design patent are reserved.

This module contains the diagnosis for low pressure fuel system.The low pressure fuel system comprising of the low pressure pump and low pressure fuel sensor at the outlet of the pump or at the low pressure rail (if present). The low pressure fuel control consists of the low pressure controller which is responsible to maintain the required pressure and mass fuel flow from the Electric feed pump (EFP) into the high pressure system. The fuel pressure sensor at the outlet serves as the input for the close loop controller of the EFP. The fuel pressure sensor acquisition from the sensor is done from another module. Fig. 1 below shows the low pressure region (highlighted) of the fuel system consisting of low pressure pump (EFP) and sensor and power amplifier for the EFP.

The fuel low pressure diagnosis performed for OBD-II regulation consists of,

1. Monitoring of the low pressure control
2. Monitoring of low pressure

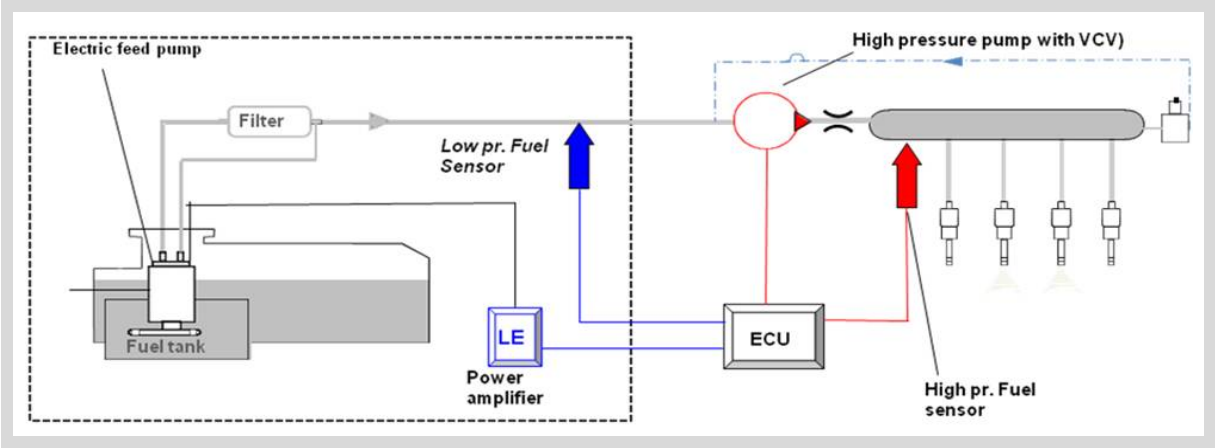

Figure 43.34.1:

System overview with low and high pressure components

▶ Application Conditions

Initialisation:	`on ECU Reset:` `T_ON_DLY_FUP_EFP_CTL_DIF = C_T_ON_DLY_FUP_EFP_CTL_DIF`
Activation:	`always`
Deactivation:	`never`
Recurrence:	`20ms`

▶ Function Description

This diagnosis module performs two main types of low pressure diagnosis.

1. Fuel low pressure control diagnosis :

Fuel low pressure control diagnosis is performed to diagnose the low pressure controller behaviour.
The diagnosis performed for the low pressure controller are,

a. I controller out-of-range diagnosis :

Check the out-of-range limits of the I controller of the EFP control. A calibratable option is available to consider either the I controller individually or along with the EFP controller adaptation value.

Copyright ©Continental AG. Transmittal, reproduction, dissemination and/or editing of this document as well as utilisation of its contents and communication thereof to others without expressed authorisation are prohibited. Offenders will be held liable for payment of damages. All rights created by patent grant or registration of a utility model or design patent are reserved.

b. Adaptation out-of-range diagnosis :
Check the out-of-range behaviour of the adaptation value of the controller.
c. Controller deviation out-of-range diagnosis :
Check the out-of-range behaviour of the fuel pressure deviation. The deviation is of the fuel pressure (after fuel pump) from the low pressure setpoint.

2. Fuel low pressure out-of-range diagnosis :

Fuel pressure out-of-range diagnosis is performed to diagnose the fuel pressure at position of the sensor.
The diagnosis performed for the fuel pressure are,
a. Fuel pressure top limit diagnosis :
Check the fuel low pressure against top limit. There are two calibratable top limits available.
b. Fuel low pressure bottom limit diagnosis :
Check the fuel low pressure against bottom limit.

Note :
LF_STATE_DGO_XXX describes the state of the diagnosis. XXX represents the respective diagnosis (for ex. FUP_EFP_CTL_I, FUP_EFP_ORNG_BOL).
bit 0 of LF_STATE_DGO_XXX equals to LV_CDN_DIAG_XXX (condition to perform diagnosis active)
bit 1 of LF_STATE_DGO_XXX equals to LV_SYM_XXX (diagnosis symptom active)
The symptom flags (LV_SYM_XXX) of individual diagnosis can be found as visibles in .a2l file.

The anti-bounce is performed internally in the software, the calibrations related to anti-bouce for each diagnosis (XXX) can be found in the calibration dataset.
C_ABC_INC_XXX – increment value of anti-bounce counter
C_ABC_DEC_XXX – decrement value of anti-bounce counter
C_ABC_MAX_XXX – maximum limit for anti-bounce counter

The diagnostic inhibition for the pre-configured errors via function identifiers (NC_FID_XXX) is done via ACTION_FARM_GetPermission (NC_FID_XXX, LV_PRMS). However, the status of the permission can be observed via the LV_FID_INH_XXX of the respective identifier, and can be found as visible in the .a2l file.

3. Interfaces for OBD radar functionality for fuel low pressure control diagnosis

The OBD radar functionality intends to collect diagnostic standard data values and to provide them to customer diagnostic tools for statistics purposes.
These statistics can be used to identify how “close” the system was to detecting a failure.
The OBD radar functionality (managed in ARSD aggregate) calculates the customer statistics on the concerned data (Standard and Mode$06 values). Since the interface is standardized, ARSD does not need to know anything about the physics and unit of the component / functionality it has to treat.

The standard value computation depends on the number of error thresholds. And the number of error thresholds depends on the observed data nature. Some examples:
- If the observed data is the absolute value of the difference between a system data and its corresponding setpoint, a failure is detected when the value exceed a certain limit. Then, only one threshold, corresponding to this limit, is needed to evaluate the standard value.
- If the observed data is the battery voltage, a failure is detected when the voltage is too high, or too low. Then 2 error thresholds, used to detect a too high or too low battery voltage, shall be considered in the standard value computation.

If two error thresholds are requested (maximum and minimum thresholds), the standard value behaves as shown below:

Copyright ©Continental AG. Transmittal, reproduction, dissemination and/or editing of this document as well as utilisation of its contents and communication thereof to others without expressed authorisation are prohibited. Offenders will be held liable for payment of damages. All rights created by patent grant or registration of a utility model or design patent are reserved.

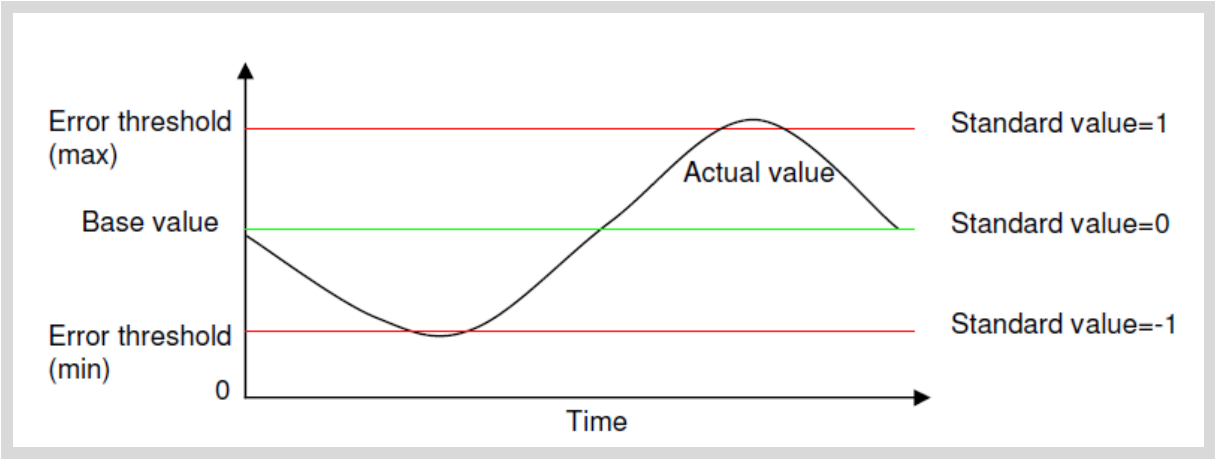

Figure 43.34.2:

Normalization with minimum and maximum thresholds

Depending on the diagnostic function behavior, the thresholds and base value used in the standard value computation can be:
- Existing calibration data used in the context of the diagnostic function,
- Hard coded values (e.g. when the base value is always 0),
- Mode$06 minimum (xx_bol_sae) and/or maximum (xx_tol_sae),
- Runtime computed data,
- New calibration data which shall be defined with the following naming convention:
    - Base value: C_<observed_data>_OBDS_BAS
    - Minimum error threshold: C_<observed_data>_OBDS_MIN
    - Maximum error threshold: C_<observed_data>_OBDS_MAX

43.34.1 Common condition for fuel low pressure control (FUP_EFP_CTL) and out-of-range (FUP_EFP_ORNG) diagnoses

A common pre-condition is defined in order to perform both the low pressure control and out-of-range diagnoses. A calibratable after start time is provided (C_T_AST_FUP_CTL_ORNG_DIAG) in order to activate the diagnosis after the EFP is active (LV_EFP).

```
LV_CDN_DIAG_FUP_EFP_CTL_ORNG =
LV_IGK AND LV_EFP AND  (T_AST > C_T_AST_FUP_EFP_CTL_ORNG_DIAG)
```

43.34.2 Fuel low pressure control diagnoses (FUP_EFP_CTL)

This section describes the common pre-condition calculation for all the low pressure control diagnoses.
The function identifier (NC_FID_ERR_FUP_CTL) contains the calibrated error configuration in the Fault reaction manager (FARM). Existence of any errors which are configured to this function identifier will inhibit the diagnosis by setting the permission flag (LV_PRMS) to zero. Also, the diagnosis is only activated when the engine speed (N_32), coolant temperature (TCO) and the fuel mass flow set point of the EFP (MFF_SP_EFP_CTL) are in range of calibratable thresholds.

```
ACTION_FARM_GetPermission(NC_FID_ERR_FUP_EFP_CTL, LV_PRMS_TMP)

 LV_CDN_DIAG_FUP_EFP_CTL =
  LV_CDN_DIAG_FUP_EFP_CTL_ORNG
  AND  LV_PRMS_TMP
  AND  (N_32 >= C_N_32_MIN_FUP_EFP_CTL_DIAG)
  AND  (N_32 <= C_N_32_MAX_FUP_EFP_CTL_DIAG)
```

Copyright©Continental AG. Transmittal, reproduction, dissemination and/or editing of this document as well as utilisation of its contents and communication thereof to others without expressed authorisation are prohibited. Offenders will be held liable for payment of damages. All rights created by patent grant or registration of a utility model or design patent are reserved.

```
AND   (TCO >= C_TCO_MIN_FUP_EFP_CTL_DIAG)
AND   (TCO <= C_TCO_MAX_FUP_EFP_CTL_DIAG)
AND   (MFF_SP_EFP_CTL >= C_MFF_SP_MIN_FUP_EFP_CTL_DIAG)
AND   (MFF_SP_EFP_CTL <= C_MFF_SP_MAX_FUP_EFP_CTL_DIAG)
```

43.34.2.1 I controller out-of-range diagnosis (FUP_EFP_CTL_I)

Diagnosis of the I share of the EFP controller for out-of-range behaviour is done in this section.
A calibratable option (LC_FUP_EFP_CTL_I_ADD_AD_DIAG) is provided in order to perform the diagnosis only with I controller or with I controller along with the EFP controller adaptation.
The diagnosis when perfomed only with the I controller, considers the short term effects of only the I controller itself and if the controller value exceeds below or beyond a calibratable threshold, then the symptom for out-of-range is triggered. The error status is updated after anti-bounce filtering.
The diagnosis when perfomed with the I controller along with the EFP controller adaptation, considers also the long term effects due to the EFP controller adaptation. Filter clogging could be an example of a failure due to long term effects. If the controller plus the adaptation value exceeds below or beyond a calibratable threshold, then the symptom for out-of-range is triggered. The error status is updated after anti-bounce filtering.

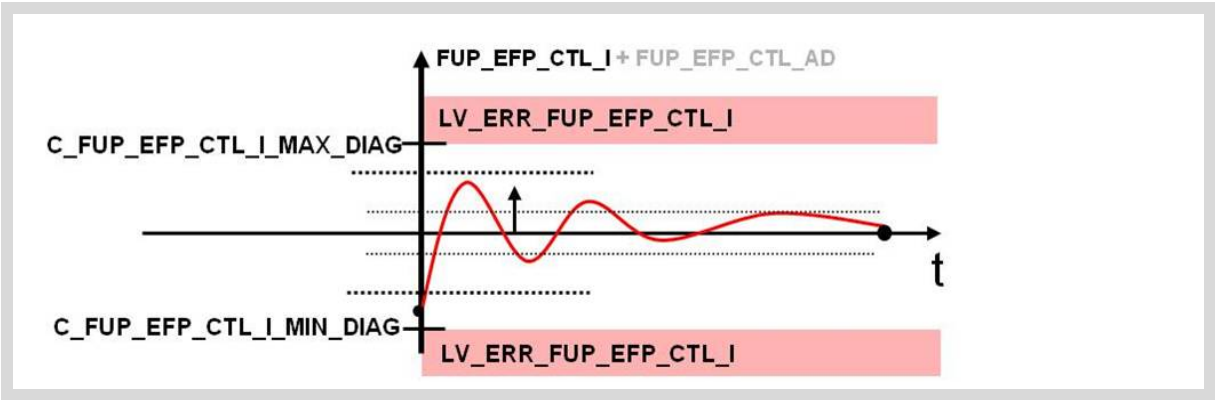

Figure 43.34.3:

Representation of I controller out-of-range diagnosis

Check of diagnostic condition :

```
bit 0 of LF_STATE_DGO_FUP_EFP_CTL_I = LV_CDN_DIAG_FUP_EFP_CTL
```

Symptom calculation :

```
IF(1)  bit 0 of LF_STATE_DGO_FUP_EFP_CTL_I
THEN(1)
      IF(2)  LC_FUP_EFP_CTL_I_ADD_AD_DIAG
      THEN(2)
        FUP_EFP_CTL_I_ADD_AD = FUP_EFP_CTL_I + FUP_EFP_CTL_AD
      ELSE(2)
        FUP_EFP_CTL_I_ADD_AD = FUP_EFP_CTL_I
      END(2)
      bit 1 of LF_STATE_DGO_FUP_EFP_CTL_I =
      ((FUP_EFP_CTL_I_ADD_AD < C_FUP_EFP_CTL_I_MIN_DIAG)
        OR (FUP_EFP_CTL_I_ADD_AD > C_FUP_EFP_CTL_I_MAX_DIAG))
END(1)

ACTION_ARSD_SetObds(NC_IDX_STD_FUP_EFP_CTL_I,
                    FUP_EFP_CTL_I_ADD_AD,
```

Copyright ©Continental AG. Transmittal, reproduction, dissemination and/or editing of this document as well as utilisation of its contents and communication thereof to others without expressed authorisation are prohibited. Offenders will be held liable for payment of damages. All rights created by patent grant or registration of a utility model or design patent are reserved.

```
                    C_FUP_EFP_CTL_I_ADD_AD_OBSD_BAS,
                    C_FUP_EFP_CTL_I_ADD_AD_OBSD_MIN,
                    C_FUP_EFP_CTL_I_ADD_AD_OBSD_MAX)
        //This ACTION calculates the standard value of the observed data
         depending on the actual value, the base value and the thresholds.  In

         addition, this ACTION checks the diagnosis condition and the
         anti-bounce counter if an error index is configured for the entry
         NC_IDX_STD_FUP_EFP_CTL_I
```

43.34.2.2 EFP controller adaptation out-of-range diagnosis (FUP_EFP_CTL_AD)

Diagnosis of the EFP controller adaptation for out-of-range behaviour is done in this section. When the EFP controller adaptation exceeds below or beyond a calibratable threshold, then the symptom for out-of-range is triggered. The error status is updated after anti-bounce filtering.

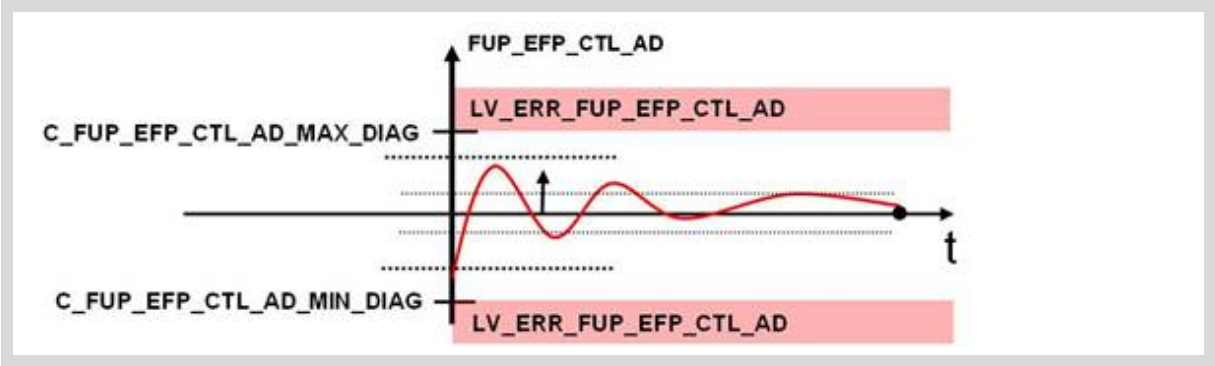

Figure 43.34.4:

Representation of EFP controller out-of-range diagnosis

Check of diagnostic condition :
bit 0 of LF_STATE_DGO_FUP_EFP_CTL_AD = LV_CDN_DIAG_FUP_EFP_CTL

Symptom calculation :

```
IF(1)  bit 0 of LF_STATE_DGO_FUP_EFP_CTL_AD
THEN(1)
    bit 1 of LF_STATE_DGO_FUP_EFP_CTL_AD =
    ((FUP_EFP_CTL_AD < C_FUP_EFP_CTL_AD_MIN_DIAG)
      OR  (FUP_EFP_CTL_AD > C_FUP_EFP_CTL_AD_MAX_DIAG))
END(1)

ACTION_ARSD_SetObds(NC_IDX_STD_FUP_EFP_CTL_AD,
                    FUP_EFP_CTL_AD,
                    C_FUP_EFP_CTL_AD_OBSD_BAS,
                    C_FUP_EFP_CTL_AD_OBSD_MIN,
                    C_FUP_EFP_CTL_AD_OBSD_MAX)
        //This ACTION calculates the standard value of the observed data
        depending on the actual value, the base value and the thresholds.  In

        addition, this ACTION checks the diagnosis condition and the
        anti-bounce counter if an error index is configured for the entry
        NC_IDX_STD_FUP_EFP_CTL_AD.
```

Copyright©Continental AG. Transmittal, reproduction, dissemination and/or editing of this document as well as utilisation of its contents and communication thereof to others without expressed authorisation are prohibited. Offenders will be held liable for payment of damages. All rights created by patent grant or registration of a utility model or design patent are reserved.

43.34.2.3 Controller deviation out-of-range diagnosis (FUP_EFP_CTL_DIF)

Diagnosis of the EFP controller deviation for out-of-range behaviour is done in this section. The controller deviation is perfomed in two ways. When the fuel pump pressure is too high compared to the set point and at the same time, the pump delivery is too low, or, when the fuel pump pressure is too low compared to the set point and at the same time, the pump delivery (EFPPWM) is too high, then there could exist an EFP controller deviation. But, this deviation is only confirmed after a certain calibratable time duration calculated via a local timer (T_ON_DLY_FUP_EFP_CTL_DIF). If the deviation exists even after the timer has expired, then the symptom for out-of-range is triggered. The error status is updated after anti-bounce filtering.

Check of diagnostic condition :

```
bit 0 of LF_STATE_DGO_FUP_EFP_CTL_DIF = LV_CDN_DIAG_FUP_EFP_CTL
```

Symptom calculation :

```
IF(1)  bit 0 of LF_STATE_DGO_FUP_EFP_CTL_DIF
THEN(1)
   bit 1 of LF_STATE_DGO_FUP_EFP_CTL_DIF =
     (
      ((FUP_EFP_DIF < C_FUP_EFP_CTL_DIF_MIN_DIAG)
        AND (EFPPWM < C_EFPPWM_CTL_DIF_MIN_DIAG))
      OR
      ((FUP_EFP_DIF > C_FUP_EFP_CTL_DIF_MAX_DIAG)
        AND (EFPPWM > C_EFPPWM_CTL_DIF_MAX_DIAG))
      )
   Calculation of turn-on delayed signal :
     IF(2)  bit 1 of LF_STATE_DGO_FUP_EFP_CTL_DIF
     THEN(2)
          IF(3)  T_ON_DLY_FUP_EFP_CTL_DIF > 0
          THEN(3)
               T_ON_DLY_FUP_EFP_CTL_DIF = T_ON_DLY_FUP_EFP_CTL_DIF - 0.02
          END(3)
     ELSE(2)
         T_ON_DLY_FUP_EFP_CTL_DIF = C_T_ON_DLY_FUP_EFP_CTL_DIF
     END(2)

     bit 1 of LF_STATE_DGO_FUP_EFP_CTL_DIF =
      (bit 1 of LF_STATE_DGO_FUP_EFP_CTL_DIF
        AND  (T_ON_DLY_FUP_EFP_CTL_DIF == 0))

ELSE(1)
   T_ON_DLY_FUP_EFP_CTL_DIF = C_T_ON_DLY_FUP_EFP_CTL_DIF
END(1)
```

Update of symptom status based on turn-on delay timer :

```
bit 0 of LF_STATE_DGO_FUP_EFP_CTL_DIF =
 ( bit 0 of LF_STATE_DGO_FUP_EFP_CTL_DIF
   AND  ((T_ON_DLY_FUP_EFP_CTL_DIF == 0)
         OR  (T_ON_DLY_FUP_EFP_CTL_DIF == C_T_ON_DLY_FUP_EFP_CTL_DIF))
  )
ACTION_ARSD_SetObds( NC_IDX_STD_FUP_EFP_CTL_DIF_0,
          FUP_EFP_DIF,
          C_FUP_EFP_DIF_OBSD_BAS,
          C_FUP_EFP_DIF_OBSD_MIN,
          C_FUP_EFP_DIF_OBSD_MAX)

ACTION_ARSD_SetObds(NC_IDX_STD_FUP_EFP_CTL_DIF_1,
          EFPPWM,
          C_EFPPWM_OBSD_BAS,
```

Copyright ©Continental AG. Transmittal, reproduction, dissemination and/or editing of this document as well as utilisation of its contents and communication thereof to others without expressed authorisation are prohibited. Offenders will be held liable for payment of damages. All rights created by patent grant or registration of a utility model or design patent are reserved.

C_EFPPWM_OBSD_MIN,
C_EFPPWM_OBSD_MAX)

//These ACTIONs calculate the standard value of the observed data depending on the actual value, the base value and the thresholds. In addition, this ACTION checks the diagnosis condition and the anti-bounce counter if an error index is configured for the entry NC_IDX_STD_FUP_FUP_EFP_CTL_DIF.

43.34.2.4 Diagnostic status update for low pressure control diagnosis (FUP_EFP_CTL)

The ACTION_ERRM_ResultDiag_(NC_IDX_ERR_XXX, LF_STATE_DGO_XXX, PRM_STATE_FIL) is the interface provided by error management (ERRM) which is used by the module to provide the diagnostics results to ERRM. NC_IDX_ERR_XXX represents the error indexes of the respective diagnosis (XXX) in the ECU memory. PRM_STATE_FIL represents the state of anti-bounce filter.
However, the display of the error status of the diagnosis can be observed via the LV_ERR_XXX, these variables can be found as visible in .a2l file.

I controller out-of-range diagnosis :
```
ACTION_ERRM_ResultDiag(NC_IDX_ERR_FUP_EFP_CTL_I,LF_STATE_DGO_FUP_EFP_CTL_I,)
```

Controller adaptation out-of-range diagnosis :
```
ACTION_ERRM_ResultDiag
(NC_IDX_ERR_FUP_EFP_CTL_AD,LF_STATE_DGO_FUP_EFP_CTL_AD,)
```

Controller deviation out-of-range diagnosis :
```
ACTION_ERRM_ResultDiag(NC_IDX_ERR_FUP_EFP_CTL_DIF,LF_STATE_DGO_FUP_EFP_CTL_DIF,)
```

43.34.3 Fuel low pressure out-of-range diagnoses (FUP_EFP_ORNG)

The fuel low pressure out-of-range diagnosis is done to check if the low pressure is above or below system limits. Two calibratable top limit diagnosis is possible.

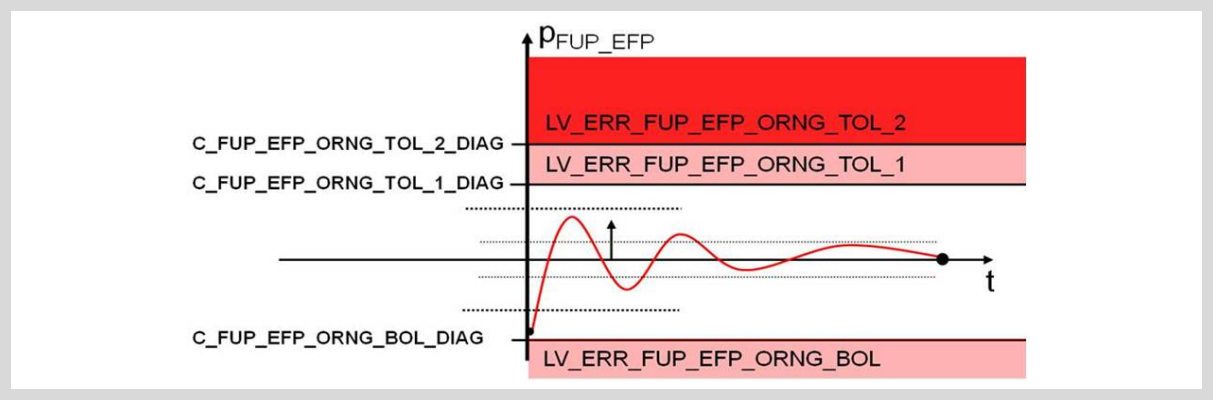

Figure 43.34.5:

Representation of fuel pressure out-of-range diagnosis

In addition to the common pre-condition for both low pressure control and out-of-range diagnosis, the fuel low pressure out-of-range diagnosis also consists of a common pre-condition for all the out-of-range diagnoses.

Copyright ©Continental AG. Transmittal, reproduction, dissemination and/or editing of this document as well as utilisation of its contents and communication thereof to others without expressed authorisation are prohibited. Offenders will be held liable for payment of damages. All rights created by patent grant or registration of a utility model or design patent are reserved.

The function identifier (NC_FID_ERR_FUP_EFP_ORNG) contains the calibrated error configuration in the Fault reaction manager (FARM). Existence of any errors which are configured to this function identifier will inhibit the diagnosis by setting the permission flag (LV_PRMS) to zero. Also, the diagnosis is only activated when the engine speed (N_32) is in the range of calibratable thresholds.

```
ACTION_FARM_GetPermission(NC_FID_ERR_FUP_EFP_ORNG, LV_PRMS_TMP)

LV_CDN_DIAG_FUP_EFP_ORNG =
  LV_CDN_DIAG_FUP_EFP_CTL_ORNG
  AND   LV_PRMS_TMP
  AND   (N_32 >= C_N_32_MIN_FUP_EFP_ORNG_DIAG)
  AND   (N_32 <= C_N_32_MAX_FUP_EFP_ORNG_DIAG)
```

43.34.3.1 Fuel low pressure out-of-range diagnoses (FUP_EFP_ORNG_BOL)

Diagnosis of the low pressure for out-of-range behaviour is done in this section. When the fuel pressure from the sensor is below a calibratable threshold then the symptom for out-of-range is triggered. The error status is updated after anti-bounce filtering.

Check of diagnostic condition :

```
bit 0 of LF_STATE_DGO_FUP_EFP_ORNG_BOL = LV_CDN_DIAG_FUP_EFP_ORNG
```

Symptom calculation :

```
IF(1)   LV_CDN_DIAG_FUP_EFP_ORNG
THEN(1)
  bit 1 of LF_STATE_DGO_FUP_EFP_ORNG_BOL = (FUP_EFP <
     C_FUP_EFP_ORNG_BOL_DIAG)
END(1)
```

43.34.3.2 Fuel low pressure out-of-range diagnoses (FUP_EFP_ORNG_TOL_1)

Diagnosis of the low pressure for out-of-range behaviour is done in this section. The TOL_1 refers to the calibratable limit for the fuel pressure at the pump outlet which triggers out-of-range diagnosis.
The error status is updated after anti-bounce filtering.

Check of diagnostic condition :

```
bit 0 of LF_STATE_DGO_FUP_EFP_ORNG_TOL_1 = LV_CDN_DIAG_FUP_EFP_ORNG
```

Symptom calculation :

```
IF(1)   LV_CDN_DIAG_FUP_EFP_ORNG
THEN(1)
   bit 1 of LF_STATE_DGO_FUP_EFP_ORNG_TOL_1 =
    (C_FUP_EFP_ORNG_TOL_2_DIAG >= FUP_EFP > C_FUP_EFP_ORNG_TOL_1_DIAG)
END(1)
```

43.34.3.3 Fuel low pressure out-of-range diagnoses (FUP_EFP_ORNG_TOL_2)

Diagnosis of the low pressure for out-of-range behaviour is done in this section. The TOL_2 refers to the calibratable limit for the fuel pressure at the pump outlet which triggers out-of-range diagnosis. TOL_2 is greater than TOL_1. In presence of an over-presure valve in the low pressure circuit, the TOL_2 error indicates the failure of the opening of the over-pressure valve in case of higher fuel pressures.
The error status is updated after anti-bounce filtering.

Check of diagnostic condition :

```
bit 0 of LF_STATE_DGO_FUP_EFP_ORNG_TOL_2 = LV_CDN_DIAG_FUP_EFP_ORNG
```

Symptom calculation :

```
IF(1)   LV_CDN_DIAG_FUP_EFP_ORNG
THEN(1)
  bit 1 of LF_STATE_DGO_FUP_EFP_ORNG_TOL_2 =
   (FUP_EFP > C_FUP_EFP_ORNG_TOL_2_DIAG)
END(1)
```

Copyright ©Continental AG. Transmittal, reproduction, dissemination and/or editing of this document as well as utilisation of its contents and communication thereof to others without expressed authorisation are prohibited. Offenders will be held liable for payment of damages. All rights created by patent grant or registration of a utility model or design patent are reserved.

43.34.3.4 Diagnostic status update for out-of-range diagnoses (FUP_EFP_ORNG)

The ACTION_ERRM_ResultDiag_(NC_IDX_ERR_XXX, LF_STATE_DGO_XXX, PRM_STATE_FIL) is the interface provided by error management (ERRM) which is used by the module to provide the diagnostics results to ERRM. NC_IDX_ERR_XXX represents the error indexes of the respective diagnosis (XXX) in the ECU memory. PRM_STATE_FIL represents the state of anti-bounce filter.
However, the display of the error status of the diagnosis can be observed via the LV_ERR_XXX, these variables can be found as visible in .a2l file.

TOL_2 diagnosis :

```
ACTION_ERRM_ResultDiag(NC_IDX_ERR_FUP_EFP_ORNG_TOL_2,
LF_STATE_DGO_FUP_EFP_ORNG_TOL_2,)
```

TOL_1 diagnosis :

```
ACTION_ERRM_ResultDiag(NC_IDX_ERR_FUP_EFP_ORNG_TOL_1,
LF_STATE_DGO_FUP_EFP_ORNG_TOL_1,)
```

BOL diagnosis :

```
ACTION_ERRM_ResultDiag(NC_IDX_ERR_FUP_EFP_ORNG_BOL,
LF_STATE_DGO_FUP_EFP_ORNG_BOL,)
```

43.34.4 Diagnostics management

When there is a clearing of failure memory via calibration (CLR event) or when there is a start of a new driving cycle (REST event), the diagnostic data are reset in order to start a new evaluation of the diagnosis.
This reset is triggered in the error management (ERRM) via an ACTION interface provided by the module, in this module, it is ACTION_FUSL_ResetDiagEfpCtlDif.

Also, at the Clear 'CLR' and Restart 'REST' events, the following initialization is done,

```
T_ON_DLY_FUP_EFP_CTL_DIF = C_T_ON_DLY_FUP_EFP_CTL_DIF
```

Copyright ©Continental AG. Transmittal, reproduction, dissemination and/or editing of this document as well as utilisation of its contents and communication thereof to others without expressed authorisation are prohibited. Offenders will be held liable for payment of damages. All rights created by patent grant or registration of a utility model or design patent are reserved.

43.35 FUSL rate based monitoring interface

Data Definition

Name	Mode	Coded Limits	Display Limits	Resolution	Unit
LV_T_MIN_CH_CST_FUP	O/V	0... 1H	0 ...1	1	-
Minimum time in catalyst heating reached for denomination FUP_CH					
STATE_RBM_FUP_CH_H	V	0... FFH	0... 255	1	-
Interface of FUP_CH_H monitor with the Rate-Based Monitoring statistics					
STATE_RBM_FUP_CH_L	V	0... FFH	0... 255	1	-
Interface of FUP_CH_L monitor with the Rate-Based Monitoring statistics					
T_CH_CST_FUP	V	0... FFFFH	0... 6553.5	0.1	s
Accumulated time counted down since the activation of cold start catalyst heating for the active driving cycle					

Input Data

LV_FID_READY {p. 11388}	LV_IGK {p. 24082}	LV_ST_END {p. 7530}	NC_IDX_ERR_FUP_CH_H {p. 12218}
NC_IDX_ERR_FUP_CH_L {p. 12218}	STATE_CH {p. 10962}		

Calibration Data

Name	Mode	Coded Limits	Display Limits	Resolution	Unit
C_T_CH_CST_FUP	V	0... FFFFH	0... 6553.5	0.1	s
Initial value of accumulated time counted down since the activation of cold start catalyst heating for the active driving cycle					

Configuration Data

Name	Mode	Coded Limits	Display Limits	Resolution	Unit
NC_FID_RBM_FUP_CH_H	-	0... FFFFH	0... 65535	1	-
FUP_CH_H monitor in-use performance calculation allowed					
NC_FID_RBM_FUP_CH_L	-	0... FFFFH	0... 65535	1	-
FUP_CH_L monitor in-use performance calculation allowed					
NC_IDX_RBM_FUP_CH_H	-	0... FFH	0... 255	1	-
Diagnostic index for rate-based monitoring					
NC_IDX_RBM_FUP_CH_L	-	0... FFH	0... 255	1	-
Diagnostic index for rate-based monitoring					

Action Definitions

Copyright ©Continental AG. Transmittal, reproduction, dissemination and/or editing of this document as well as utilisation of its contents and communication thereof to others without expressed authorisation are prohibited. Offenders will be held liable for payment of damages. All rights created by patent grant or registration of a utility model or design patent are reserved.

ACTION_FUSL_IniRbmFupChH(IN <PRM_TYP_INI>, **IN** <PRM_NR_CONF>)					**Mode: O**
This action is called by ERRM aggregate to force a new evaluation of rate-based monitoring data of diagnosis or to remove rate-based monitoring inhibition related to system fault.					
Parameter	**Type**	**Hex.Limits**	**Phys.Limits**	**Resol.**	**Unit**
PRM_TYP_INI	in	0H 1H	CLR REST	-	-
Type of initialisation (Restart: REST, Mode $04: CLR)					
PRM_NR_CONF	in	0... FFH	0... 255	1	-
Additional configuration information (may be not used)					

ACTION_FUSL_IniRbmFupChL(IN <PRM_TYP_INI>, **IN** <PRM_NR_CONF>)					**Mode: O**
This action is called by ERRM aggregate to force a new evaluation of rate-based monitoring data of diagnosis or to remove rate-based monitoring inhibition related to system fault.					
Parameter	**Type**	**Hex.Limits**	**Phys.Limits**	**Resol.**	**Unit**
PRM_TYP_INI	in	0H 1H	CLR REST	-	-
Type of initialisation (Restart: REST, Mode $04: CLR)					
PRM_NR_CONF	in	0... FFH	0... 255	1	-
Additional configuration information (may be not used)					

Import actions:

ACTION_ERRM_GetEndDiag(IN <PRM_IDX_ERR>, **OUT** <PRM_LV_END_DIAG>)
ACTION_ERRM_IncRbmMonitorDenFor(IN <PRM_IDX_RBM>)
ACTION_ERRM_IncRbmMonitorNumFor(IN <PRM_IDX_RBM>)
ACTION_ERRM_LockRbmMonitorFor(IN <PRM_IDX_RBM>)
ACTION_FARM_GetPermission(IN <PRM_FID>, **OUT** <PRM_LV_PRMS>)

General Information

To gain more information about the monitoring performance under real world conditions, CARB requires to implement software algorithms to track and report in-use performance emission relevant monitors in a standardized format.
RBM or Rate Based Monitoring is a mandatory CARB requirement. RBM is the ratio of number of times a diagnosis has run successfully (numerator counter) to the number of relevant driving cycles (denominator counter). CARB monitors this ratio in order to quantitatively measure the strength of the diagnostic strategy of any system.
When a diagnosis is completed fully in a valid driving cycle, then both the numerator and denominator are incremented once. If the diagnosis does not run completely in the driving cycle, then only the denominator is incremented and the numerator is not incremented.

All the RBM monitoring calculations are handled internally by the Error Management aggregate (ERRM).

Interface between monitors and rate-based monitoring functionality is realized with these actions :

ACTION_ERRM_IncRbmMonitorNumFor (IN <PRM_IDX_RBM>)
This action is used by diagnostics requiring Rate-Based Monitoring (IUPR) to notify ERRM that diagnostic conditions were met long enough to detect malfunction - -> numerator is incremented

Copyright ©Continental AG. Transmittal, reproduction, dissemination and/or editing of this document as well as utilisation of its contents and communication thereof to others without expressed authorisation are prohibited. Offenders will be held liable for payment of damages. All rights created by patent grant or registration of a utility model or design patent are reserved.

ACTION_ERRM_IncRbmMonitorDenFor (IN <PRM_IDX_RBM>)
This action is used by diagnostics requiring Rate-Based Monitoring (IUPR) to notify ERRM that Monitor individual conditions were encountered within this driving cycle - -> denominator is incremented

ACTION_ERRM_LockRbmMonitorFor (IN <PRM_IDX_RBM>)
This action is used by diagnostics requiring Rate-Based Monitoring (IUPR) to notify ERRM that diagnostic is disabled because of system malfunction - -> numerator/denominator can not be incremented till the end of the driving cycle

▶ Application Conditions

Initialisation:

```
on Reset:
LV_T_MIN_CH_CST_FUP = 0
T_CH_CST_FUP = C_T_CH_CST_FUP //[s]
```

Activation: `always`

Deactivation: `never`

Recurrence:

```
subfunction 1.1.1:  100ms
subfunction 1.1.2:  1s
subfunction 1.1.3:  1s
```

▶ Function Description

Note :
STATE_RBM_XX is the interface variable between the aggregate and ERRM.
bit 0 of STATE_RBM_XX updates the numerator value
bit 1 of STATE_RBM_XX locks the RBM
bit 2 of STATE_RBM_XX updates the denominator value

The function identifier (NC_FID_RBM_XX) contains the calibrated error configuration in the Fault reaction manager (FARM). Existence of any errors which are configured to this function identifier will lock the RBM by setting the permission flag (LV_PRMS) to zero.

NC_IDX_RBM_XX is the diagnostic index for the respective RBM instance XX.

Every RBM instance is related to a particular diagnostic. RBM instances are realized for several aggregates.

The FUSL RBM instances are separated into,

1. Standard RBM instances
   - use standard conditions to set bit 0 (RBM numerator) and bit 2 (denominator) of STATE_RBM_XX
   - are managed centralized inside ERRM (defined in table of failures)
   - one RBM instance per symptom is mandatory
   - applied for following FUSL RBM instances
     - Fuel pressure damper diagnosis - FUP_EFP_DAMP
     - Fuel pressure plausibility diagnosis (High/Low) - FUP_MFP_PLAUS_H/_L
     - High pressure system diagnosis (Top/Bottom limits) - H_PRS_SYS_BOL_1/_TOL_1/_TOL_2
     - FUP_SENS_PLAUS_PUMP/_SENS
     - Fuel pressure out of range diagnosis (Top/Bottom limits) - FUP_ORNG_BOL_1/_TOL_1/_TOL_2
     - EFPPWM_PLAUS_AD_INT_PART/_AD_MIN/_INT_PART
     - L_PRS_SYS_BOL_1/_TOL_1/_TOL_2

However, this interface modules does not contain the RBM calculation for the standard RBM instances.

2. Specific RBM instances

Copyright ©Continental AG. Transmittal, reproduction, dissemination and/or editing of this document as well as utilisation of its contents and communication thereof to others without expressed authorisation are prohibited. Offenders will be held liable for payment of damages. All rights created by patent grant or registration of a utility model or design patent are reserved.

- use specific conditions to set bit 0 (RBM numerator) and/or bit 2 (RBM denominator) of STATE_RBM_XX
- are managed centralized inside FUSL (defined in this module)
- one RBM instance per symptom or per failure is allowed
- applied for following FUSL RBM instances
-
    - Fuel pressure diagnosis during Catalyst heating (High/Low) - FUP_CH_H/_L

Copyright ©Continental AG. Transmittal, reproduction, dissemination and/or editing of this document as well as utilisation of its contents and communication thereof to others without expressed authorisation are prohibited. Offenders will be held liable for payment of damages. All rights created by patent grant or registration of a utility model or design patent are reserved.

43.35.1 RBM for Fuel pressure diagnosis during catalyst heating (FUP_CH)

Monitoring of the fuel pressure needs to be done during catalyst heating in order to ensure the optimal injection pressures for heating the catalyst.
If during catalyst heating, the fuel pressure deviation stays above a defined calibrated threshold for a definite (calibrated) time, the fuel pressure deviation error due to fuel pressure too low during catalyst heating is set (FUP_CH_L).
If during catalyst heating, the fuel pressure deviation stays below a defined calibrated threshold for a definite (calibrated) time, the fuel pressure deviation error due to fuel pressure too high error during catalyst heating is set (FUP_CH_H).

43.35.1.1 Specific RBM denominator condition used for FUP_CH_H and FUP_CH_L in common

The specific condition to set RBM denominator for both RBM instances FUP_CH_H and FUP_CH_L is calculated here as required by CSERS (cold start emission requirement strategy) regulation.
In order to increment the RBM numerator for the FUP_CH diagnoses, a minimum calibratable time (C_T_CH_CST_FUP) has to be passed after engine has exited the start phase. This is to ensure that the catalyst heating has been initiated before for the diagnosis is triggered and so that the fuel pressure control is running in closed loop.

```
IF(1)    LV_IGK == 1
          AND LV_ST_END == 1
          AND bit 2 of STATE_RBM_FUP_CH_L == 0
          AND bit 2 of STATE_RBM_FUP_CH_H == 0
THEN(1)                                                    // Timer ready

         IF(2)    (STATE_CH == 'CH_AST') AND (T_CH_CST_FUP > 0)
         THEN(2)
                 T_CH_CST_FUP = T_CH_CST_FUP - 0.1         // Timer go [s]
         ENDIF(2)
ELSE(1)  T_CH_CST_FUP = C_T_CH_CST_FUP                     // Timer reset
ENDIF(1)

LV_T_MIN_CH_CST_FUP = (T_CH_CST_FUP == 0)                  // Timer evaluate
```

43.35.1.2 Call RBM interface for FUP_CH_H

The simplified signal flow of the below algorithm is as follows,

If RBM is inhibited through NC_FID_RBM_FUP_CH_H
Then Lock RBM of FUP_CH_H
Else Enable RBM of FUP_CH_H
Endif

If RBM of FUP_CH_H is enabled
Then

```
    if    LV_END_DIAG_FUP_CH_H = 1  then Increment RBM numerator       // End of diagnosis
    if    LV_T_MIN_CH_CST_FUP = 1   then Increment RBM denominator     // Timer is zero
Endif
```

Algorithm :

```
IF(1) LV_FID_READY == 1
THEN(1)

    // Monitor disablement because of system malfunction
    IF(2)  bit 1 of STATE_RBM_FUP_CH_H == 0
    THEN(2)
         ACTION_FARM_GetPermission(NC_FID_RBM_FUP_CH_H, PRM_LV_PRMS)
         IF(3) PRM_LV_PRMS == 0
         THEN(3)
               bit 1 of STATE_RBM_FUP_CH_H = 1
               ACTION_ERRM_LockRbmMonitorFor(NC_IDX_RBM_FUP_CH_H)
         ENDIF(3)
    ENDIF(2)

    IF(2)  bit 1 of STATE_RBM_FUP_CH_H == 0
    THEN(2)
         // Conditions for monitoring met long enough to detect malfunction
         IF(3) bit 0 of STATE_RBM_FUP_CH_H == 0
         THEN(3)
               ACTION_ERRM_GetEndDiag(NC_IDX_ERR_FUP_CH_H, PRM_LV_END_DIAG)
               IF(4)  PRM_LV_END_DIAG == 1
               THEN(4)
                      bit 0 of STATE_RBM_FUP_CH_H == 1
                      ACTION_ERRM_IncRbmMonitorNumFor(NC_IDX_RBM_FUP_CH_H)
               ENDIF(4)
         ENDIF(3)
         // Additional individual requirements
         IF(3) bit 2 of STATE_RBM_FUP_CH_H == 0
         THEN(3)
               IF(4)  LV_T_MIN_CH_CST_FUP == 1
               THEN(4)
                      bit 2 of STATE_RBM_FUP_CH_H = 1
                      ACTION_ERRM_IncRbmMonitorDenFor(NC_IDX_RBM_FUP_CH_H)
               ENDIF(4)
         ENDIF(3)
    ENDIF(2)
ENDIF(1)
```

Copyright ©Continental AG. Transmittal, reproduction, dissemination and/or editing of this document as well as utilisation of its contents and communication thereof to others without expressed authorisation are prohibited. Offenders will be held liable for payment of damages. All rights created by patent grant or registration of a utility model or design patent are reserved.

43.35.1.3 Call RBM interface for FUP_CH_L

The simplified signal flow of the below algorithm is as follows,

If RBM is inhibited through NC_FID_RBM_FUP_CH_L
Then Lock RBM of FUP_CH_L
Else Enable RBM of FUP_CH_L
Endif

If RBM of FUP_CH_L is enabled
Then
if LV_END_DIAG_FUP_CH_L = 1 then Increment RBM numerator // End of diagnosis
if LV_T_MIN_CH_CST_FUP = 1 then Increment RBM denominator // Timer is zero
Endif

Algorithm :

```
IF(1)  LV_FID_READY == 1
THEN(1)

    // Monitor disablement because of system malfunction
    IF(2)  bit 1 of STATE_RBM_FUP_CH_L == 0
    THEN(2)
          ACTION_FARM_GetPermission(NC_FID_RBM_FUP_CH_L, PRM_LV_PRMS)
          IF(3) PRM_LV_PRMS == 0
          THEN(3)
                bit 1 of STATE_RBM_FUP_CH_L = 1
                ACTION_ERRM_LockRbmMonitorFor(NC_IDX_RBM_FUP_CH_L)
          ENDIF(3)
    ENDIF(2)

    IF(2)  bit 1 of STATE_RBM_FUP_CH_L == 0
    THEN(2)
         // Conditions for monitoring met long enough to detect malfunction
          IF(3) bit 0 of STATE_RBM_FUP_CH_L == 0
          THEN(3)
                ACTION_ERRM_GetEndDiag(NC_IDX_ERR_FUP_CH_L,PRM_LV_END_DIAG)
                IF(4)  PRM_LV_END_DIAG == 1
                THEN(4)
                       bit 0 of STATE_RBM_FUP_CH_L == 1
                       ACTION_ERRM_IncRbmMonitorNumFor(NC_IDX_RBM_FUP_CH_L)
                ENDIF(4)
          ENDIF(3)

          // Additional individual requirements
          IF(3) bit 2 of STATE_RBM_FUP_CH_L == 0
          THEN(3)
                IF(4)  LV_T_MIN_CH_CST_FUP == 1
                THEN(4)
                       bit 2 of STATE_RBM_FUP_CH_L = 1
                       ACTION_ERRM_IncRbmMonitorDenFor(NC_IDX_RBM_FUP_CH_L)
                ENDIF(4)
          ENDIF(3)
    ENDIF(2)
ENDIF(1)
```

Copyright ©Continental AG. Transmittal, reproduction, dissemination and/or editing of this document as well as utilisation of its contents and communication thereof to others without expressed authorisation are prohibited. Offenders will be held liable for payment of damages. All rights created by patent grant or registration of a utility model or design patent are reserved.

43.35.2 ACTION_FUSL_IniRbmFupChH

```
If PRM_TYP_INI = 'REST'
Then
  STATE_RBM_FUP_CH_H = 0
Else
  bit 1 of STATE_RBM_FUP_CH_H = 0
Endif
```

At Reset event, the STATE_RBM_FUP_CH_H is initialized to zero through the action call.

43.35.3 ACTION_FUSL_IniRbmFupChL

```
If PRM_TYP_INI = 'REST'
Then
  STATE_RBM_FUP_CH_L = 0
Else
  bit 1 of STATE_RBM_FUP_CH_L = 0
Endif
```

At Reset event, the STATE_RBM_FUP_CH_L is initialized to zero through the action call.

Copyright ©Continental AG. Transmittal, reproduction, dissemination and/or editing of this document as well as utilisation of its contents and communication thereof to others without expressed authorisation are prohibited. Offenders will be held liable for payment of damages. All rights created by patent grant or registration of a utility model or design patent are reserved.

43.36 Fuel research octane number diagnosis

Data Definition

Name	Mode	Coded Limits	Display Limits	Resolution	Unit
CTR_ERR_LOW_RON	O/V/S	0... FFH	0... 255	1	-
Statistical error counter for low research octane number (RON) diagnosis					
LF_STATE_DGO_LOW_RON	-	0... FFFFH	0... 65535	1	-
This parameter indicates the state of low research octane number (RON) diagnostic - bit0 (CDN) : 1=condition true - bit1 (SYM) : 1=symptom active - bit2 (NO_VLD) : 1=diagnostic output not valid					
LV_SYM_LOW_RON_NVMY	V/S	0... 1H	0 ...1	1	-
Sympton low research octane number (RON) detected					
STATE_FIL_LOW_RON	V	0H 1H 2H 3H	NO_EVE PASS FAIL INTM	-	-
Debounced result of low research octane number (RON) diagnosis					
STATE_RON_OLD	O/V	0H 1H 2H 3H	RON_OK LOW_RON_DETECTED LOW_RON_CONFIRMED RON_OUT_OF_RANGE	-	-
Fuel RON quality after last refuel, old value					

Input Data

LV_LOW_RON_DET_ENA {p. 12184}	LV_ST_END {p. 7530}	STATE_RON {p. 12128}	

Calibration Data

Name	Mode	Coded Limits	Display Limits	Resolution	Unit
C_STATE_RON_THD_MAX	-	0H 1H 2H 3H	RON_OK LOW_RON_DETECTED LOW_RON_CONFIRMED RON_OUT_OF_RANGE	-	-
Maximum threshold for detected research octane number (RON)					

Configuration Data

Name	Mode	Coded Limits	Display Limits	Resolution	Unit
NC_IDX_ERR_LOW_RON	-	1... FFFFH	1... 65535	1	-
Low research octane number research octane number (RON) diagnosis					

Copyright ©Continental AG. Transmittal, reproduction, dissemination and/or editing of this document as well as utilisation of its contents and communication thereof to others without expressed authorisation are prohibited. Offenders will be held liable for payment of damages. All rights created by patent grant or registration of a utility model or design patent are reserved.

Action Definitions

ACTION_FUSL_ResetDiagLowRon(IN <PRM_STATE_INI>, **OUT** <PRM_NR_CONF>)					**Mode: O**
Action to clear or restart the low RON diagnosis					
Parameter	**Type**	**Hex.Limits**	**Phys.Limits**	**Resol.**	**Unit**
PRM_STATE_INI	in	0H 1H	CLR REST	-	-
Type of initialization to manage splitting of diagnostic initialization					
PRM_NR_CONF	out	0... FFH	0... 255	1	-
Additional Configuration Information for the action					

Import actions:

ACTION_ERRM_ResultDiag(IN <PRM_IDX_ERR>, **IN** <PRM_STATE_DGO>, **OUT** <PRM_STATE_FIL>)

Error treatment

Diagnostic Identifier	**Diagnostic initialization function**	**NR_CONF**	**CARB class**	**OBD DTC**
Diagnostic description				
NC_IDX_ERR_LOW_RON	ACTION_FUSL_ResetDiagLowRon	-	CC	
Low research octane number research octane number (RON) diagnosis				

Definition of the behavior of the initialization				
ERR-Flag		**Reset at ECU Reset**	**reset at Key ON**	**Latch error on fail**
		NO	NO	NO
ABC	**ABC-class**	**MAX-INC after Failure**	**No Reset at NEWDC**	**Init on Condition Loss**
	ABC	NO	NO	NO
Description of the implementation				
	prestore FRF	**RBM**	**Similar conditions**	
	-	NO		

General Information

The purpose of this diagnostic is to provide failure information in case low research octane number (RON) was detected by STATE_RON.

Appendix to Error treatment:

Inhibited by FIDs:

Copyright ©Continental AG. Transmittal, reproduction, dissemination and/or editing of this document as well as utilisation of its contents and communication thereof to others without expressed authorisation are prohibited. Offenders will be held liable for payment of damages. All rights created by patent grant or registration of a utility model or design patent are reserved.

Diagnostic instance	FID	Type
NC_IDX_ERR_LOW_RON	-	-

▶ Application Conditions

Initialisation:

```
At NVMSTO: store CTR_ERR_LOW_RON, LV_SYM_LOW_RON_NVMY,
At NVMRES: read CTR_ERR_LOW_RON, LV_SYM_LOW_RON_NVMY,
At NVMINI: CTR_ERR_LOW_RON        = 0
           LV_SYM_LOW_RON_NVMY    = 0

At RST:    STATE_RON_OLD = STATE_RON
```

Activation: `LV_ST_END == 1`

Deactivation: `If activation condition is not true`

Recurrence: `SEG`

▶ Function Description

```
IF    (STATE_RON >= C_STATE_RON_THD_MAX)
THEN LV_SYM_LOW_RON_NVMY = 1
ELSE LV_SYM_LOW_RON_NVMY = 0
ENDIF

% Diagnostic condition calculation:
bit 0 of LF_STATE_DGO_LOW_RON = (LV_LOW_RON_DET_ENA == 1)

% Symptom detection:
bit 1 of LF_STATE_DGO_LOW_RON = LV_SYM_LOW_RON_NVMY

% Symptom filtering:
ACTION_ERRM_ResultDiag (NC_IDX_ERR_LOW_RON, LF_STATE_DGO_LOW_RON,
                        STATE_FIL_LOW_RON)

% Auxilliary calculations:
IF     STATE_RON_OLD <> 3h                  'not RON_OUT_OF_RANGE'
AND    STATE_RON == 3h                     'RON_OUT_OF_RANGE'
THEN   CTR_ERR_LOW_RON = CTR_ERR_LOW_RON + 1
ENDIF

STATE_RON_OLD = STATE_RON
```

43.36.1 ACTION_FUSL_ResetDiagLowRon

```
% Management of Clear 'CLR' and Restart 'REST' events

LV_SYM_LOW_RON_NVMY = 0
```

Copyright ©Continental AG. Transmittal, reproduction, dissemination and/or editing of this document as well as utilisation of its contents and communication thereof to others without expressed authorisation are prohibited. Offenders will be held liable for payment of damages. All rights created by patent grant or registration of a utility model or design patent are reserved.