OXFORD

INTERNATIONAL
AQA EXAMINATIONS

INTERNATIONAL A-LEVEL
PHYSICS
PH05

Unit 5 Physics in practice

Mark scheme

January 2019

Version: 1.0 Final

I91XPH05/MS

Mark schemes are prepared by the Lead Assessment Writer and considered, together with the relevant questions, by a panel of subject teachers. This mark scheme includes any amendments made at the standardisation events which all associates participate in and is the scheme which was used by them in this examination. The standardisation process ensures that the mark scheme covers the students' responses to questions and that every associate understands and applies it in the same correct way. As preparation for standardisation each associate analyses a number of students' scripts. Alternative answers not already covered by the mark scheme are discussed and legislated for. If, after the standardisation process, associates encounter unusual answers which have not been raised they are required to refer these to the Lead Assessment Writer.

It must be stressed that a mark scheme is a working document, in many cases further developed and expanded on the basis of students' reactions to a particular paper. Assumptions about future mark schemes on the basis of one year's document should be avoided; whilst the guiding principles of assessment remain constant, details will change, depending on the content of a particular examination paper.

Further copies of this mark scheme are available from aqa.org.uk

Copyright © 2019 Oxford International AQA Examinations and its licensors. All rights reserved.

Level of response marking instructions

Level of response mark schemes are broken down into levels, each of which has a descriptor. The descriptor for the level shows the average performance for the level. There are marks in each level.

Before you apply the mark scheme to a student's answer read through the answer and annotate it (as instructed) to show the qualities that are being looked for. You can then apply the mark scheme.

Step 1 Determine a level

Start at the lowest level of the mark scheme and use it as a ladder to see whether the answer meets the descriptor for that level. The descriptor for the level indicates the different qualities that might be seen in the student's answer for that level. If it meets the lowest level then go to the next one and decide if it meets this level, and so on, until you have a match between the level descriptor and the answer. With practice and familiarity you will find that for better answers you will be able to quickly skip through the lower levels of the mark scheme.

When assigning a level you should look at the overall quality of the answer and not look to pick holes in small and specific parts of the answer where the student has not performed quite as well as the rest. If the answer covers different aspects of different levels of the mark scheme you should use a best fit approach for defining the level and then use the variability of the response to help decide the mark within the level, ie if the response is predominantly level 3 with a small amount of level 4 material it would be placed in level 3 but be awarded a mark near the top of the level because of the level 4 content.

Step 2 Determine a mark

Once you have assigned a level you need to decide on the mark. The descriptors on how to allocate marks can help with this. The exemplar materials used during standardisation will help. There will be an answer in the standardising materials which will correspond with each level of the mark scheme. This answer will have been awarded a mark by the Lead Examiner. You can compare the student's answer with the example to determine if it is the same standard, better or worse than the example. You can then use this to allocate a mark for the answer based on the Lead Examiner's mark on the example.

You may well need to read back through the answer as you apply the mark scheme to clarify points and assure yourself that the level and the mark are appropriate.

Indicative content in the mark scheme is provided as a guide for examiners. It is not intended to be exhaustive and you must credit other valid points. Students do not have to cover all of the points mentioned in the Indicative content to reach the highest level of the mark scheme.

An answer which contains nothing of relevance to the question must be awarded no marks.

Question	Marking guidance	Mark	Comments
01.1	91.08 ✓ 0.05 ✓	2	Exact answers only
01.2	12.01 0.11 ✓	1	Both answers required
01.3	n = 1.52 ✓	1	Accept 2 or 3 sf only
01.4	Attempt to calculate and/or add percentage uncertainties ✓ Uncertainty = ± 2.2% ✓	2	Do not accept addition of absolute uncertainties. Accept 1 or 2 sf only
01.5	Percentage uncertainties reduced ✓ ... because t is larger and absolute uncertainties are unchanged ✓	2	owtte

Question	Marking guidance	Mark	Comments
02.1	Well drawn smooth curve passing through or near to all the plotted points with an even scatter of the points about the line ✓	1	
02.2	Accurate values for F taken from the best-fit line at $0.10\ \mathrm{m}$ and $0.25\ \mathrm{m}$ + evidence of data extraction from graph ✓ Answer in the range 9.0 to 11 ✓	2	
02.3	Attempt to estimate the area under the graph between ΔL = $0.10\ \mathrm{m}$ and ΔL = $0.25\ \mathrm{m}$ or uses average force x change in extension ✓ Answer in the range $0.33\ \mathrm{J}$ to $0.35\ \mathrm{J}$ ✓	2	No sf penalty

Question	Marking guidance	Mark	Comments
03.1	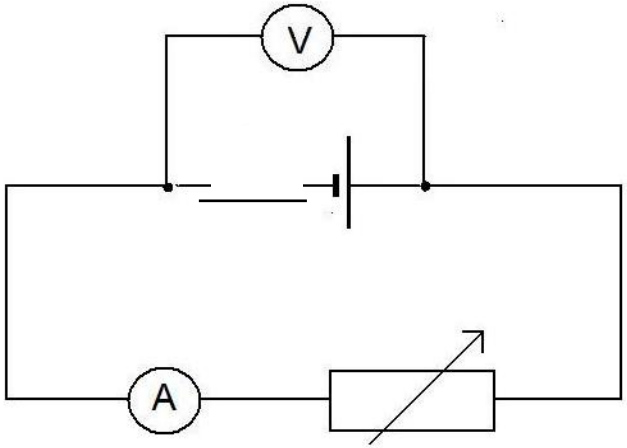	1	accept any equivalent circuit such as measurement of V for known values of R (plot 1/R against 1/V with intercept as –1/r and gradient E/r) OR measurement of I for known values of R (plot 1/I against R with gradient 1/E and intercept r/E) condone use of battery instead of cell Accept non-variable resistor for this mark
03.2	Makes appropriate measurements for candidate's circuit ✓ … for at least 5 different sets of values with a means of varying V ✓ Suitable range of values specified ✓ Appropriate graph specified ✓ How to extract ε from the graph ✓ How to extract r from the graph ✓ Repeats and averages the measurements ✓ ANY 5	5	Expect V and I but accept others as in 03.1 Eg 0.2 V to 1.2 V Accept correct means of calculating from minimum of 2 different data sets for method of determining ε and r Variables to be repeated and averaged must be specified. i.e not just "repeat results"

Question	Marking guidance	Mark	Comments
03.3	ε is unchanged or independent of n ✓ r is proportional to $\frac{1}{n}$ ✓	2	owtte

<table>
<tr><th>Question</th><th>Marking guidance</th><th>Mark</th><th>Comments</th></tr>
<tr><td>04.1</td><td>Take natural logs of both sides
$\therefore \ln R = \ln A + B/T$ ✓</td><td>1</td><td>Must see more than simply writing out the equation. Eg
$\ln e^{\frac{B}{T}} = \frac{B}{T}$</td></tr>
<tr><td>04.2</td><td>
<table>
<tr><th>T / K</th><th>$\frac{1}{T}$ / × 10^{-3} K^{-1}</th><th>R / Ω</th><th>ln(R / Ω)</th></tr>
<tr><td>258</td><td>3.876</td><td>146</td><td>4.984</td></tr>
<tr><td>273</td><td>3.663</td><td>97</td><td>4.575 (or 4.75)</td></tr>
<tr><td>288</td><td>3.472</td><td>64</td><td>4.159</td></tr>
<tr><td>303</td><td>3.300</td><td>46</td><td>3.829</td></tr>
<tr><td>318</td><td>3.145 (or 3.14)</td><td>31</td><td>3.434</td></tr>
<tr><td>333</td><td>3.003</td><td>24</td><td>3.178</td></tr>
<tr><td></td><td>✓</td><td></td><td>✓</td></tr>
</table>
</td><td>2</td><td>One mark for each correct column

Accept 3 or 4 sf in each column but significant figures must be consistent within each column</td></tr>
<tr><td>04.3</td><td>Sensible scale with appropriate label/unit marked on both axes ✓
Five points accurately plotted ✓
Six points accurately plotted ✓
Well drawn straight line of best fit ✓</td><td>4</td><td>The line of best fit should follow the trend of the points with an even scatter of points on either side of the line.</td></tr>
<tr><td>04.4</td><td>Large triangle used to find the gradient of the line of best fit ✓
Value of B in the range 2.0×10^3 to 2.2×10^3 ✓
Unit for B = K ✓</td><td>3</td><td>Use of triangle or guidelines required (condone use of dots on the line where consistent with their data values)
2 or 3 sf only</td></tr>
</table>

Question	Marking guidance	Mark	Comments
04.5	ln$R$ for 3.57×10^{-3} K^{-1} and for 3.33×10^{-3} K^{-1} read correctly from the graph ✓ At least 1 value of resistance found correctly ✓ Answer in the range (–) 1.5 to 2.0 ✓	3	Expect values of logarithms of approximately 4.37 and 3.87 respectively Expect values of resistance of approximately 79 Ω and 48Ω respectively
04.6	Credit up to **two** valid points such as • reference to a suitable temperature in °C for the thermometer • commenting on the sensitivity of the thermistor to temperature changes with reference to the answer to question 04.5 • comment about the nonlinear relationship between temperature and resistance ✓✓	2	

Question	Marking guidance	Mark	Comments
05.1	When gas is heated U or Q is positive ✓ W work is done by the gas (as it expands) OR W is negative ✓ Q is negative or gas heats the surroundings (as it escapes) (since gas is at higher temperature the surroundings) ✓ Not possible to deduce final change in ΔU (since values of W and Q are not known) ✓	3	
05.2	Uses $pV = nRT$ and the Avogadro number OR $pV = NkT$ ✓ Converts temperature to Kelvin correctly ✓ 3.3×10^{17} or 3.29×10^{17}✓	3	Substitution or rearrangement constitute use of the equations
05.3	it's an ideal gas ✓	1	
05.4	When evacuated there is less problem or no problem with: sound waves disturbing the mirrors (since sound cannot travel in a vacuum ✓ convection currents disturbing the mirrors ✓	2	Accept changes in speed of light (speed of light in air is less than speed in vacuum)
05.5	Explains phase difference or path difference conditions for constructive or destructive interference ✓ Initially in anti-phase (for destructive interference) ✓ Path difference must change by $\lambda/2$ ✓	3	

Question	Marking guidance	Mark	Comments
05.6	Use change in total (optical) path difference is $\frac{\lambda}{2}$ OR recognizes that path difference occurs in 2×280 passages along the tube ✓ 9.5×10^{-10} m ✓	2	Accept length changes by $\frac{\lambda}{4}$ (BOD)
05.7	The removal of energy OR the reduction of amplitude (of an oscillation) ✓ By (work done against) resistive forces ✓	2	
05.8	Idea of comparing the (simultaneous) readings from both to eliminate purely local effects ✓ Idea that two separate readings of passing gravity wave is confirmatory ✓ Idea of repeats and averages ✓	2	

Question	Marking guidance	Mark	Comments
06.1	If all of the kinetic energy is removed from the fluid (at the turbine) would become stationary ✓ This would block the movement of fluid into the turbine ✓ (WTTE)	2	
06.2	Correct substitution of data into the power equation including the Betz's Law ratio ✓ At least 1 correct value ✓ Correct values for both ✓ Suitable comparison ✓	4	Condone omission of time or factor of $\frac{16}{27}$ for 1st mark wind = 1.14×10^{11} J; tidal = 2.42×10^{11} J Accept answers that omit Betz ratio for 2nd marking point eg ratio calculated (2.1) or statement that tidal gives about twice as much or finds the difference between the two values
06.3	Use of $F = \frac{GMm}{r^2}$ ✓ Use of work done = force × distance moved ✓ $7.5(1) \times 10^{18}$ ✓	3	Accept Use of $E_P = \frac{GMm}{r^2}$ ✓ Accept attempt to calculate change in potential energy ✓
06.4	Orbital period will increase ✓ Use of circular motion equations to show that period increases eg $mrw^2 = \frac{GMm}{r^2}$ ✓	2	Accept reference to Kepler's 3rd Law for 2nd mark
06.5	Length of day increases ✓ Correct reference to conservation of angular momentum ✓	2	Accept angular velocity decreases

Question	Marking guidance	Mark	Comments
07.1	Half life is 433 year ✓ Suitable comment about useful life compared with half life eg count rate would not fall much in 30 y ✓	2	Must be a comparison and could be supported by further calculation
07.2	Range of only about 4 cm ✓ Cannot penetrate (plastic) case ✓	2	Accept reference to low activity of source
07.3	Calculates total energy ($\frac{19000 \times 5.5 \times 10^6}{15}$) ✓ 6.97×10^9 ✓	2	To at least 3 sf
07.4	Uses $I = \frac{Q}{t}$ or multiplies candidates 07.3 by 1.6×10^{-19} Multiplies by 2 to give $2.2(3) \times 10^{-9}$ (A) ✓	2	1.115×10^{-9} gets 1 mark
07.5	Divides 5.5×10^6 by 15×10^4 to give 37 or 36.7 (mm) ✓	1	
07.6	Nucleon numbers correct: 241; 237; 4 ✓ Proton numbers correct: 95; 93; 2 with symbol for α correct ✓	2	
07.7	Half-life is 2.15×10^6 a ✓ Much longer half life than Am so will not significantly change count rate OR activity of neptunium is negligible ✓	2	