Please check the examination details below before entering your candidate information

| Candidate surname | Other names |
|---|---|
| | |

**Pearson Edexcel International Advanced Level**

Centre Number | Candidate Number

# Monday 28 October 2019

Morning (Time: 1 hour 35 minutes) | Paper Reference **WPH04/01**

# Physics

## Advanced

## Unit 4: Physics on the Move

**You must have:**
Ruler, protractor

Total Marks

## Instructions

- Use **black** ink or ball-point pen.
- **Fill in the boxes** at the top of this page with your name, centre number and candidate number.
- Answer **all** questions.
- Answer the questions in the spaces provided – *there may be more space than you need.*

## Information

- The total mark for this paper is 80.
- The marks for **each** question are shown in brackets – *use this as a guide as to how much time to spend on each question.*
- Candidates may use a scientific calculator.
- Questions labelled with an **asterisk** (*) are ones where the quality of your written communication will be assessed – *you should take particular care with your spelling, punctuation and grammar, as well as the clarity of expression, on these questions.*
- The list of data, formulae and relationships is printed at the end of this booklet.

## Advice

- Read each question carefully before you start to answer it.
- Try to answer every question.
- Check your answers if you have time at the end.

*Turn over* ▶


©2019 Pearson Education Ltd.
1/1/1/1/1/

P 5 7 4 4 8 A 0 1 2 8

Pearson

## SECTION A

**Answer ALL questions.**

**For questions 1–10, in Section A, select one answer from A to D and put a cross in the box ☒. If you change your mind, put a line through the box ☒ and then mark your new answer with a cross ☒.**

**1** Which of the following are the base units for the Planck constant $h$?

☐ **A** J s

☐ **B** J

☐ **C** $kg\,m^2\,s^{-1}$

☐ **D** $kg\,m^2\,s^{-2}$

**(Total for Question 1 = 1 mark)**

**2** A railway truck moving with velocity $v$ connects with an identical railway truck that is initially stationary.

The two connected trucks move off with a velocity of $\frac{v}{2}$.

Select the row of the table that correctly describes whether momentum is conserved and whether the collision is elastic.

| | Momentum Conserved | Elastic Collision |
|---|---|---|
| ☐ **A** | No | No |
| ☐ **B** | No | Yes |
| ☐ **C** | Yes | No |
| ☐ **D** | Yes | Yes |

**(Total for Question 2 = 1 mark)**

DO NOT WRITE IN THIS AREA
DO NOT WRITE IN THIS AREA
DO NOT WRITE IN THIS AREA

**3** The shaded space in the diagram represents a vertical uniform electric field. The shaded space is also a vacuum. A drop of oil with a negative charge is moving upwards in the field with a constant velocity. A second drop of oil has a positive charge and is also within the same electric field.

Which of the following statements about the motion of the second drop of oil could be correct?

☒ **A** The oil drop moves downwards with a constant speed.

☒ **B** The oil drop moves downwards with an increasing speed.

☒ **C** The oil drop moves upwards with a constant speed.

☒ **D** The oil drop moves upwards with an increasing speed.

**(Total for Question 3 = 1 mark)**

**4** When investigating the structure of the atom, alpha particles were directed at a thin gold foil. It was observed that most of the alpha particles passed straight through undeflected.

Which of the following is a valid conclusion from this observation?

☒ **A** A gold atom is mostly empty space.

☒ **B** A gold atom is neutral.

☒ **C** A gold nucleus is positively charged.

☒ **D** A gold nucleus has a large number of protons.

**(Total for Question 4 = 1 mark)**

**5** A particle X has mass $m$, momentum $p$ and kinetic energy $E_k$.

A particle Y has mass $2m$ and kinetic energy $2E_k$.

Which of the following is the momentum of particle Y?

☒ **A** $\frac{p}{2}$

☒ **B** $p$

☒ **C** $2p$

☒ **D** $4p$

**(Total for Question 5 = 1 mark)**

DO NOT WRITE IN THIS AREA
DO NOT WRITE IN THIS AREA
DO NOT WRITE IN THIS AREA

**6** A charged capacitor of capacitance 10 μF discharges through a resistor of resistance 10 kΩ.

After time $t$, 10% of the original charge remains on the capacitor.

Which of the following gives the value of $t$ in seconds?

☒ **A** $-100 \times \ln 0.90$

☒ **B** $-0.1 \times \ln 0.90$

☒ **C** $-100 \times \ln 0.10$

☒ **D** $-0.1 \times \ln 0.10$

**(Total for Question 6 = 1 mark)**

---

**7** Which of the following statements is a reason why electrons can be used to probe the nuclei of atoms?

☒ **A** Electrons are negatively charged.

☒ **B** Electrons can be accelerated to high energies.

☒ **C** Electrons can behave as particles.

☒ **D** Electrons can be reflected.

**(Total for Question 7 = 1 mark)**

---

DO NOT WRITE IN THIS AREA
DO NOT WRITE IN THIS AREA
DO NOT WRITE IN THIS AREA

**8** A square coil of wire PQRS has sides of length $x$. It is in a magnetic field of magnetic flux density $B$ as shown. The wire carries a current $I$.

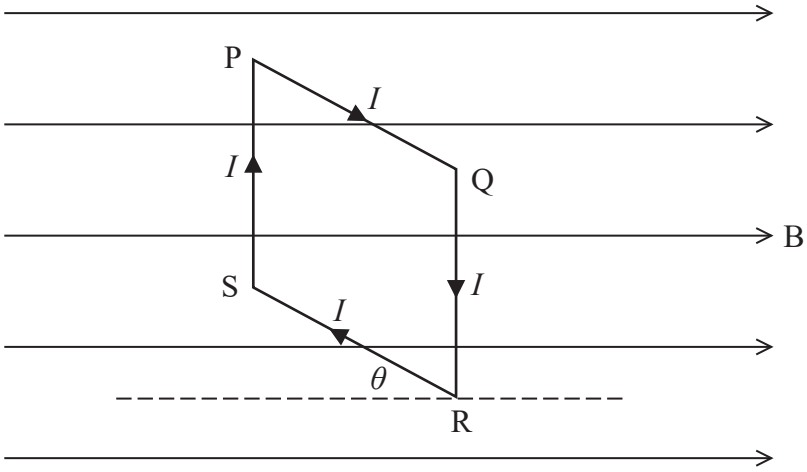


The plane of the coil is at an angle $\theta$ to the magnetic field.

Which of the following is equal to the magnitude of the force on side QR?

☒ **A** 0

☒ **B** $BIx$

☒ **C** $BIx\sin\theta$

☒ **D** $BIx\cos\theta$

**(Total for Question 8 = 1 mark)**

---

**9** A pion decays into a muon and an antineutrino, according to the following equation.

$$\text{pion} \rightarrow \mu^- + \bar{\upsilon}_\mu$$

The pion should be written as follows

☒ **A** p

☒ **B** $p^-$

☒ **C** $\pi^-$

☒ **D** $\bar{\pi}$

**(Total for Question 9 = 1 mark)**

---

DO NOT WRITE IN THIS AREA
DO NOT WRITE IN THIS AREA
DO NOT WRITE IN THIS AREA

**10** The following graph shows a variation of potential difference (p.d.) with time.

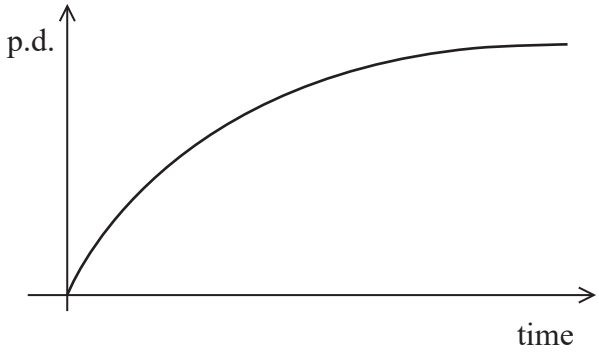


Which of the following circuits could produce this variation of p.d. on the voltmeter after the switch is closed?

☒ **A**

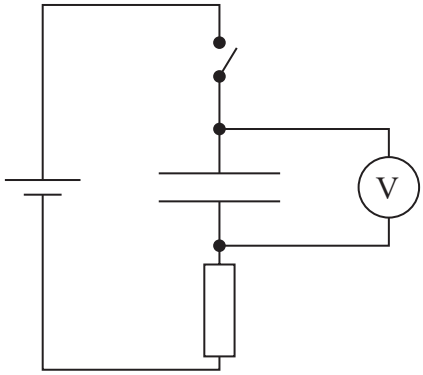


☒ **B**

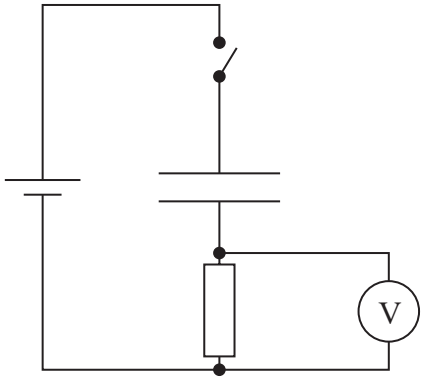


☒ **C**

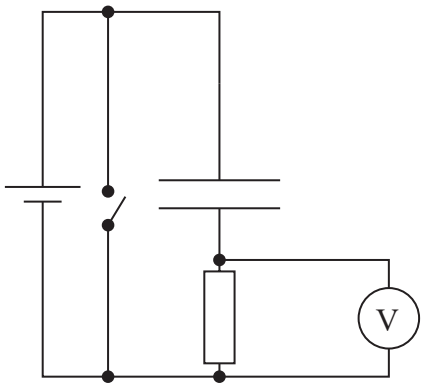


☒ **D**

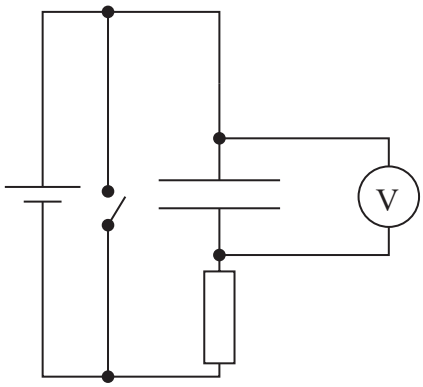


**(Total for Question 10 = 1 mark)**

**TOTAL FOR SECTION A = 10 MARKS**

DO NOT WRITE IN THIS AREA
DO NOT WRITE IN THIS AREA
DO NOT WRITE IN THIS AREA

DO NOT WRITE IN THIS AREA
DO NOT WRITE IN THIS AREA
DO NOT WRITE IN THIS AREA

**BLANK PAGE**

## SECTION B

**Answer ALL questions.**

**11** A tennis racket is used to hit a tennis ball. The graph shows how the horizontal force exerted by the racket on the ball varies with time.

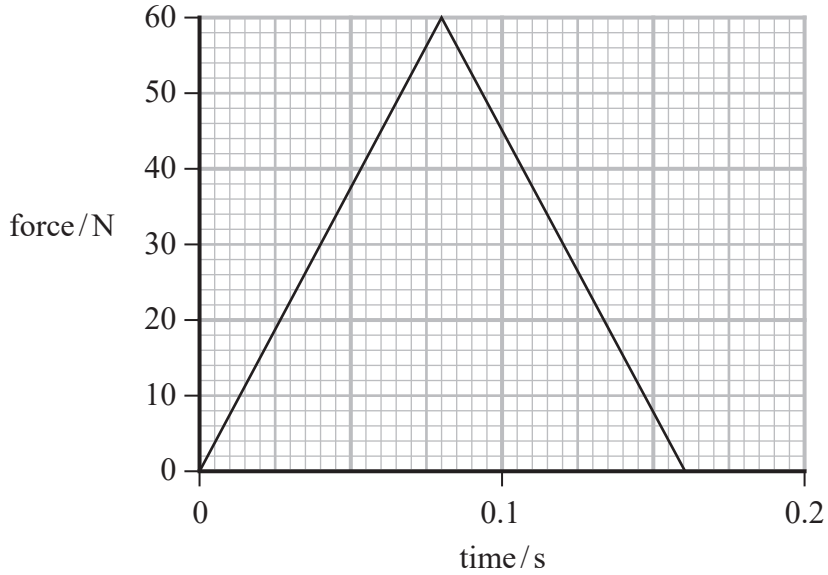


(a) The ball was initially moving horizontally towards the racket with a velocity of $45\,m\,s^{-1}$.

Calculate the horizontal velocity of the ball immediately after it left the racket.

mass of ball = 56 g

**(4)**

.....

.....

.....

.....

.....

.....

.....

Horizontal velocity = .....

DO NOT WRITE IN THIS AREA
DO NOT WRITE IN THIS AREA
DO NOT WRITE IN THIS AREA

(b) A student recorded a video of the ball before it was hit by the racket.

Explain how you could use the video recording to determine the velocity of the ball before it was hit by the racket.

**(2)**

.....

.....

.....

.....

.....

**(Total for Question 11 = 6 marks)**

DO NOT WRITE IN THIS AREA
DO NOT WRITE IN THIS AREA
DO NOT WRITE IN THIS AREA

**12** Most mobile phones have touch screens allowing a finger to select different functions.

A web site explains how this works with a simplified model.

The glass screen is coated on both sides with a conducting material, so that it forms a capacitor. A potential difference (p.d.) of 5.0 V is applied across the two sides.

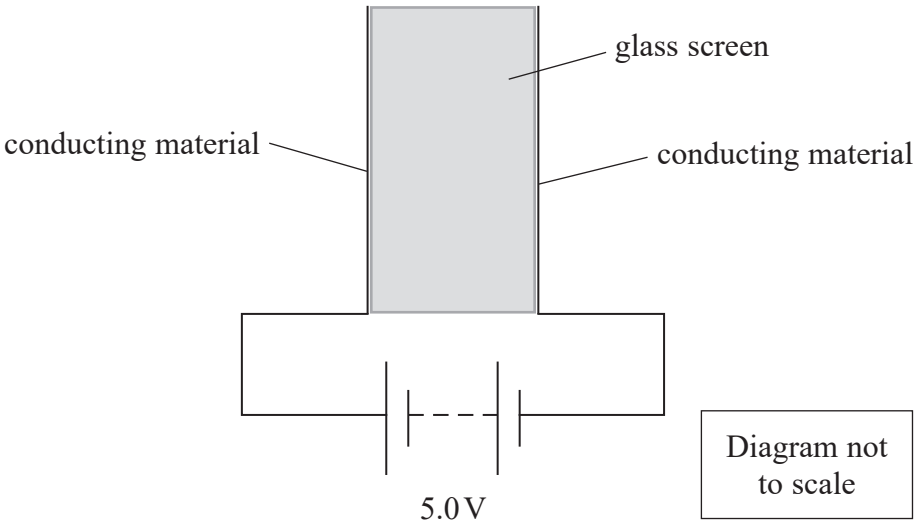


(a) Add to the diagram to show the electric field between the two sides.

**(3)**

(b) The arrangement has a capacitance of 12 pF.

Calculate the energy stored on the capacitor.

**(2)**

.....

.....

.....

.....

Energy stored = .....

DO NOT WRITE IN THIS AREA
DO NOT WRITE IN THIS AREA
DO NOT WRITE IN THIS AREA

(c) In normal use, the capacitor is then disconnected from the power supply but the charge that gave a p.d. of 5.0 V is left on the capacitor. When the finger touches the screen, the effect is as if a "finger capacitor" of 1.5 pF has been connected to the original capacitor, forming the circuit shown.

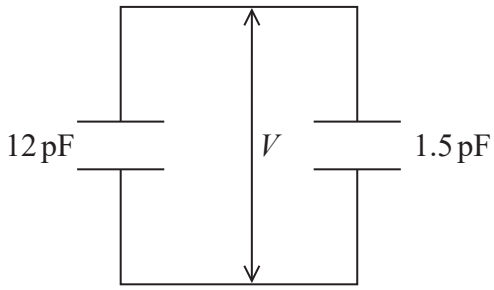


Some charge flows from the charged capacitor to the finger capacitor, reducing the p.d. to the same value $V$ across both capacitors.

Calculate $V$.

**(3)**

.....

.....

.....

.....

.....

.....

$V$ = .....

**(Total for Question 12 = 8 marks)**

DO NOT WRITE IN THIS AREA
DO NOT WRITE IN THIS AREA
DO NOT WRITE IN THIS AREA

**13** Steam engines can have their speed controlled by the device shown in the photograph. A simplified diagram of the device is shown on the right.

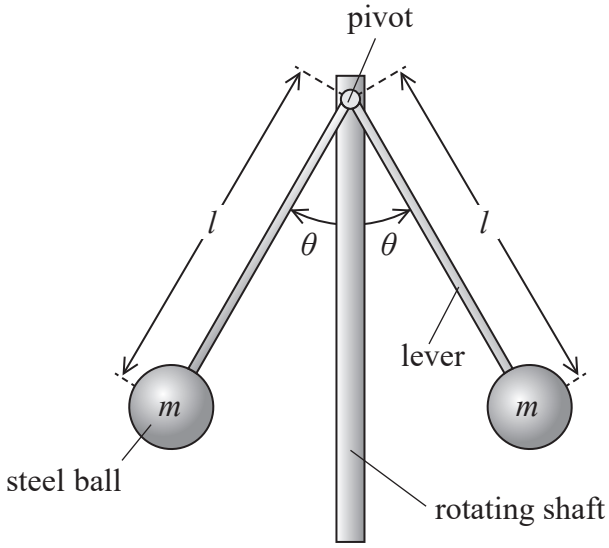


Two steel balls, each of mass $m$, can move apart at the end of levers that are freely pivoted. As the vertical shaft rotates, the two steel balls move apart so that the angle between the lever and the vertical is $\theta$.

This action is linked to a valve that reduces the flow of steam, reducing the speed of the engine.

(a) Complete a free-body force diagram to show the forces acting on one of the steel balls when the shaft is rotating.

**(2)**

DO NOT WRITE IN THIS AREA
DO NOT WRITE IN THIS AREA
DO NOT WRITE IN THIS AREA

(b) The shaft is rotating at 62 revolutions per minute.

Calculate the angle $\theta$.

$m = 5.1\,\text{kg}$

$l = 270\,\text{mm}$

**(6)**

.....

.....

.....

.....

.....

.....

.....

.....

.....

.....

.....

.....

.....

.....

.....

.....

$\theta =$ .....

**(Total for Question 13 = 8 marks)**

DO NOT WRITE IN THIS AREA
DO NOT WRITE IN THIS AREA
DO NOT WRITE IN THIS AREA

**14** Cyclotrons can be used in hospitals and are used to produce a beam of protons.

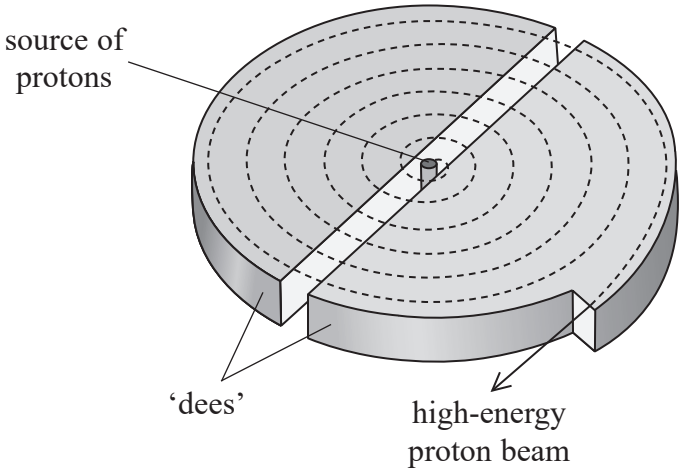


*(a) Explain how the cyclotron accelerates the protons to a high energy.

**(6)**

.....

.....

.....

.....

.....

.....

.....

.....

.....

.....

.....

DO NOT WRITE IN THIS AREA
DO NOT WRITE IN THIS AREA
DO NOT WRITE IN THIS AREA

(b) Fluorine-18 ($^{18}_{9}F$) is used for medical imaging. It can be produced by directing the high-energy proton beam at a solution containing oxygen-18 ($^{18}_{8}O$) atoms.

(i) Another particle is produced when an oxygen nucleus changes into a fluorine nucleus by this process.

Determine which particle is produced by writing a nuclear equation.

**(3)**

.....

.....

.....

.....

.....

(ii) Calculate the force of electrostatic repulsion between a proton and an oxygen nucleus at a separation between their centres of $3.2 \times 10^{-15}$ m.

**(3)**

.....

.....

.....

.....

.....

.....

Force = .....

**(Total for Question 14 = 12 marks)**

DO NOT WRITE IN THIS AREA
DO NOT WRITE IN THIS AREA
DO NOT WRITE IN THIS AREA

**15** The image shows the path of a pion and the path of a proton in a detector. Both particles moved from left to right.

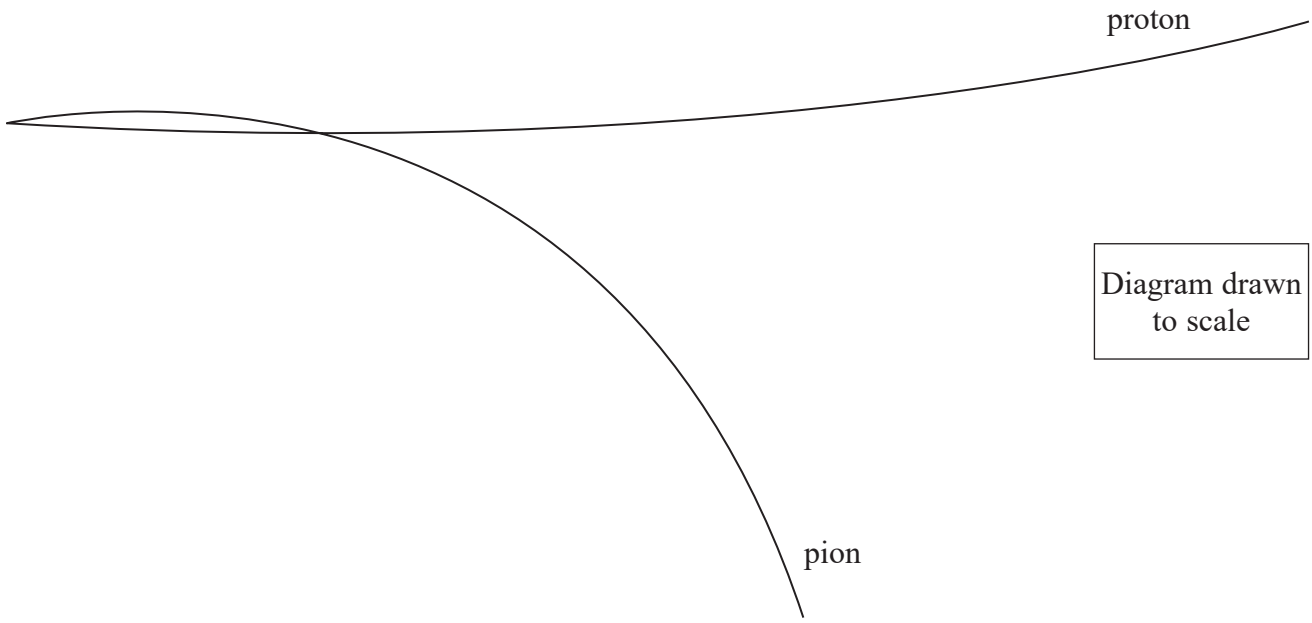


(a) Explain how the image can be used to deduce that the charge on the pion is negative.

**(2)**

.....

.....

.....

.....

(b) The proton and the pion were produced by the decay of a lambda particle.

State the charge of the lambda particle.

**(1)**

.....

.....

DO NOT WRITE IN THIS AREA
DO NOT WRITE IN THIS AREA
DO NOT WRITE IN THIS AREA

(c) In the detector there is a magnetic field of flux density 1.7 T.

(i) State the direction of the magnetic field.

**(1)**

.....

(ii) The image is half full-size.

Determine the momentum of the pion by taking measurements from the image.

**(4)**

.....

.....

.....

.....

Momentum = .....

(iii) The momentum of the proton is also known.

Sketch a labelled vector diagram to represent the momenta of the three particles involved in this decay.

**(3)**

**(Total for Question 15 = 11 marks)**

DO NOT WRITE IN THIS AREA
DO NOT WRITE IN THIS AREA
DO NOT WRITE IN THIS AREA

**16** A simple electric generator consists of a coil that is rotated within a uniform magnetic field as shown.

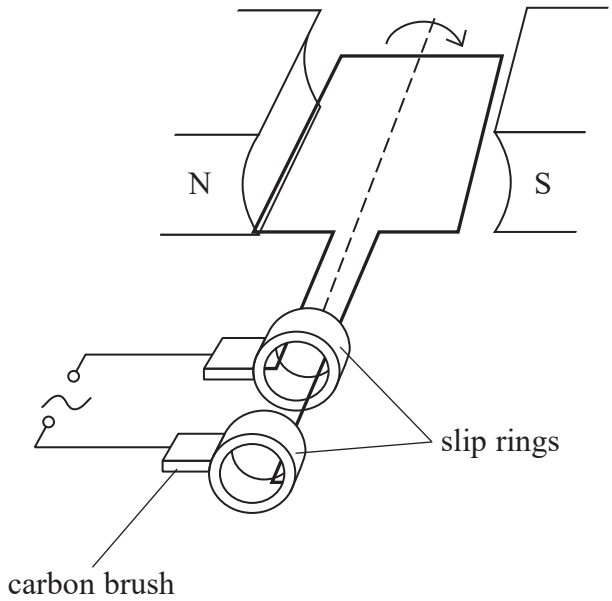


The graph shows the variation of e.m.f $\varepsilon$ with time $t$ as the coil is rotated at a steady frequency.

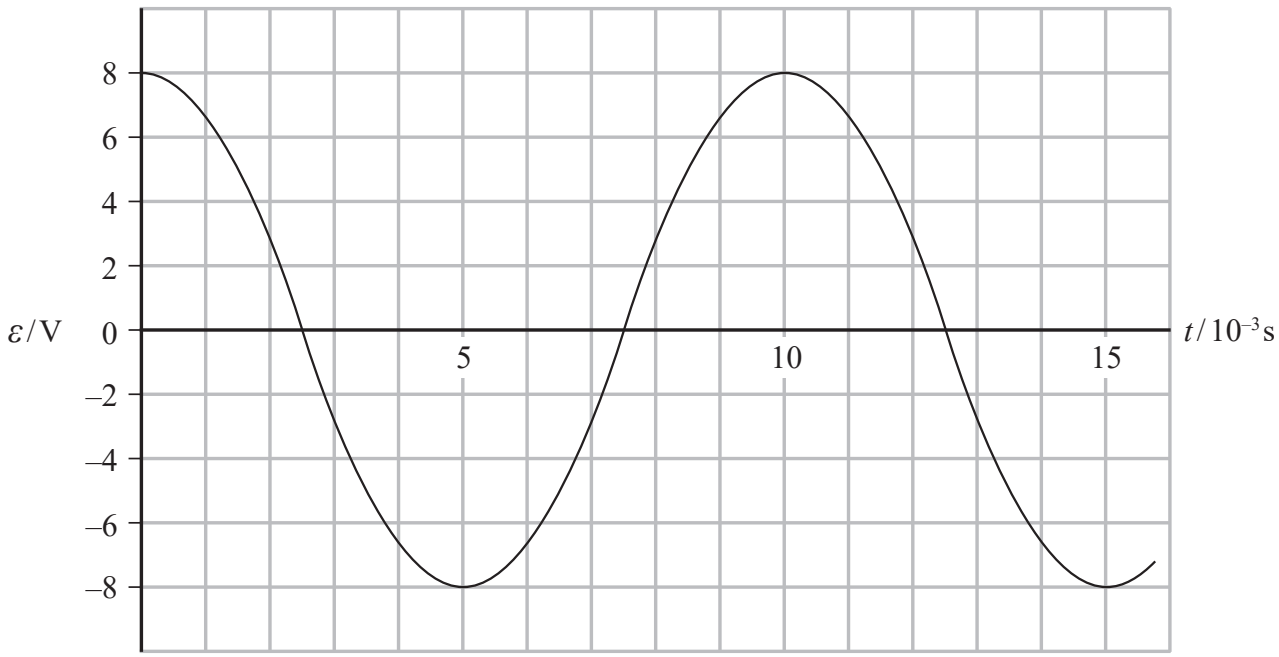


DO NOT WRITE IN THIS AREA
DO NOT WRITE IN THIS AREA
DO NOT WRITE IN THIS AREA

*(a) Explain why the value of $\varepsilon$ varies between a maximum value and zero.

**(4)**

.....

.....

.....

.....

.....

.....

.....

.....

(b) (i) Explain why the area under the graph represents the change in flux linkage.

**(2)**

.....

.....

.....

(ii) Determine the magnetic flux density between the poles of the magnet.

number of turns on coil = 500

area of coil = $2.5 \times 10^{-3}$ m$^2$

**(3)**

.....

.....

.....

.....

.....

.....

.....

Magnetic flux density = .....

DO NOT WRITE IN THIS AREA
DO NOT WRITE IN THIS AREA
DO NOT WRITE IN THIS AREA

(c) The speed at which the coil rotates is halved.

Sketch a graph on the axes below to show how the new $\varepsilon$ varies with time.

**(2)**

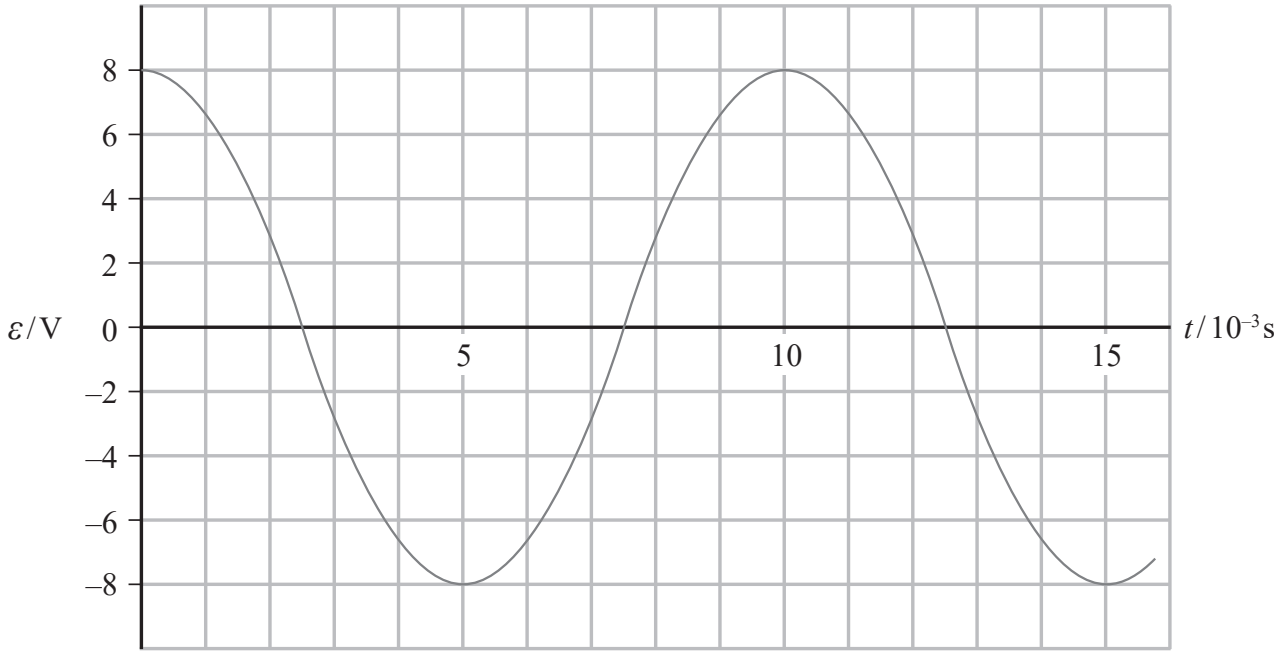


(d) A force is required to rotate the coil.

Explain why the size of the force increases when a lamp is connected to the output of the generator.

**(2)**

.....

.....

.....

.....

**(Total for Question 16 = 13 marks)**

DO NOT WRITE IN THIS AREA
DO NOT WRITE IN THIS AREA
DO NOT WRITE IN THIS AREA

**17** The Large Hadron Collider (LHC) was built to further our understanding of the standard model of matter. The LHC has produced a baryon with the largest mass yet observed. The $Xi_b$ baryon has a mass of 5.9 GeV/$c^2$, which is more than six times the mass of a proton.

(a) Show that the mass of the $Xi_b$ baryon is more than six times the mass of a proton.

**(4)**

.....

.....

.....

.....

.....

.....

.....

.....

.....

(b) The LHC accelerates two beams of protons to a very high energy before colliding them.

Explain why the protons need high energies to produce such particles as the $Xi_b$ baryon.

**(3)**

.....

.....

.....

.....

.....

.....

DO NOT WRITE IN THIS AREA
DO NOT WRITE IN THIS AREA
DO NOT WRITE IN THIS AREA

(c) The $Xi_b$ baryon travelled 0.47 mm in the detector before decaying. The lifetime of the $Xi_b$ baryon is $1.42 \times 10^{-12}$ s.

Calculate the speed of the $Xi_b$ baryon using these values and comment on your answer.

**(3)**

.....

.....

.....

.....

.....

.....

(d) The discovery of this particle was made public on the LHC website and shared with other scientific organisations.

Give one reason why the process of open communication is important in science.

**(1)**

.....

.....

.....

(e) Suggest a benefit of continuing to invest in complex experiments such as those involved in particle physics.

**(1)**

.....

.....

.....

.....

**(Total for Question 17 = 12 marks)**

**TOTAL FOR SECTION B = 70 MARKS**
**TOTAL FOR PAPER = 80 MARKS**

DO NOT WRITE IN THIS AREA
DO NOT WRITE IN THIS AREA
DO NOT WRITE IN THIS AREA

DO NOT WRITE IN THIS AREA
DO NOT WRITE IN THIS AREA
DO NOT WRITE IN THIS AREA

**BLANK PAGE**

**BLANK PAGE**

DO NOT WRITE IN THIS AREA
DO NOT WRITE IN THIS AREA
DO NOT WRITE IN THIS AREA

DO NOT WRITE IN THIS AREA
DO NOT WRITE IN THIS AREA
DO NOT WRITE IN THIS AREA

**BLANK PAGE**

## List of data, formulae and relationships

| | | |
|---|---|---|
| Acceleration of free fall | $g = 9.81\ \text{m s}^{-2}$ | (close to Earth's surface) |
| Boltzmann constant | $k = 1.38 \times 10^{-23}\ \text{J K}^{-1}$ | |
| Coulomb's law constant | $k = 1/4\pi\varepsilon_0$ <br> $= 8.99 \times 10^{9}\ \text{N m}^2\ \text{C}^{-2}$ | |
| Electron charge | $e = -1.60 \times 10^{-19}\ \text{C}$ | |
| Electron mass | $m_e = 9.11 \times 10^{-31}\ \text{kg}$ | |
| Electronvolt | $1\ \text{eV} = 1.60 \times 10^{-19}\ \text{J}$ | |
| Gravitational constant | $G = 6.67 \times 10^{-11}\ \text{N m}^2\ \text{kg}^{-2}$ | |
| Gravitational field strength | $g = 9.81\ \text{N kg}^{-1}$ | (close to Earth's surface) |
| Permittivity of free space | $\varepsilon_0 = 8.85 \times 10^{-12}\ \text{F m}^{-1}$ | |
| Planck constant | $h = 6.63 \times 10^{-34}\ \text{J s}$ | |
| Proton mass | $m_p = 1.67 \times 10^{-27}\ \text{kg}$ | |
| Speed of light in a vacuum | $c = 3.00 \times 10^{8}\ \text{m s}^{-1}$ | |
| Stefan-Boltzmann constant | $\sigma = 5.67 \times 10^{-8}\ \text{W m}^{-2}\ \text{K}^{-4}$ | |
| Unified atomic mass unit | $u = 1.66 \times 10^{-27}\ \text{kg}$ | |

***Unit 1***

*Mechanics*

| | |
|---|---|
| Kinematic equations of motion | $v = u + at$ <br> $s = ut + \frac{1}{2}at^2$ <br> $v^2 = u^2 + 2as$ |
| Forces | $\Sigma F = ma$ <br> $g = F/m$ <br> $W = mg$ |
| Work and energy | $\Delta W = F\Delta s$ <br> $E_k = \frac{1}{2}mv^2$ <br> $\Delta E_{grav} = mg\Delta h$ |

*Materials*

| | |
|---|---|
| Stokes' law | $F = 6\pi\eta rv$ |
| Hooke's law | $F = k\Delta x$ |
| Density | $\rho = m/V$ |
| Pressure | $p = F/A$ |
| Young modulus | $E = \sigma/\varepsilon$ where <br> Stress $\sigma = F/A$ <br> Strain $\varepsilon = \Delta x/x$ |
| Elastic strain energy | $E_{el} = \frac{1}{2}F\Delta x$ |

DO NOT WRITE IN THIS AREA
DO NOT WRITE IN THIS AREA
DO NOT WRITE IN THIS AREA

DO NOT WRITE IN THIS AREA
DO NOT WRITE IN THIS AREA
DO NOT WRITE IN THIS AREA

***Unit 2***

*Waves*

| | |
|---|---|
| Wave speed | $v = f\lambda$ |
| Refractive index | ${}_1\mu_2 = \sin i / \sin r = v_1/v_2$ |

*Electricity*

| | |
|---|---|
| Potential difference | $V = W/Q$ |
| Resistance | $R = V/I$ |
| Electrical power, energy and efficiency | $P = VI$<br>$P = I^2R$<br>$P = V^2/R$<br>$W = VIt$ |

$$\% \text{ efficiency} = \frac{\text{useful energy output}}{\text{total energy input}} \times 100$$

$$\% \text{ efficiency} = \frac{\text{useful power output}}{\text{total power input}} \times 100$$

| | |
|---|---|
| Resistivity | $R = \rho l/A$ |
| Current | $I = \Delta Q/\Delta t$<br>$I = nqvA$ |
| Resistors in series | $R = R_1 + R_2 + R_3$ |
| Resistors in parallel | $\frac{1}{R} = \frac{1}{R_1} + \frac{1}{R_2} + \frac{1}{R_3}$ |

*Quantum physics*

| | |
|---|---|
| Photon model | $E = hf$ |
| Einstein's photoelectric equation | $hf = \phi + \frac{1}{2}mv^2_{max}$ |

***Unit 4***

*Mechanics*

| | |
|---|---|
| Momentum | $p = mv$ |
| Kinetic energy of a non-relativistic particle | $E_k = p^2/2m$ |
| Motion in a circle | $v = \omega r$<br>$T = 2\pi/\omega$<br>$F = ma = mv^2/r$<br>$a = v^2/r$<br>$a = r\omega^2$ |

*Fields*

| | |
|---|---|
| Coulomb's law | $F = kQ_1Q_2/r^2$ where $k = 1/4\pi\varepsilon_0$ |
| Electric field | $E = F/Q$<br>$E = kQ/r^2$<br>$E = V/d$ |
| Capacitance | $C = Q/V$ |
| Energy stored in capacitor | $W = \frac{1}{2}QV$ |
| Capacitor discharge | $Q = Q_0 e^{-t/RC}$ |
| In a magnetic field | $F = BIl \sin\theta$<br>$F = Bqv \sin\theta$<br>$r = p/BQ$ |
| Faraday's and Lenz's laws | $\varepsilon = -\mathrm{d}(N\phi)/\mathrm{d}t$ |

*Particle physics*

| | |
|---|---|
| Mass-energy | $\Delta E = c^2 \Delta m$ |
| de Broglie wavelength | $\lambda = h/p$ |

DO NOT WRITE IN THIS AREA
DO NOT WRITE IN THIS AREA
DO NOT WRITE IN THIS AREA