OXFORD

INTERNATIONAL
AQA EXAMINATIONS

INTERNATIONAL A-LEVEL
PHYSICS
PH05

Unit 5 Physics in practice

Mark scheme

June 2019

Version: 1.0 Final

196XPH05/MS

Mark schemes are prepared by the Lead Assessment Writer and considered, together with the relevant questions, by a panel of subject teachers. This mark scheme includes any amendments made at the standardisation events which all associates participate in and is the scheme which was used by them in this examination. The standardisation process ensures that the mark scheme covers the students' responses to questions and that every associate understands and applies it in the same correct way. As preparation for standardisation each associate analyses a number of students' scripts. Alternative answers not already covered by the mark scheme are discussed and legislated for. If, after the standardisation process, associates encounter unusual answers which have not been raised they are required to refer these to the Lead Assessment Writer.

It must be stressed that a mark scheme is a working document, in many cases further developed and expanded on the basis of students' reactions to a particular paper. Assumptions about future mark schemes on the basis of one year's document should be avoided; whilst the guiding principles of assessment remain constant, details will change, depending on the content of a particular examination paper.

Further copies of this mark scheme are available from aqa.org.uk

Copyright © 2019 Oxford International AQA Examinations and its licensors. All rights reserved.

Level of response marking instructions

Level of response mark schemes are broken down into levels, each of which has a descriptor. The descriptor for the level shows the average performance for the level. There are marks in each level.

Before you apply the mark scheme to a student's answer read through the answer and annotate it (as instructed) to show the qualities that are being looked for. You can then apply the mark scheme.

Step 1 Determine a level

Start at the lowest level of the mark scheme and use it as a ladder to see whether the answer meets the descriptor for that level. The descriptor for the level indicates the different qualities that might be seen in the student's answer for that level. If it meets the lowest level then go to the next one and decide if it meets this level, and so on, until you have a match between the level descriptor and the answer. With practice and familiarity you will find that for better answers you will be able to quickly skip through the lower levels of the mark scheme.

When assigning a level you should look at the overall quality of the answer and not look to pick holes in small and specific parts of the answer where the student has not performed quite as well as the rest. If the answer covers different aspects of different levels of the mark scheme you should use a best fit approach for defining the level and then use the variability of the response to help decide the mark within the level, ie if the response is predominantly level 3 with a small amount of level 4 material it would be placed in level 3 but be awarded a mark near the top of the level because of the level 4 content.

Step 2 Determine a mark

Once you have assigned a level you need to decide on the mark. The descriptors on how to allocate marks can help with this. The exemplar materials used during standardisation will help. There will be an answer in the standardising materials which will correspond with each level of the mark scheme. This answer will have been awarded a mark by the Lead Examiner. You can compare the student's answer with the example to determine if it is the same standard, better or worse than the example. You can then use this to allocate a mark for the answer based on the Lead Examiner's mark on the example.

You may well need to read back through the answer as you apply the mark scheme to clarify points and assure yourself that the level and the mark are appropriate.

Indicative content in the mark scheme is provided as a guide for examiners. It is not intended to be exhaustive and you must credit other valid points. Students do not have to cover all of the points mentioned in the Indicative content to reach the highest level of the mark scheme.

An answer which contains nothing of relevance to the question must be awarded no marks.

Question	Marking guidance	Mark	Comments
01.1	D = 25.9 and ΔD = 0.5 ✓	1	Exact answers only
01.2	Finds one percentage error: 5% for h; 1.9% or 2% for D ✓ percentage errors in h added to 2 × %error in D to make 8.8% 8.9% or 9% **ecf from 01.1**✓	2	No sf penalty Candidates that have uncertainty in D = 0.6 in 01.1 are likely to get 9.6 %
01.3	ρ = 6.7(4) (g cm^{-3})	1	Accept 6.74×10^3 kg m^{-3} if correct unit given
01.4	Candidate's **01.2** added to candidate's %error in m Uses candidate's total percentage error to find absolute error in ρ✓	2	Expect to see 8.9% + 1.4 % = 10(.3)% Expect to see uncertainty = 0.7 (g cm^{-3})
01.5	ΔV% = 20 ✓	1	
01.6	The method used by the first student as it is likely to be more accurate OR % error in V is smaller **cao** ✓	1	

Question	Marking guidance	Mark	Comments
02.1	Good attempt to draw a smooth curve passing through or near to all the plotted points with an even scatter of the points about the line ✓	1	Do not accept curve in which several consecutive points are on the same side of the line. Do not accept multiple lines
02.2	22.7 °C ✓	1	Accept 22.8 °C
02.3	19.9 or 20.0	1	3 sf only
02.4	Good tangent drawn at candidate's **02.3** ✓	1	Must be on the cooling part of the curve
02.5	Large triangle used for gradient calculation ✓ Correct gradient for the candidate's tangent ✓	2	Expect (-)0.16 to (-) 0.22 (K minute^{-1})
02.6	Finds time taken between 17 and 18 minutes ✓ Candidate's **02.5** or 0.2 × candidate's 17.5 ✓	2	The unit is required. Expect answers around 3.0 to 3.7 K

Question	Marking guidance	Mark	Comments
03.1	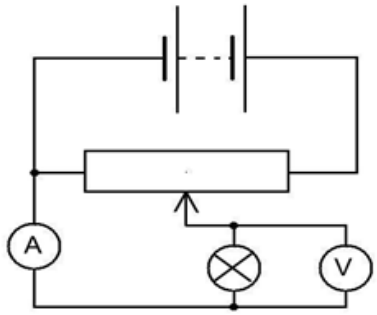	1	Or equivalent circuit
03.2	MAX 3 from: Measure pd and current... ✓ ... for (at least) six values of the pd V between 0 and 6 volts record V and current I ✓ Repeat at least once for the same values of V and find the average value for I ✓ For each value of V calculate power P using $P = IV$ ✓ **Plus either** Plot a graph of P against I^3 ✓ If this is a straight line passing through the origin then $P \propto I^3$ ✓ **Or** Plot a graph of log$P$ against log$I$ ✓ If this is a straight line of gradient 3 then $P \propto I^3$ ✓	5	Accept use of $P = \frac{V^2}{R}$ <u>for a known resistance</u> Accept calculate I^2 if using the method below. Accept plot of V against I^2 Allow 1 mark for calculating P / I^3 and demonstrating that it is a constant

Question	Marking guidance	Mark	Comments
04.1	Squares both sides ✓ Multiplies throughout by h and separates the fractions to give: $T^2h = (4\pi^2/g)h^2 + (4\pi^2/g)k^2$ ✓ This is of the form $y = mx + c$ which is the equation of a straight line graph ✓	3	Must quote $y = mx + c$
04.2	0.010 | 1.02 0.090 | 1.34 0.250 | 2.06 0.490 | 3.06 0.810 | 4.32	2	One mark for correct calculations One mark for sig figs as shown
04.3	Sensible scales marked on both axes ✓ All five points accurately plotted <u>on suitable scales</u>✓ Well-drawn straight line of best fit ✓	3	The line of best fit should follow the trend of the points with an even scatter of points on either side of the line.
04.4	Large triangle used to find the gradient of the line of best fit. Evidence must be seen on the graph✓ Value of gradient in the range 4.1 to 4.25 ($s^2\ m^{-1}$) Accept if not explicitly calculated but used in MP3✓ Uses gradient $= \frac{4\pi^2}{g}$ ✓ Answer in the range 9.3–9.6 m s^{-2} ✓	4	2 or 3 sf only and **unit required**

Question	Marking guidance	Mark	Comments
04.5	Intercept on the y-axis read correctly ✓ Intercept equated with the gradient × k^2 and consistent value for k found ✓	2	The expected value for k is about 0.5

Question	Marking guidance	Mark	Comments
05.1	Smaller component of (the wind's) velocity is perpendicular to the rotor wtte✓	1	Accept idea that a smaller area is presented to the wind
05.2	Prevent damage to the installation ✓	1	
05.3	Data extraction seen 250 (W) and 15 (m s^{-1}) ✓ Correct substitution $\frac{1}{2}\pi 0.46^2 \times 1.2 \times 15^3$ ✓ 1350 W seen ✓ 18.6% to at least 2 sf ✓	4	Accept slight variation in third significant figure if due to reasonable rounding
05.4	V_{rms} = 12 V OR P = 250 W ✓ Use of P = VI ✓ 21 A ✓	3	Allow small variation for rounding. Expect 20.6 to 20.8
05.5	MAX 2 Idea that (work done against) friction reduces efficiency ✓ Idea that brushes have resistance and have I^2R losses ✓ Idea of to wear of brushes / commutator and/or maintenance ✓	2	Must be more than just a mention of friction or or just more efficient Accept the idea that brushless generators would cost less to make

Question	Marking guidance	Mark	Comments
05.6	Emf is induced due to changing magnetic flux (linkage) in (stator) coil ✓ Different direction (of induced emf) when flux (linkage) is increasing / decreasing ✓	2	Accept cutting of flux instead of change in flux linkage
05.7	Uses $E = (-)\mathrm{N}\frac{\mathrm{d}\phi}{\mathrm{d}t}$ or $E = (-)\frac{\mathrm{d}\phi}{\mathrm{d}t}$ ✓ 16 ✓ $\mathrm{T\ s^{-1}}$ ✓	3	 Accept $\mathrm{Wb\ m^{-2}\ s^{-1}}$ or $\mathrm{V\ m^{-2}}$

Question	Marking guidance	Mark	Comments
06.1	MAX 3 Binding energy is the energy that would be needed to separate the nucleons completely (wtte) ✓ BE of fission products is greater than the binding energy of the initial nucleus OR BE/nucleon increases (during fission)✓ Idea that the mass of the products is less that the mass of the uranium (+ neutron) ✓ Relates the change in binding energy is the energy released in the fission ✓	3	Accept reasonable reference to mass defect Must be BE change that is related to energy released – not mass change or defect
06.2	MAX 2 The idea that fast moving fission products and/or neutrons have kinetic energy or transfer the energy released in fission✓ ... by colliding with or interacting with with atoms in the fuel rod/ cladding/ moderator, increasing its internal energy ✓ Conduction (from fuel rod) to coolant ✓	2	Accept mention of energy from subsequent radioactive decay of fission products for 1 mark. 2nd mark if mechanism of energy transfer in radioactive decay is explained
06.3	Neutrinos take some of the 203 MeV (and do not interact with matter in the reactor wtte ✓	1	Accept leakage of neutrons and/or gamma from the reactor or energy from radioactive decay of fission products (after fuel is removed from the reactor). Accept energy loss to the surroundings but not to other parts of the system such as moderattor

06.4	Divides 1500 by energy per fission **or** uses 1 MeV = 1.6×10^{-13} J ✓ $5.2(1) \times 10^{19}$ ✓	2	

Question	Marking guidance	Mark	Comments
06.5	Idea that it either does work on the carbon dioxide or heats it or increases its energy and the energy stays within the system Idea that the increase in internal energy of the coolant will be recovered later ✓	2	
06.6	Use of $Q = mc\Delta\theta$ ✓ 1140 (J kg^{-1} K^{-1}) ✓	2	
06.7	Use of $\dot{Q} = UA\Delta\theta$ ✓ Leading to 0.22 MW ✓ Statement showing it not to be significant eg $\frac{.22}{1500}$ or 0.0146% of the output ✓	3	Accept 0.22 MW << 1500 MW

Question	Marking guidance	Mark	Comments
07.1	Use of $R = \frac{\rho l}{A}$ ignoring powers of ten and accept lack of factor of 6 in the length for MP1✓ $\frac{95 \times 1.2 \times 10^{-10}}{6 \times 2.5 \times 10^{-2}}$ ✓ 7.6×10^{-8} (Ω m) ✓	3	Either correct substitution or correct manipulation
07.2	Attempts to recalculate using 98% of A and 102% of l OR new $R = \frac{1.02}{0.98} 95$ ✓ 99 (Ω) ✓	2	Accept 1.04 x 95
07.3	Increase in temperature causes an increase in resistance (for a metal conductor) … ✓ ...leading to the conclusion that it will cause an overestimate in the weight or mass ✓	2	Accept resistance changes due to thermal expansion of the material in the gauge for 1 mark MP2 is dependent on MP1 Do not allow statement that the mass increases
07.4	Attempts to use $F = BIl$ ✓ Clear use of principle of moments ✓ Clear correct and unambiguous manipulation ✓	3	

Question	Marking guidance	Mark	Comments
07.5	Use of $I = \frac{2mg}{9BN\pi r}$ ✓ $0.1\ \mu A$ gives $1.3(8) \times 10^{-8}$ kg OR $1\ \mu g$ gives 7.2×10^{-8} A ✓ No since smallest detectable mass change is greater than 1×10^{-9} kg OR equivalent ✓	3	Either correct substitution or rearrangement Must include correct unit Must have a correct numerical comparison