Write your name here

Surname	Other names

Pearson Edexcel International Advanced Level

Centre Number | Candidate Number

Physics

Advanced Subsidiary
Unit 2: Physics at Work

Thursday 9 June 2016 – Afternoon
Time: 1 hour 30 minutes

Paper Reference
WPH02/01

You must have:
Ruler

Total Marks

Instructions

- Use **black** ink or ball-point pen.
- **Fill in the boxes** at the top of this page with your name, centre number and candidate number.
- Answer **all** questions.
- Answer the questions in the spaces provided – *there may be more space than you need.*

Information

- The total mark for this paper is 80.
- The marks for **each** question are shown in brackets – *use this as a guide as to how much time to spend on each question.*
- Questions labelled with an **asterisk** (*) are ones where the quality of your written communication will be assessed – *you should take particular care with your spelling, punctuation and grammar, as well as the clarity of expression, on these questions.*
- The list of data, formulae and relationships is printed at the end of this booklet.
- Candidates may use a scientific calculator.

Advice

- Read each question carefully before you start to answer it.
- Keep an eye on the time.
- Try to answer every question.
- Check your answers if you have time at the end.

Turn over ▶

P46651A

©2016 Pearson Education Ltd.

1/1/1/1/

P 4 6 6 5 1 A 0 1 2 4

PEARSON

SECTION A

Answer ALL questions.

For questions 1–10, in Section A, select one answer from A to D and put a cross in the box ☒. If you change your mind, put a line through the box ☒ and then mark your new answer with a cross ☒.

1 Which of the following are two SI base units?

☐ **A** ampere and hertz

☐ **B** ampere and second

☐ **C** coulomb and hertz

☐ **D** coulomb and second

(Total for Question 1 = 1 mark)

2 Which of the following types of wave has the highest frequency?

☐ **A** infrared

☐ **B** microwave

☐ **C** radio

☐ **D** ultraviolet

(Total for Question 2 = 1 mark)

3 Sound waves are classified as longitudinal because they

☐ **A** are produced by vibrations.

☐ **B** produce displacement along the direction of travel of the wave.

☐ **C** require a medium through which to travel.

☐ **D** transfer energy along the direction of travel of the wave.

(Total for Question 3 = 1 mark)

DO NOT WRITE IN THIS AREA
DO NOT WRITE IN THIS AREA
DO NOT WRITE IN THIS AREA

DO NOT WRITE IN THIS AREA

4 Two speakers, S_1 and S_2, are placed 11 m apart and connected to a signal generator producing a sound of wavelength 2 m. The sound waves emitted by S_1 and S_2 are in phase.

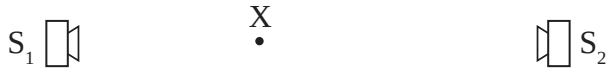

The point X is 5 m from S_1 and 6 m from S_2.

Which of the following best describes the phase relationship between the sound waves received from the speakers?

At point X

☒ **A** the wave from S_1 is $\pi/2$ radians ahead of the wave from S_2.

☒ **B** the wave from S_2 is $\pi/2$ radians ahead of the wave from S_1.

☒ **C** the waves are in antiphase.

☒ **D** the waves are in phase.

(Total for Question 4 = 1 mark)

5 Standing waves are created in a pipe of length L. The pipe is closed at one end. There is an antinode at the open end and a node at the closed end.

What is the wavelength corresponding to the lowest possible frequency of standing wave?

☒ **A** $L/2$

☒ **B** $L/4$

☒ **C** $2L$

☒ **D** $4L$

(Total for Question 5 = 1 mark)

6 A light ray travelling in medium 2 meets the boundary with medium 1 at an angle of incidence θ.

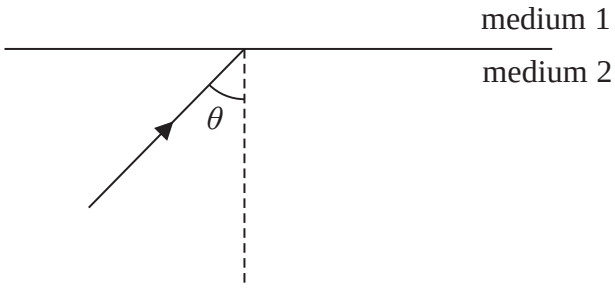

The critical angle for light passing from medium 2 to medium 1 is c.
Which of the following is correct?

☒ **A** no light is reflected if $\theta > c$

☒ **B** no light is reflected if $\theta < c$

☒ **C** no light is transmitted if $\theta > c$

☒ **D** no light is transmitted if $\theta < c$

(Total for Question 6 = 1 mark)

7 When the surface of a metal is illuminated with a particular wavelength of light, electrons are emitted.

Which of the following statements is **not** true?

☒ **A** Decreasing the wavelength below a certain value causes electron emission to stop.

☒ **B** Electrons are emitted at a greater rate if the intensity of the light is increased.

☒ **C** Maximum kinetic energy of electrons = photon energy – work function of metal

☒ **D** The work function is the minimum energy required to release an electron from the metal surface.

(Total for Question 7 = 1 mark)

8 Light of frequency f and speed c passes from air into a transparent medium of refractive index n.
What is the frequency of the light in the transparent medium?

☒ **A** nf

☒ **B** f

☒ **C** f/n

☒ **D** f/nc

(Total for Question 8 = 1 mark)

DO NOT WRITE IN THIS AREA
DO NOT WRITE IN THIS AREA
DO NOT WRITE IN THIS AREA

9 The diagram shows a block of conducting material.

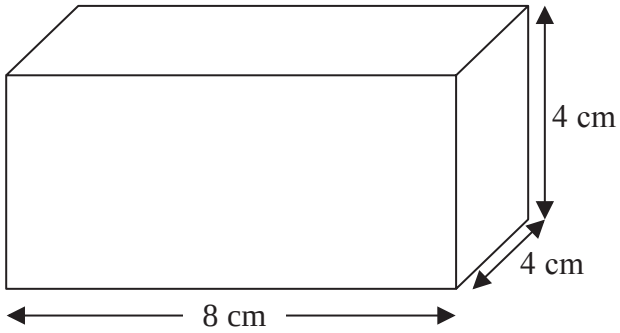

When a potential difference is applied across the opposite faces that are 8 cm apart, the current through the block is *I*.

The same potential difference is then applied across opposite faces that are 4 cm apart.

What is the new current?

☒ **A** $I/2$

☒ **B** I

☒ **C** $2I$

☒ **D** $4I$

(Total for Question 9 = 1 mark)

10 A student sets up the following circuit where X is an unknown component. The cell has negligible internal resistance.

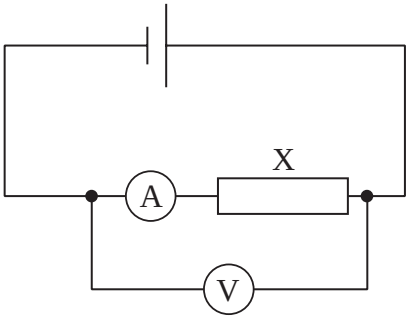

The student wants to produce a current-potential difference graph for component X. What change needs to be made to the circuit in order to collect the data?

☒ **A** Add a variable resistor in parallel with the cell.

☒ **B** Add a variable resistor in series with the cell.

☒ **C** Connect the voltmeter in parallel with X only.

☒ **D** Reverse the cell.

(Total for Question 10 = 1 mark)

TOTAL FOR SECTION A = 10 MARKS

DO NOT WRITE IN THIS AREA
DO NOT WRITE IN THIS AREA
DO NOT WRITE IN THIS AREA

SECTION B

Answer ALL questions in the spaces provided.

11 Straight water waves travel from left to right across a ripple tank. The waves pass through a gap.

The photographs show what happens as the size of the gap is decreased.

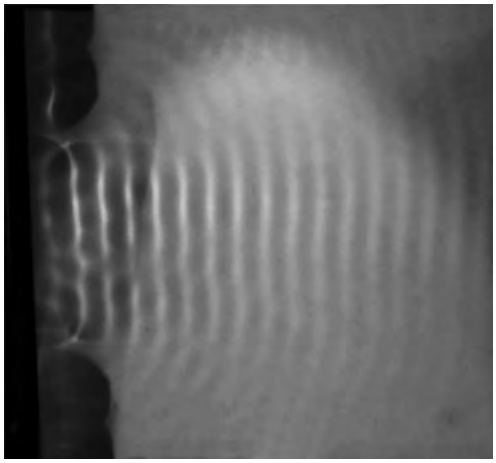

Gap size = 7 cm

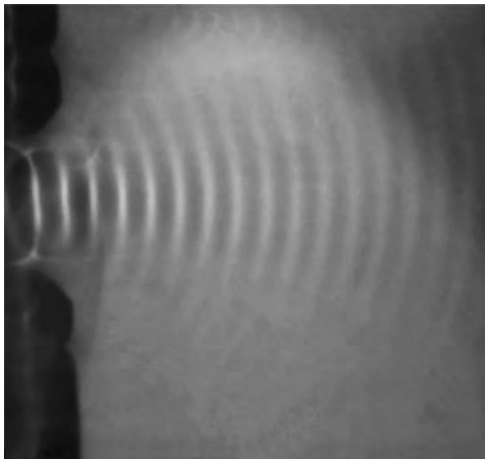

Gap size = 3 cm

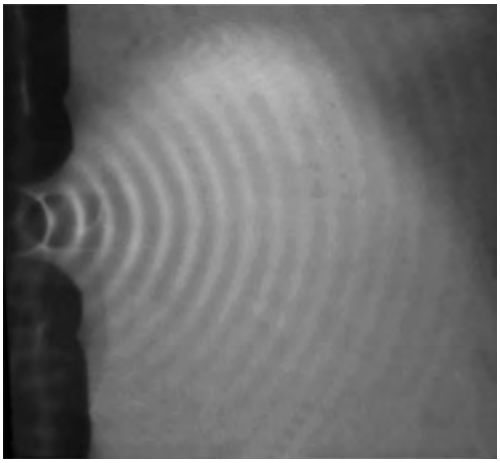

Gap = 1.2 cm

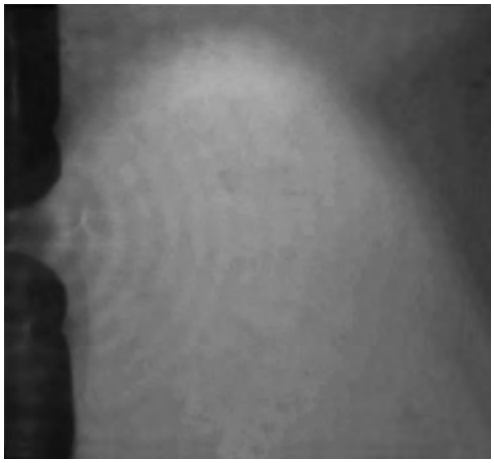

Gap = 0.1 cm

(a) The speed of the water waves is 24 cm s^{-1} and the frequency is 20 Hz.
Show that the wavelength is about 1 cm.

(2)

.....

.....

.....

.....

DO NOT WRITE IN THIS AREA
DO NOT WRITE IN THIS AREA
DO NOT WRITE IN THIS AREA

(b) Explain what is shown by the sequence of photographs.

(4)

.....

.....

.....

.....

.....

.....

.....

.....

(Total for Question 11 = 6 marks)

DO NOT WRITE IN THIS AREA
DO NOT WRITE IN THIS AREA
DO NOT WRITE IN THIS AREA

***12** The photograph shows some toy 'glow-in-the-dark' stones. After being exposed to sunlight the stones glow, emitting light.

The packaging states that the stones work with any light source. A student tests this by illuminating the stones with light from a red laser, a green laser and a violet laser in turn. The red and green lasers have no effect on the stones, but the glow is seen immediately when the violet laser is shone on the stones.

The light produced by the lasers has the following wavelengths:

red = 650 nm
green = 530 nm
violet = 405 nm

Suggest how these observations could be explained by the photon nature of light but not the wave nature of light.

(5)

.....

.....

.....

.....

.....

.....

.....

.....

.....

.....

.....

.....

.....

(Total for Question 12 = 5 marks)

DO NOT WRITE IN THIS AREA
DO NOT WRITE IN THIS AREA
DO NOT WRITE IN THIS AREA

***13** A spectator at a motor race records the frequency of the sound he hears as a racing car drives past on a straight part of the track.

The graph shows how the frequency of the sound he hears varies with time.

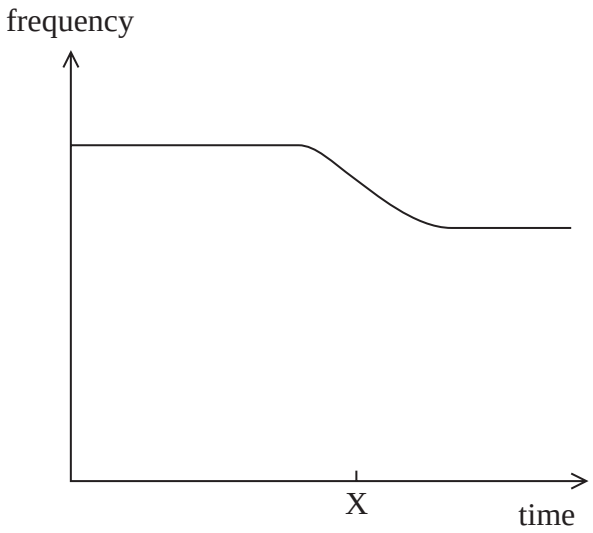

The car passes the spectator at time X as shown on the graph.

Explain the shape of the graph.

(4)

.....

.....

.....

.....

.....

.....

.....

.....

.....

.....

(Total for Question 13 = 4 marks)

DO NOT WRITE IN THIS AREA
DO NOT WRITE IN THIS AREA
DO NOT WRITE IN THIS AREA

14 An ultrasound detector connected to an oscilloscope is set up near to an ultrasound emitter.

The following trace is recorded.

Trace 1

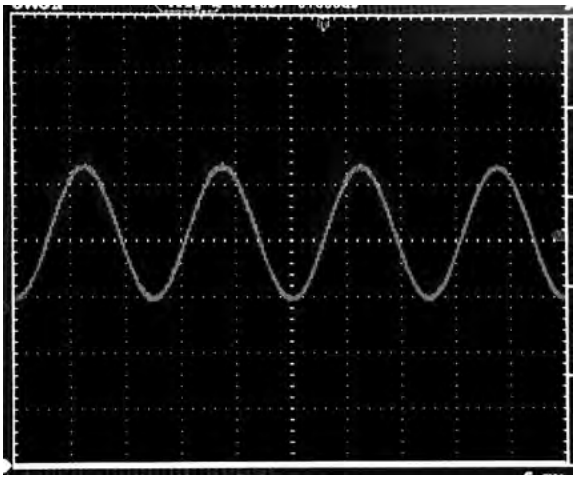

(a) The time-base of the oscilloscope is 10 μs per division.
Determine the frequency of the ultrasound wave.

(2)

.....

.....

.....

.....

Frequency = ...

(b) The detector is then set up with two ultrasound emitters as shown.

The emitters are connected to the same signal generator so that they emit ultrasound of the same frequency.

DO NOT WRITE IN THIS AREA
DO NOT WRITE IN THIS AREA
DO NOT WRITE IN THIS AREA

When both emitters are connected the following trace 2 is recorded. When the detector is moved a small distance in the direction of the arrow shown on the diagram, trace 3 is recorded.

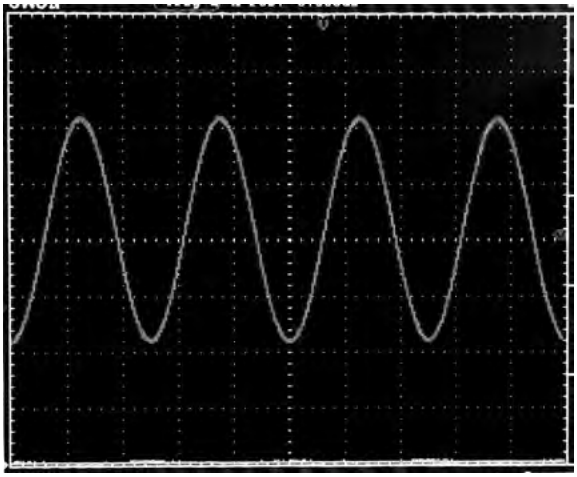

Trace 2

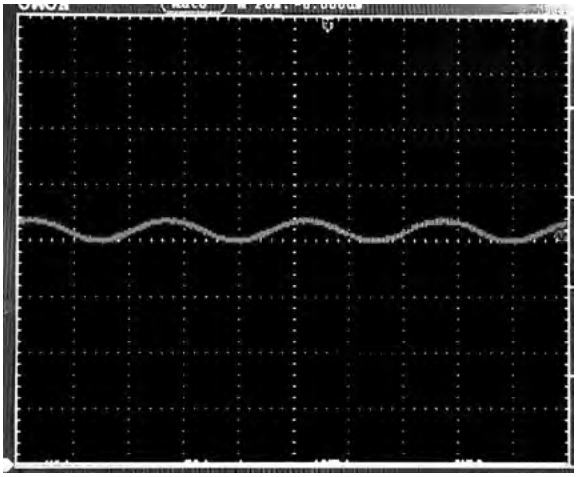

Trace 3

As the detector is moved steadily, the trace keeps changing from trace 2 to trace 3 and back again.

Explain these observations.

(6)

.....

.....

.....

.....

.....

.....

.....

.....

.....

.....

.....

.....

.....

.....

.....

(Total for Question 14 = 8 marks)

DO NOT WRITE IN THIS AREA
DO NOT WRITE IN THIS AREA
DO NOT WRITE IN THIS AREA

15 The 2014 Nobel Prize in Physics was awarded for the development of a light-emitting diode (LED) that emits blue light.
The graph shows how current varies with potential difference (p.d.) for a blue LED.

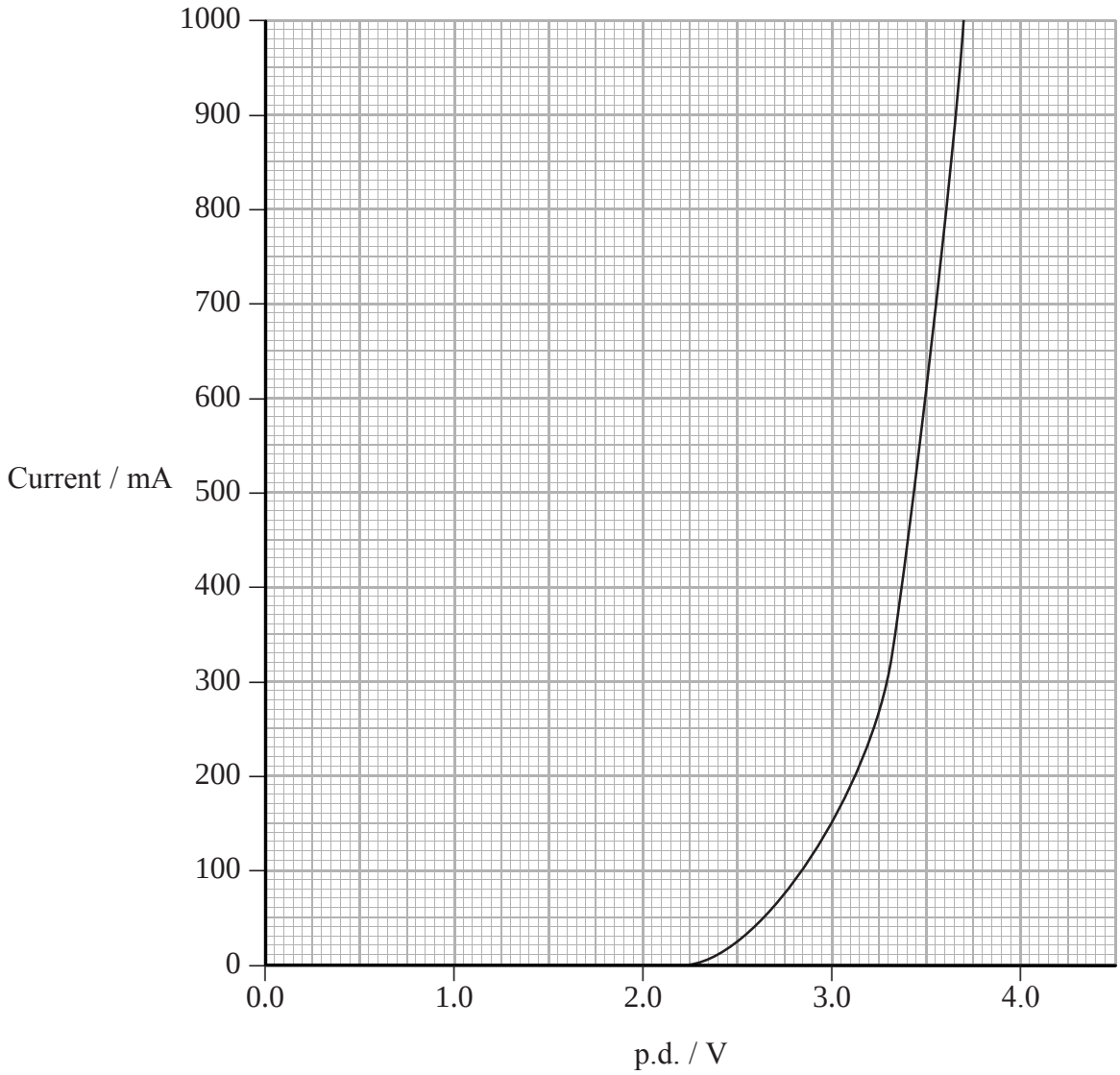

(a) Determine the resistance of the LED when the p.d. across it is 3.5 V.

(2)

.....

.....

.....

.....

.....

Resistance = ...

P 4 6 6 5 1 A 0 1 2 2 4

DO NOT WRITE IN THIS AREA
DO NOT WRITE IN THIS AREA
DO NOT WRITE IN THIS AREA

(b) Describe what happens to the resistance of the LED as the p.d. across it increases from 0 V.

(2)

.....

.....

.....

.....

(c) LEDs can be used to estimate the value of the Planck constant *h*.
LEDs emit photons when electrons fall from the conduction band to the valence band.

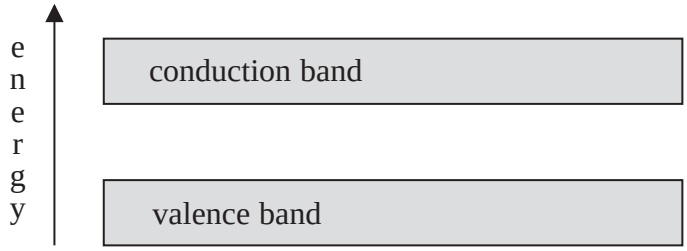

A current is produced and light is emitted only when the p.d. is great enough to supply an electron with energy equal to the gap between the conduction band and the valence band.
The p.d. is increased from zero. The value of p.d. at which there is first a current and light is first emitted is recorded. The frequency of the light is measured at this point.

A student records the frequency of 5.7×10^{14} Hz for the LED producing the graph.
Carry out an appropriate calculation and evaluate the success of this technique at determining the value of the Planck constant.

(4)

.....

.....

.....

.....

.....

.....

.....

.....

.....

.....

(Total for Question 15 = 8 marks)

DO NOT WRITE IN THIS AREA
DO NOT WRITE IN THIS AREA
DO NOT WRITE IN THIS AREA

16 A student carries out an investigation to determine how the resistance of a thermistor varies with temperature.

The thermistor is placed in a beaker of water and an ohmmeter is used to measure resistance for different known temperatures of the water.

(a) The results are shown in the graph.

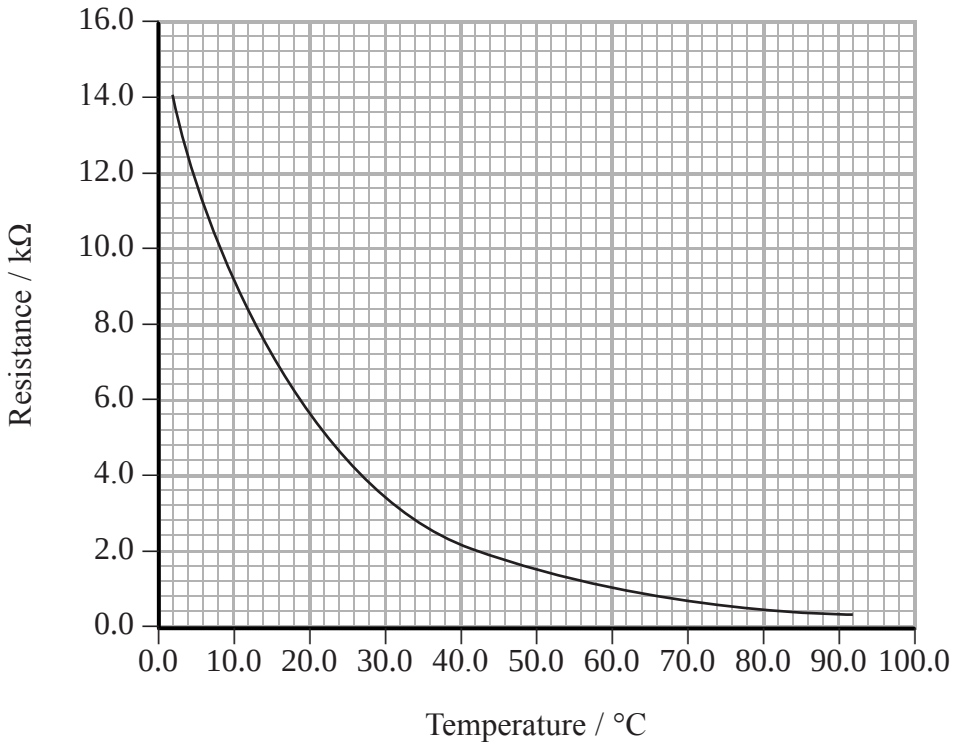

(i) The student states, "This graph is sufficient to show that resistance is inversely proportional to temperature".

Explain why this statement is **not** correct.

(3)

.....

.....

.....

.....

.....

.....

.....

DO NOT WRITE IN THIS AREA
DO NOT WRITE IN THIS AREA
DO NOT WRITE IN THIS AREA

(ii) Explain the graph in terms of the structure of the thermistor.

(4)

.....

.....

.....

.....

.....

.....

.....

.....

.....

.....

(b) The thermistor T is placed in series with a fixed resistor R in the following circuit.

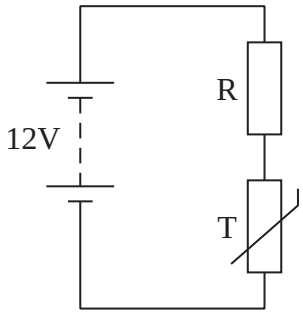

Determine the temperature for which the potential difference across the resistor R will be 8.5 V.

resistance of R = 5.2 kΩ

(3)

.....

.....

.....

.....

.....

.....

Temperature = ...

P 4 6 6 5 1 A 0 1 5 2 4

Turn over

DO NOT WRITE IN THIS AREA
DO NOT WRITE IN THIS AREA
DO NOT WRITE IN THIS AREA

(c) Explain why it is more accurate to use an ohmmeter in this investigation than a separate ammeter and voltmeter.

(2)

.....

.....

.....

.....

.....

(Total for Question 16 = 12 marks)

DO NOT WRITE IN THIS AREA
DO NOT WRITE IN THIS AREA
DO NOT WRITE IN THIS AREA

DO NOT WRITE IN THIS AREA
DO NOT WRITE IN THIS AREA
DO NOT WRITE IN THIS AREA

17 The photograph shows a plant pot with a garden light.

The garden light has a solar cell on top, connected to a battery which is in turn connected to a light-emitting diode (LED). During the day light shines on the solar cell and the battery is charged. When it gets dark the battery supplies current to the LED.

The solar cell is illuminated and its e.m.f. measured by connecting a very high resistance voltmeter across it.

(a) Explain why using a very high resistance voltmeter allows the e.m.f. to be measured directly.

(2)

.....

.....

.....

.....

.....

(b) The solar cell is connected across a load resistor. The potential difference (p.d.) across the resistor and current in the resistor are measured.

p.d. = 1.60 V
current = 12.4 mA
e.m.f. = 2.04 V

(i) Calculate the internal resistance of the solar cell.

(3)

.....

.....

.....

.....

.....

.....

Internal resistance = ...

(ii) Calculate the efficiency of the solar cell at transferring light energy to electrical energy in the load resistor.

area of cell = 1.6×10^{-3} m^2
radiation flux of the incident light = 270 W m^{-2}

(4)

.....

.....

.....

.....

.....

.....

.....

Efficiency = ...

DO NOT WRITE IN THIS AREA
DO NOT WRITE IN THIS AREA
DO NOT WRITE IN THIS AREA

(c) The battery is marked 300 mA h, 1.2 V.

A student says, "300 milliamp hours means that it stores nearly 1100 coulomb of charge."
A teacher says "You have made a correct calculation, but your statement is not correct".

Explain the teacher's comment. You should include a calculation.

(3)

.....

.....

.....

.....

.....

.....

.....

.....

.....

.....

(Total for Question 17 = 12 marks)

DO NOT WRITE IN THIS AREA
DO NOT WRITE IN THIS AREA
DO NOT WRITE IN THIS AREA

18 Some solutions rotate the plane of polarisation of polarised light. The degree of rotation depends on the concentration of the solution. Polarimeters are devices that determine the concentration of a solution by measuring how much the plane of polarisation has been rotated.

(a) Describe what is meant by the plane of polarisation of polarised light.

(2)

.....

.....

.....

.....

(b) The diagram represents the parts of a polarimeter. The polariser and analyser are both polarising filters.

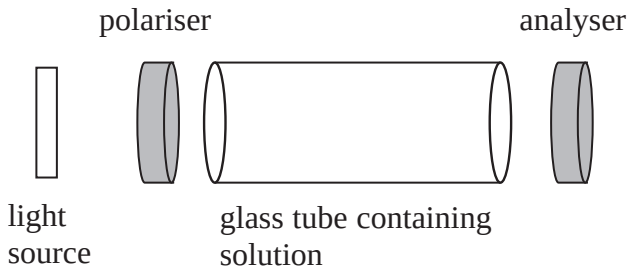

In an experiment to determine the concentration of a solution, the following steps are used.

1. The polarimeter is set up with no solution present. Light from the source is polarised by the polariser.
2. The analyser is rotated until light from the source can no longer be seen.
3. The solution is placed in the tube between the polariser and analyser.
4. The analyser is rotated until light from the source is again no longer seen.
5. The angle through which the analyser is rotated after placing the solution between the filters is measured.

(i) Explain why light from the source can no longer be seen in step 2.

(2)

.....

.....

.....

.....

.....

DO NOT WRITE IN THIS AREA
DO NOT WRITE IN THIS AREA
DO NOT WRITE IN THIS AREA

(ii) When making measurements on a particular solution the angle measured in step 5 is 55°.

Explain why the plane of polarisation of the light may have been rotated by more than 55° and suggest another possible angle of rotation.

(3)

.....

.....

.....

.....

.....

.....

.....

Possible angle of rotation .....

(iii) The experiment would produce the same results if the filters were arranged to give maximum intensity in step 2 and step 4.

Suggest the advantage of rotating the analyser until no light is seen.

(2)

.....

.....

.....

.....

.....

DO NOT WRITE IN THIS AREA
DO NOT WRITE IN THIS AREA
DO NOT WRITE IN THIS AREA

(c) A sodium lamp is frequently used as the light source because the two bright spectral lines at 589.0 nm and 589.6 nm effectively create a monochromatic light source.

Explain how the spectral lines are created with specific wavelengths.

(6)

.....

.....

.....

.....

.....

.....

.....

.....

.....

.....

.....

.....

.....

.....

(Total for Question 18 = 15 marks)

TOTAL FOR SECTION B = 70 MARKS

TOTAL FOR PAPER = 80 MARKS

DO NOT WRITE IN THIS AREA
DO NOT WRITE IN THIS AREA
DO NOT WRITE IN THIS AREA

DO NOT WRITE IN THIS AREA
DO NOT WRITE IN THIS AREA
DO NOT WRITE IN THIS AREA

List of data, formulae and relationships

Acceleration of free fall	$g = 9.81\ \text{m s}^{-2}$	(close to Earth's surface)
Electron charge	$e = -1.60 \times 10^{-19}\ \text{C}$	
Electron mass	$m_e = 9.11 \times 10^{-31}\ \text{kg}$	
Electronvolt	$1\ \text{eV} = 1.60 \times 10^{-19}\ \text{J}$	
Gravitational field strength	$g = 9.81\ \text{N kg}^{-1}$	(close to Earth's surface)
Planck constant	$h = 6.63 \times 10^{-34}\ \text{J s}$	
Speed of light in a vacuum	$c = 3.00 \times 10^{8}\ \text{m s}^{-1}$	

Unit 1

Mechanics

Kinematic equations of motion	$v = u + at$ $s = ut + \frac{1}{2}at^2$ $v^2 = u^2 + 2as$
Forces	$\Sigma F = ma$ $g = F/m$ $W = mg$
Work and energy	$\Delta W = F\Delta s$ $E_k = \frac{1}{2}mv^2$ $\Delta E_{grav} = mg\Delta h$

Materials

Stokes' law	$F = 6\pi\eta rv$
Hooke's law	$F = k\Delta x$
Density	$\rho = m/V$
Pressure	$p = F/A$
Young modulus	$E = \sigma/\varepsilon$ where Stress $\sigma = F/A$ Strain $\varepsilon = \Delta x/x$
Elastic strain energy	$E_{el} = \frac{1}{2}F\Delta x$

Unit 2

Waves

Wave speed	$v = f\lambda$
Refractive index	${}_1\mu_2 = \sin i / \sin r = v_1/v_2$

Electricity

Potential difference	$V = W/Q$
Resistance	$R = V/I$
Electrical power, energy and efficiency	$P = VI$ $P = I^2R$ $P = V^2/R$ $W = VIt$

$$\% \text{ efficiency} = \frac{\text{useful energy output}}{\text{total energy input}} \times 100$$

$$\% \text{ efficiency} = \frac{\text{useful power output}}{\text{total power input}} \times 100$$

Resistivity	$R = \rho l/A$
Current	$I = \Delta Q/\Delta t$ $I = nqvA$
Resistors in series	$R = R_1 + R_2 + R_3$
Resistors in parallel	$\frac{1}{R} = \frac{1}{R_1} + \frac{1}{R_2} + \frac{1}{R_3}$

Quantum physics

Photon model	$E = hf$
Einstein's photoelectric equation	$hf = \phi + \frac{1}{2}mv^2_{max}$

DO NOT WRITE IN THIS AREA
DO NOT WRITE IN THIS AREA
DO NOT WRITE IN THIS AREA