Please check the examination details below before entering your candidate information

Candidate surname	Other names

Pearson Edexcel International Advanced Level

Centre Number | Candidate Number

Monday 11 November 2019

Afternoon (Time: 1 hour 20 minutes) | Paper Reference **WPH06/01**

Physics

Advanced

Unit 6: Experimental Physics

You must have:
Ruler

Total Marks

Instructions

- Use **black** ink or ball-point pen.
- **Fill in the boxes** at the top of this page with your name, centre number and candidate number.
- Answer **all** questions.
- Answer the questions in the spaces provided – *there may be more space than you need.*

Information

- The total mark for this paper is 40.
- The marks for **each** question are shown in brackets – *use this as a guide as to how much time to spend on each question.*
- The list of data, formulae and relationships is printed at the end of this booklet.
- Candidates may use a scientific calculator.

Advice

- Read each question carefully before you start to answer it.
- Try to answer every question.
- Check your answers if you have time at the end.

Turn over

©2019 Pearson Education Ltd.
1/1/1/1/1/1/

P 5 8 3 9 7 A 0 1 2 0

Pearson

Answer ALL questions. Write your answers in the spaces provided.

1 A student determined the density of a metal. She measured a thin square sheet of the metal. The length of each side of the sheet was 30.0 ± 0.1 cm.

She folded the metal sheet in half. She continued to fold the metal sheet in half until it had been folded five times. She used a micrometer to measure the total thickness of the folded sheet.

(a) (i) State one reason for measuring the thickness of the folded sheet rather than an unfolded sheet.

(1)

.....

.....

(ii) Explain one other technique she should use to ensure that the measurement of the thickness of the folded sheet is accurate.

(2)

.....

.....

.....

.....

.....

.....

DO NOT WRITE IN THIS AREA DO NOT WRITE IN THIS AREA DO NOT WRITE IN THIS AREA

(b) The micrometer scale reading for each measurement is shown below.

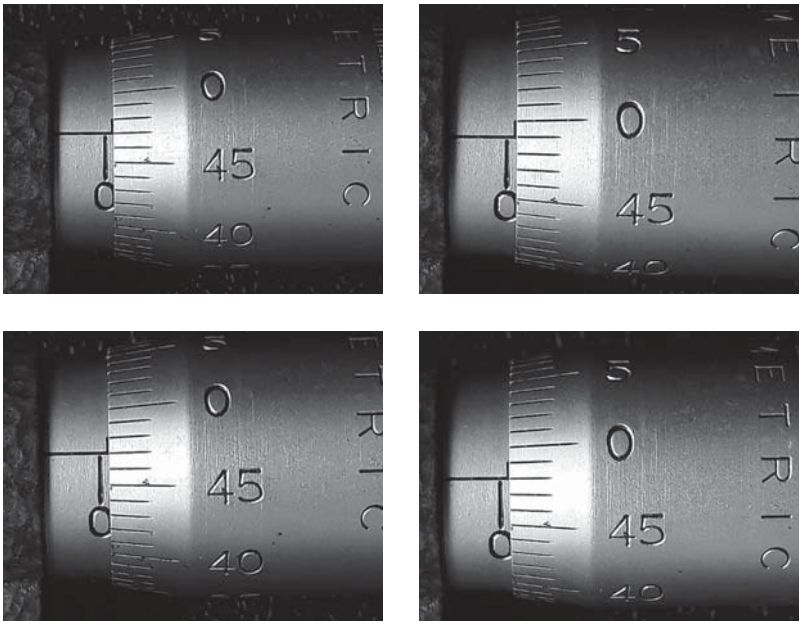

(i) Record the measurements in the table.

(2)

Total thickness /			

(ii) Calculate the mean thickness and the corresponding uncertainty.

(2)

.....

.....

.....

.....

Mean thickness = ... ± .....

DO NOT WRITE IN THIS AREA
DO NOT WRITE IN THIS AREA
DO NOT WRITE IN THIS AREA

(c) The student weighed the folded sheet and recorded the mass as 3.62 ± 0.01 g.

(i) Calculate a value for the density of the metal in $kg\,m^{-3}$.

(2)

.....

.....

.....

.....

.....

Density = ... $kg\,m^{-3}$

(ii) It is suggested that the metal is aluminium, which has a density of $2710\,kg\,m^{-3}$.

Deduce whether the metal could be aluminium.

(3)

.....

.....

.....

.....

.....

.....

.....

.....

(Total for Question 1 = 12 marks)

DO NOT WRITE IN THIS AREA
DO NOT WRITE IN THIS AREA
DO NOT WRITE IN THIS AREA

DO NOT WRITE IN THIS AREA
DO NOT WRITE IN THIS AREA
DO NOT WRITE IN THIS AREA

BLANK PAGE

2 A student poured 100 cm^3 of hot water into a beaker. The graph shows how the temperature θ of the water varied with time t.

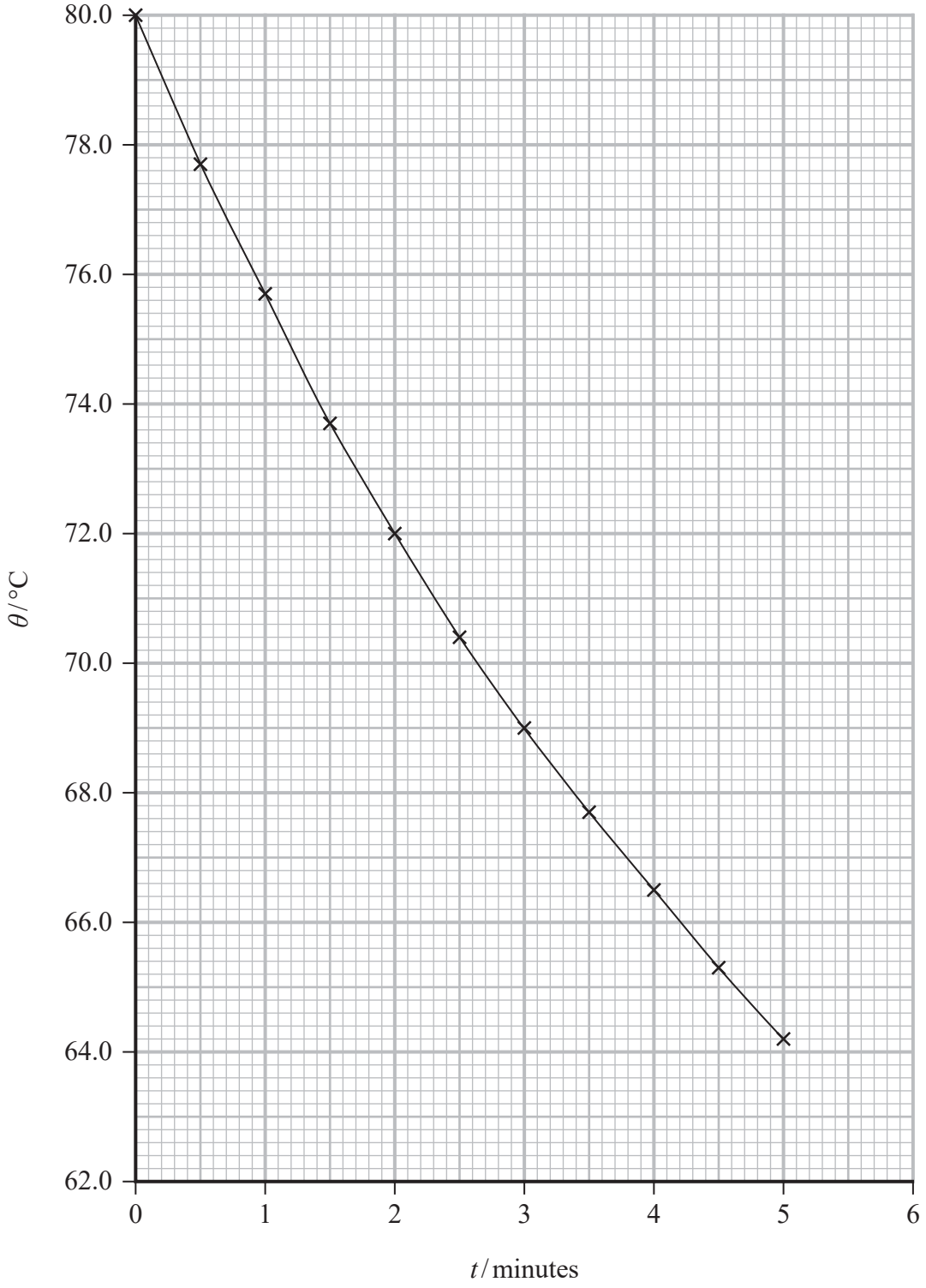

DO NOT WRITE IN THIS AREA
DO NOT WRITE IN THIS AREA
DO NOT WRITE IN THIS AREA

(a) (i) Determine the gradient $\Delta\theta/\Delta t$ of the graph when $\theta = 70.0\,°C$.

(2)

.....

.....

.....

.....

$\Delta\theta/\Delta t$ = ...

(ii) Hence calculate the rate at which the water is transferring thermal energy to the surroundings when $\theta = 70.0\,°C$.

density of water = $1.0\,g\,cm^{-3}$

specific heat capacity of water = $4.2\,J\,g^{-1}K^{-1}$

(2)

.....

.....

.....

.....

Rate = ...

DO NOT WRITE IN THIS AREA
DO NOT WRITE IN THIS AREA
DO NOT WRITE IN THIS AREA

(b) The student set up another experiment using an identical beaker. In order to test the effects of insulation, the beaker was wrapped in cotton wool. He collected data to compare how the water cooled in the two experiments.

(i) State one control variable in these experiments.

(1)

.....

.....

(ii) Describe how the results of the two experiments should be compared.

(2)

.....

.....

.....

.....

(iii) Explain whether repeat measurements are appropriate for this experiment.

(2)

.....

.....

.....

.....

(Total for Question 2 = 9 marks)

DO NOT WRITE IN THIS AREA
DO NOT WRITE IN THIS AREA
DO NOT WRITE IN THIS AREA

DO NOT WRITE IN THIS AREA
DO NOT WRITE IN THIS AREA
DO NOT WRITE IN THIS AREA

BLANK PAGE

3 The force F between two bar magnets placed a distance x apart can be measured using the apparatus shown.

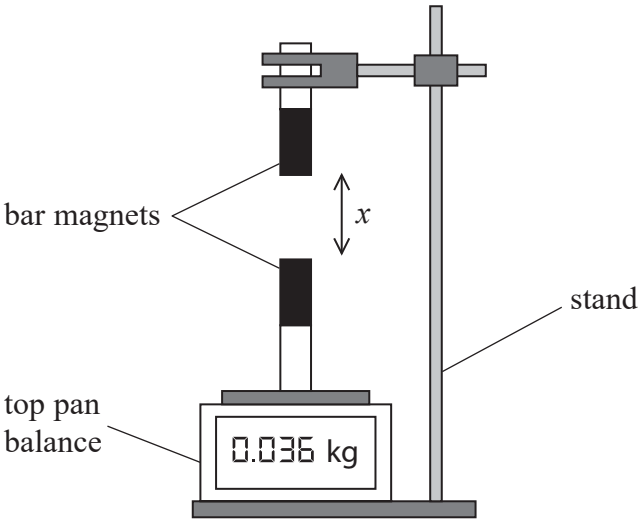

A student predicts that F varies with x according to the relationship

$$F = ax^b$$

where a and b are constants.

(a) Describe how the apparatus could be used to investigate this relationship.
Your description should include any additional apparatus that may be required.

(3)

.....

.....

.....

.....

.....

.....

DO NOT WRITE IN THIS AREA
DO NOT WRITE IN THIS AREA
DO NOT WRITE IN THIS AREA

(b) Describe how the data collected in (a) should be used to verify this relationship.

(3)

.....

.....

.....

.....

.....

.....

(Total for Question 3 = 6 marks)

DO NOT WRITE IN THIS AREA
DO NOT WRITE IN THIS AREA
DO NOT WRITE IN THIS AREA

BLANK PAGE

DO NOT WRITE IN THIS AREA
DO NOT WRITE IN THIS AREA
DO NOT WRITE IN THIS AREA

4 A student investigated the vertical oscillations of a damped mass-spring system using the apparatus shown.

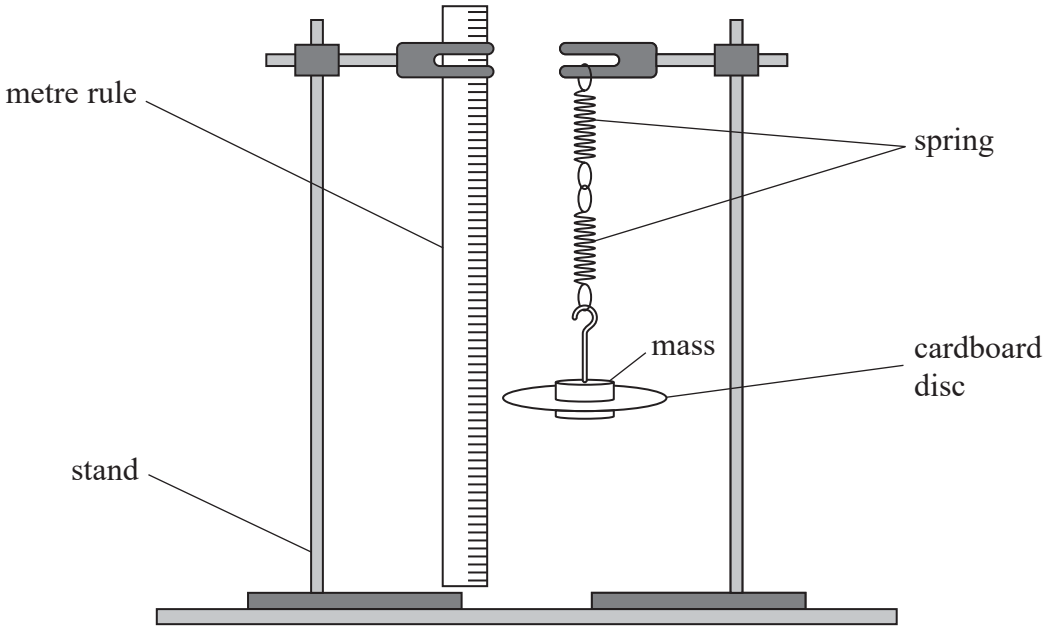

(a) State what is meant by damping.

(2)

.....

.....

.....

.....

(b) It is suggested that the relationship between the amplitude A and the number n of the oscillations is

$$A = A_0 e^{-\lambda n}$$

where A_0 is the initial amplitude of the oscillation and λ is the decay constant.

Explain why a graph of $\ln A$ against n can be used to determine a value for λ.

(2)

.....

.....

.....

.....

DO NOT WRITE IN THIS AREA
DO NOT WRITE IN THIS AREA
DO NOT WRITE IN THIS AREA

(c) The student pulled the mass down a distance of 15.0 cm from the equilibrium position.

He released the mass and recorded the amplitude every oscillation for 6 oscillations.

He repeated the experiment several times and calculated the mean amplitudes as shown.

n	mean A / cm	
1	13.8	
2	12.5	
3	11.8	
4	11.5	
5	10.8	
6	10.3	

(i) Plot a graph of $\ln A$ against n on the grid. Use the additional column to record your processed data.

(5)

(ii) Use your graph to determine a value for λ.

(2)

.....

.....

.....

.....

λ = ...

(d) The student modified the experiment by using a data logger attached to a position sensor.

Explain how this may lead to a more accurate value for A.

(2)

.....

.....

.....

.....

DO NOT WRITE IN THIS AREA DO NOT WRITE IN THIS AREA DO NOT WRITE IN THIS AREA

DO NOT WRITE IN THIS AREA
DO NOT WRITE IN THIS AREA
DO NOT WRITE IN THIS AREA

(Total for Question 4 = 13 marks)

TOTAL FOR PAPER = 40 MARKS

BLANK PAGE

DO NOT WRITE IN THIS AREA
DO NOT WRITE IN THIS AREA
DO NOT WRITE IN THIS AREA

DO NOT WRITE IN THIS AREA
DO NOT WRITE IN THIS AREA
DO NOT WRITE IN THIS AREA

List of data, formulae and relationships

Acceleration of free fall	$g = 9.81\ \text{m s}^{-2}$	(close to Earth's surface)
Boltzmann constant	$k = 1.38 \times 10^{-23}\ \text{J K}^{-1}$	
Coulomb's law constant	$k = 1/4\pi\varepsilon_0$	
	$= 8.99 \times 10^{9}\ \text{N m}^2\ \text{C}^{-2}$	
Electron charge	$e = -1.60 \times 10^{-19}\ \text{C}$	
Electron mass	$m_e = 9.11 \times 10^{-31}\ \text{kg}$	
Electronvolt	$1\ \text{eV} = 1.60 \times 10^{-19}\ \text{J}$	
Gravitational constant	$G = 6.67 \times 10^{-11}\ \text{N m}^2\ \text{kg}^{-2}$	
Gravitational field strength	$g = 9.81\ \text{N kg}^{-1}$	(close to Earth's surface)
Permittivity of free space	$\varepsilon_0 = 8.85 \times 10^{-12}\ \text{F m}^{-1}$	
Planck constant	$h = 6.63 \times 10^{-34}\ \text{J s}$	
Proton mass	$m_p = 1.67 \times 10^{-27}\ \text{kg}$	
Speed of light in a vacuum	$c = 3.00 \times 10^{8}\ \text{m s}^{-1}$	
Stefan-Boltzmann constant	$\sigma = 5.67 \times 10^{-8}\ \text{W m}^{-2}\ \text{K}^{-4}$	
Unified atomic mass unit	$u = 1.66 \times 10^{-27}\ \text{kg}$	

Unit 1

Mechanics

Kinematic equations of motion	$v = u + at$ $s = ut + \frac{1}{2}at^2$ $v^2 = u^2 + 2as$
Forces	$\Sigma F = ma$ $g = F/m$ $W = mg$
Work and energy	$\Delta W = F\Delta s$ $E_k = \frac{1}{2}mv^2$ $\Delta E_{grav} = mg\Delta h$

Materials

Stokes' law	$F = 6\pi\eta rv$
Hooke's law	$F = k\Delta x$
Density	$\rho = m/V$
Pressure	$p = F/A$
Young modulus	$E = \sigma/\varepsilon$ where Stress $\sigma = F/A$ Strain $\varepsilon = \Delta x/x$
Elastic strain energy	$E_{el} = \frac{1}{2}F\Delta x$

Unit 2

Waves

Wave speed	$v = f\lambda$
Refractive index	${}_1\mu_2 = \sin i / \sin r = v_1/v_2$

Electricity

Potential difference	$V = W/Q$
Resistance	$R = V/I$
Electrical power, energy and efficiency	$P = VI$ $P = I^2R$ $P = V^2/R$ $W = VIt$

$$\% \text{ efficiency} = \frac{\text{useful energy output}}{\text{total energy input}} \times 100$$

$$\% \text{ efficiency} = \frac{\text{useful power output}}{\text{total power input}} \times 100$$

Resistivity	$R = \rho l/A$
Current	$I = \Delta Q/\Delta t$ $I = nqvA$
Resistors in series	$R = R_1 + R_2 + R_3$
Resistors in parallel	$\frac{1}{R} = \frac{1}{R_1} + \frac{1}{R_2} + \frac{1}{R_3}$

Quantum physics

Photon model	$E = hf$
Einstein's photoelectric equation	$hf = \phi + \frac{1}{2}mv^2_{max}$

DO NOT WRITE IN THIS AREA
DO NOT WRITE IN THIS AREA
DO NOT WRITE IN THIS AREA

DO NOT WRITE IN THIS AREA
DO NOT WRITE IN THIS AREA
DO NOT WRITE IN THIS AREA

Unit 4

Mechanics

Momentum	$p = mv$
Kinetic energy of a non-relativistic particle	$E_k = p^2/2m$
Motion in a circle	$v = \omega r$ $T = 2\pi/\omega$ $F = ma = mv^2/r$ $a = v^2/r$ $a = r\omega^2$

Fields

Coulomb's law	$F = kQ_1Q_2/r^2$ where $k = 1/4\pi\varepsilon_0$
Electric field	$E = F/Q$ $E = kQ/r^2$ $E = V/d$
Capacitance	$C = Q/V$
Energy stored in capacitor	$W = \frac{1}{2}QV$
Capacitor discharge	$Q = Q_0 e^{-t/RC}$
In a magnetic field	$F = BIl \sin\theta$ $F = Bqv \sin\theta$ $r = p/BQ$
Faraday's and Lenz's laws	$\varepsilon = -d(N\phi)/dt$

Particle physics

Mass-energy	$\Delta E = c^2 \Delta m$
de Broglie wavelength	$\lambda = h/p$

Unit 5

Energy and matter

Heating	$\Delta E = mc\Delta\theta$
Molecular kinetic theory	$\frac{1}{2}m\langle c^2\rangle = \frac{3}{2}kT$
Ideal gas equation	$pV = NkT$

Nuclear physics

Radioactive decay	$\mathrm{d}N/\mathrm{d}t = -\lambda N$
	$\lambda = \ln 2/t_{\frac{1}{2}}$
	$N = N_0 e^{-\lambda t}$

Mechanics

Simple harmonic motion	$a = -\omega^2 x$ $a = -A\omega^2 \cos \omega t$ $v = -A\omega \sin \omega t$ $x = A \cos \omega t$ $T = 1/f = 2\pi/\omega$
Gravitational force	$F = Gm_1m_2/r^2$

Observing the universe

Radiant energy flux	$F = L/4\pi d^2$
Stefan-Boltzmann law	$L = \sigma T^4 A$ $L = 4\pi r^2 \sigma T^4$
Wien's law	$\lambda_{max} T = 2.898 \times 10^{-3}$ m K
Redshift of electromagnetic radiation	$z = \Delta\lambda/\lambda \approx \Delta f/f \approx v/c$
Cosmological expansion	$v = H_0 d$

DO NOT WRITE IN THIS AREA
DO NOT WRITE IN THIS AREA
DO NOT WRITE IN THIS AREA